TOMOE®
Excellence through hydrodynamics

2015/2016

GENERAL CATALOG

Valves & Actuator Selection Guide



TOMOE VALVE CO., LTD.

TOMOE®

EXCELLENCE THROUGH HYDRODYNAMICS

TOMOE VALVE WebSite

www.tomoevalve.com

STRATEGIC, GLOBAL AND LOCAL RESOURCES

TOMOE's manufacturing, sales and distribution facilities are located strategically throughout the world.
It provides industry with a direct link to the most advanced range of products
and highest levels of customer support available.



INDEX

Standard Specifications		1
Approvals		2
Handling Precautions		3
Butterfly Valves Selection Guide		
Triple Offset Butterfly Valves	TRITEC	17
	TT2	25
High Performance Butterfly Valves	334A	59
	302A/303Q	79
	304A/304Q	107
	302Y/304Y	129
	304M(HLV)	149
Rotary Control Valves	507V/508V	153
	DTM	187
Chemically Resistant Butterfly Valves	846T/847T/847Q	189
	841T/842T	211
Rubber Seated Valves	700Z	227
	700G/704G/705G	239
	700GB	287
	731P/732P/732Q/752W	297
	71LG	329
	700E/700K/700S	335
	704G/722F/720F	347
	KRV	375
	227P	377
Bata-Check	MKT	381
	903C	389
Actuator Selection Guide		
Motorized Actuators	New ELMY	393
	New MICOM ELMY Ⅲ	405
	PMK-SRM	413
	SRJ	417
	LTKD	425
Pneumatic Actuators	New T-DYNAMO	429
	TGA	451
	TG-S	471
	3C	485
	Diaphragm	486
Hydraulic Cylinder	Hydraulic cylinder	487
Manual Actuators	Manual Actuators	488
Data		

- Valve Types and Features
- Valve Sizing Procedures
- Cv Value Calculation
- Conversion Formula for Reference
- Guidance for Vacuum Use
- Velocity Calculation
- Noise Prediction Methods and Countermeasures
- Calculation of Estimated Cavitation
- Face to Face Dimensions
- Unit Conversion
- Physical Properties
- Flange Standards

Standard Specifications

Standard Specifications

		Pressure (MPa)	Temperature (℃) ※1 -196 -100 -46 0 100 200 300 400 500 600 700	Valve Nominal size (mm)	Standard Materials Body	Disc	Seat	Approvals / Compliances
The Ultimate Process Valves	Tritec	42.5	-196 to 700	80 to 1200	C.S. S.S.	C.S. S.S.	S.S. GRAPHITE	FS CE
	TT2	5.1	-29 to 600	80 to 600	C.S. S.S.	C.S. S.S.	S.S. GRAPHITE	FS CE
High Performance Butterfly Valves	334A	5.1	-29 to 232	50, 80 to 600	C.S. S.S.	S.S.	RPTFE	FS CE
	302A	2.0	-29 to 600	80 to 600	C.S. S.S.	S.S.	S.S.	FS CE
	303Q	2.0	-29 to 600	80 to 600	C.S. S.S.	S.S.	S.S.	FS CE
	304A	2.0	-29 to 232	80 to 600	C.S. S.S.	S.S.	RPTFE	CE
	304Q	2.0	-29 to 232	80 to 600	C.S. S.S.	S.S.	RPTFE	CE
	302Y	2.0	-20 to 250	40 to 300	D.I. S.S.	S.S.	S.S.	CE
	304Y	2.0	-20 to 200	40 to 300	D.I. S.S.	S.S.	RPTFE GRAPHITE	CE
	304M (HLV)	0.7	-30 to 230	650 to 1000	C.S. S.S.	C.S. S.S.	RPTFE	
Rotary Control Valves	507V	1.6	-50 to 400	50 to 400	C.S. S.S.	S.S.	——	CE
	508V	1.6	-20 to 120	50 to 200	D.I.	S.S.	EPDM ※2 (OPTION: NBR CORE-Reinforced)	
		1.0	-20 to 120	250 to 600	D.I.	S.S.	EPDM ※2 (OPTION: NBR CORE-Reinforced)	
	DTM	5.1	-29 to 400	80 to 300	WCB S.S.	S.S.	RPTFE ※3	
Chemically Resistant Butterfly Valves	846T	1.0	-20 to 200	65 to 300	D.I.	S.S. PPS	PFA	CE
	847T	1.0	-20 to 200	50 to 300	D.I.	PFA	PFA PTFE	CE
	847Q	1.0	-20 to 200	50 to 300	D.I.	PFA	PFA PTFE	CE
	841T	0.7	-10 to 100	350 to 600	D.I.	S.S.	PTFE	
	842T	0.7	-10 to 100	350 to 600	D.I.	PTFE	PTFE	CE
Rubber Seated Valves	700Z	1.0	-20 to 120	40 to 300	ALLOY DIE-CAST	S.S. PPS (40～200mm)	EPDM ※2	JIS
	700G	1.0	-20 to 120	40 to 600	D.I. C.I. (350～600)	S.S. D.I. (80～600mm) S.S. (50～600mm)	NBR EPDM ※2	JIS CE NK
	704G Full Lugged	1.0	-20 to 120	50 to 600	D.I.	S.S. PPS (50～200mm)	NBR EPDM ※2	JIS CE NK LR ABS
	705G	1.0	-20 to 120	50 to 600	D.I.	S.S. PPS (50～200mm)	NBR EPDM ※2	JIS CE NK LR ABS
	731P	1.6	-20 to 120	50 to 600	D.I.	S.S.	NBR EPDM ※2	JIS CE
	732P	2.0	-20 to 120	50 to 600	D.I.	S.S.	NBR EPDM ※2	JIS CE
	71LG	1.6	-10 to 80	50 to 600	D.I.	S.S.	NBR EPDM ※2	
	700E	1.0	-20 to 120	650 to 1350	C.I.	D.I. (HARD CHROME PLATING) S.S.	NBR EPDM ※2	NK
	700K	1.0	-20 to 120	650 to 1350	C.I.	D.I. (HARD CHROME PLATING) S.S.	NBR EPDM ※2	NK
	700S	1.0	-20 to 120	650 to 1350	C.I.	D.I. (HARD CHROME PLATING) S.S.	NBR EPDM ※2	NK
	722F	1.0	-20 to 120	125 to 800	C.S. (OPTION：D.I.)	S.S. D.I.	NBR EPDM ※2	NK LR ABS
	720F	1.0	-20 to 120	850 to 1350	C.S. (OPTION：D.I.)	S.S. D.I.	NBR EPDM ※2	NK LR ABS
	KRV	0.6	0 to 100	1000 to 2000	D.I. C.S.	S.S. D.I.	NBR EPDM ※2	
	227P	1.6	-10 to 80	650 to 2400	D.I. C.S.	S.S. AlBr	NBR EPDM ※2	
Bata-Check	MKT 907H / 908H	2.0	0 to 100	50 to 300	D.I. S.S.	S.S.	NBR EPDM ※2 RPTFE	
	903C	1.0	-20 to 120	50 to 300	C.I.	AlBr	NBR ※2 (OPTION: EPDM)	NK

■Remarks: JIS JIS B 2032 FS Fire Safe Approvals(API607 4th Edition) CE CE Marking NK Nippon Kaiji Kyokai (NK) LR Lloyd's Register of Shipping ABS American Bureau of Shipping

※Please contact us if needed any detailed information.

※1 -46℃ service for Tritec is available with suitable material.
Please consult our sales for the service condition lower than -46℃.
※2 EPDM/NBR: If the fluid contains chlorine, the seat ring could be corroded early by combined factors such as concentration and temperature. For further information please contact our sales staff. In case of chlorine-containing fluid, 846T or 847T (containing fluorine resin) is recommended depending on combined factors such as concentration.
※3 In case of RPTFE, maximum operating temperature should not exceed 230℃.

Approvals

ISO 9001

Due to our highly-evaluated quality system throughout all processes across the entire company, from designing and development to order acceptance, procurement, manufacturing, inspection and shipment, registration of the ISO9001 international standard for quality management systems has been approved.

※The certification authority : Tomoe Valve Co., Ltd. (Japan)..... JIC
Shanghai Tomoe Valve Co., Ltd. (China)..... Lloyd's
Tomoe Valve Limited (UK)..... Lloyd's
PT. Tomoe Valve Batam (Indonesia)..... Lloyd's

Certifying authority	Certifying authority accredited by JICQA (JIC Quality Assurance Ltd.), Dutch Accreditation Council (RvA) and Japan Accreditation Board
Date of registration	September 11, 1995
Registration number	No.0091
Scope of registration	Designing, development and servicing of butterfly valves, actuators, and accessories

ISO9001 is a standard for a quality system for the entire company, whose scope ranges from quality policy of managers and clarification of responsibility to development, designing, order acceptance, procurement, manufacturing, inspection, shipment, servicing and even education and training. This standard requires systems that supply high-quality products trusted by users.

For fire safety

The symbol on the left indicates that the product is certified by the Fire Equipment and Safety Center of Japan; it is displayed on each product.
Note: When you contact us, please ask our sales staff for "fire-fighting" products.

700ZF
◇Certification Number VA-115

700G
◇Certification Number VA-065-1

702G
◇Certification Number VA-066-1

731P(50～300mm)
◇Certification Number VA-068-1

732P(50～300mm)
◇Certification Number VA-069-1

302Y
◇Certification Number VA-070

334A
◇Certification Number VA-103

903C
◇Certification Number VA-078

906C
◇Certification Number VA-080

907H
◇Certification Number VA-011

- Dry models other than 302Y cannot be used in places where products are exposed to flame or in environments where pipes are constantly filled with gas.
  However, these models can be used if covered with fire-resistant material such as Rockwool*1, of thickness more than 50 mm, to avoid direct flame.

*1 For selection of Rockwool, please inquire with fire authorities in your district.

- In environments such as above, please use 302Y (dry model).
- Rubber seated valves whose certification numbers have no suffixed numbers after hyphens are certified as wet models.

Waterworks approvals

700G
◇Approved by Singapore public utility board.
License Number WE 92413/29

779J
◇Registration number E-306
Certified by Japan Water Works Association

Marine approvals

Nippon Kaiji Kyokai (NK)	NK 98FV601B	704G, 722F
	NK 93FV601B	700S, 700E, 720F
	NK 94FV601B	337Y
	NK 92FV603B	700G, 901C, 903C
	NK 93FV606B	705G
	NK 05FV601B	700Z(Application planned)
	NK 09FV601B	302Y, 304Y, 302A, 304A, TT2AFR
	NK 10FV604B	907H, 908H
Lloyd's Register of Shipping	LR 00/10044	704G, 722F
	LR 96/10037	705G
American Bureau of Shipping	A.B.S 02-YO230943/1-PDA	705G, 704G, 704R, 705R, 722F, 720F
	A.B.S 09-YO490943/2-PDA	302Y, 304Y, 302A, 304A, TT2AFR
Bureau Veritas (France)	02572/FO BV	720F
	09498/A0 BV	704G
	09499/A0 BV	722F

Fire safe approvals

302A・334A
◇API Std 607 4th Edition

TOMOE TRITEC
◇BS 6755 Part 2/API 6FA and API Std 607 4th/5th Edition

TT2
◇API Std 607 4th/5th Edition

Handling Precautions

Butterfly Valves (common to all models)

For improvement of the product, dimensions or material may be changed without notice.
Please contact us for up-to-date information

Storage Conditions

- To protect the seat rings, do not unpack valves until you are ready to install them. If a valve remains unpacked for a long period of time, dust or other particles may enter the valve and cause seat leakage.
- For temporary storage before installing or for long-term storage, keep valves in the vinyl bag in which they came and store them indoors in a cool, well-ventilated location (temperature of -10 to 60C and humidity of 70% or less). Keep the valve away from dusty locations and take care in protecting the valve and actuator from bearing excessive weights.

Installing Valves

- Valves can be installed in any orientation, to allow for the easiest possible operation of the valve. However, be careful of the orientation of the stem when your pipe layout is one of those covered on next page.

Piping Instructions

- Verify the materials of the seat ring and disc of the valve before installation.
- When installing a butterfly valve directly to a check valve or pump, install an extension or spacer to prevent the disc of the butterfly valve from contacting the check valve or pump.
- Install the valve only after completing all welding operations around the valve to prevent damage caused by the solder and other welding materials.
- After welding is performed on a flange, wait until it has sufficiently cooled before installing the valve. Never perform welding on a flange with the valve installed.
- In the surrounding piping, make sure that no welding residue, pipe waste, scaling, or dust remain in the pipe. Clean the inside of the pipes if necessary prior to installation.
- Before blowing air to remove any foreign matter in the piping, install an extension tube with face-to-face dimensions equal to that of the valve in place of the valve. Do not blow air with the valve installed in the pipe, for this may damage the seat ring.
- Clean the mating surface of the flange with compressed air before installation. Remove rust or foreign particles with cleaning alcohol or a neutral detergent.
- With a zinc plated flange, attention must be paid to avoid flange leakage due to an uneven surface of the flange.
- Make sure that there is no warpage in the flange, misalignment, or damage to the mating surface of the flange.
- Be sure to properly align the valve and mounting flanges.
- Install the jack bolts taking care not to damage the seat ring of the valve and adjust the face-to-face dimensions. The face-to-face dimensions should be such that the piping is spread open 3 to 5mm to allow the valve to be inserted.
- If possible, avoid mounting the actuator with it facing downward. Especially for valve sizes of 350mm or larger, where the lower portion of the valve stem bears thrust loads, never install the actuator facing downward.

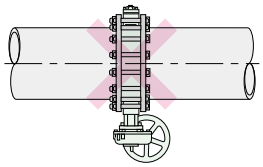

- After centering the pipes, insert bolts at the proper locations so that the bottom of the valve can rest upon them to prevent the valve from falling through.
- Before tightening the installation bolts, make sure that the disc of the valve does not contact any portion of the flange when it is fully opened.
- Tighten the installation bolts to a torque of no more than 60Nm (6kgfm).
- The installation bolts should be tightened evenly and in the proper sequence. Tighten one bolt a small amount, and then proceed to another bolt that is located on the other side. Proceed tightening each bolt a little at a time by crisscrossing across the flange to insure well-balanced tightening.
- Upon completion of installation, fully open and close the valve once again to make sure that the disc does not touch the piping or gasket.

Operational Instructions

- Prior to operation, clean the outside of the piping with compressed air, and the inside of the piping with running water.
- If the valve is to be used at an opening angle of 30 or under for flow constriction, consult us beforehand.

Also...

- After installation, open and close the valve once every two weeks if the valve is not used for a long period of time, and open and close the valve a few times before starting actual operation.
- For pressure tests of the piping (where pressures exceed the rated pressure), always keep the valve fully open. Never fully close the valve or use it as a blind flange.
- If the actuator is a manual gear, pneumatic cylinder, electric motor, diaphragm or other similar type, and the ambient temperature is extremely high, it may be necessary to change the O-rings and other rubber components using special materials, or change the motor or solenoids to those with higher insulation levels, so be sure to consult us beforhand.
- Always operate lock lever, worm gear, or center handle type actuators by hand. Never use an extension bar on the lever or a wheel key on the gear handle, for they might damage the handle or lever. Unlike gate valves or globe valves, tightening with a high torque is unnecessary.
- Do not loosen the installation bolts or other bolted components before relieving the system pressure.
- To avoid any damage, which may be caused by vibration of piping to a valve, provide a 3D to 5D straight distance from any nozzle orifice or control valve which may be installed at the upper stream of the piping line. (See correct example of a combination of control valve and stop a valve on the right.)
- A valve 350mm or over may have a nut and bolt on the center of the bottom cover to support the weight of disc. Please do not touch it.
- Do not touch any open/close adjusting bolts and screws on any actuators (gear/pneumatic cylinder/electric motor) as these were pre-adjusted.

● We will indicate " level " of danger caused by neglecting these cautions as the following:

⚠ **CAUTION**	This mark indicates " possibility of serious injury to personnels or damage to components "

● We will indicate following marks for your attention.

⊘	This mark indicates that " you must not "

⚠ CAUTION

We will indicate " level " of danger caused by neglecting these cautions as the following:

⚠ CAUTION	this mark indicates " possibility of serious injury to personnels or damage to components "

We will indicate following marks for your attention.

⊘	this mark indicates that " you must not "

⊘ **Forcing the valve between the pipe flanges may cause the seat ring to peel off and cause a leak.**

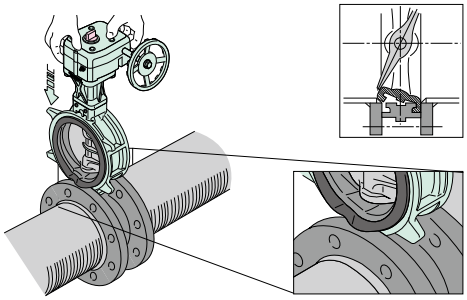

⊘ **Do not touch the stopper bolts of the gear box.**

The closed position for the valve will change and result in leaking.

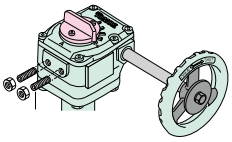

⊘ **Do not throw or mishandle the valve. Do not stand on or put objects on the actuator.**

⊘ **Below are causes of damage to the valve seat or leakage from the flanges.**

• Excessive Weld
The resulting oversized inner pipe diameter may cause a flange leak.

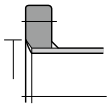

• Sharp Edges
May cause damage to the seat ring.

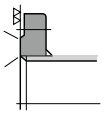

• Rough Surface from Grinding
May cause a flange leak.

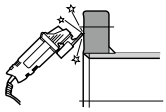

Do not install a valve to a flange that has just been welded.

⊘ **Wait until it has sufficiently cooled before installing the valve. Never perform welding on a flange with the valve installed.**

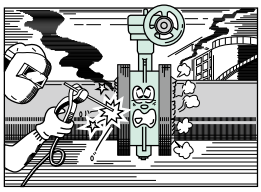

Installing a valve at a pump outlet

● **Incorrect Installation**

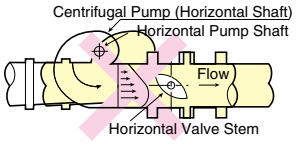

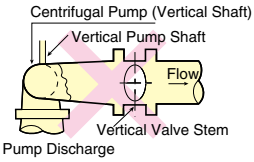

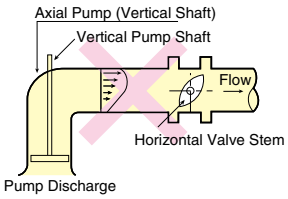

● **Correct Installation**

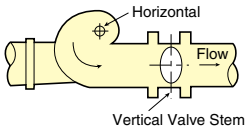

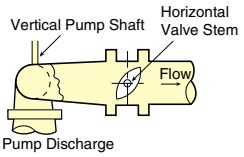

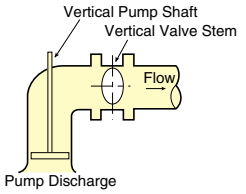

Installing at an elbow or a reducer

● **Incorrect Installation**

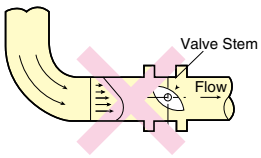

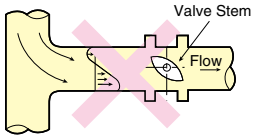

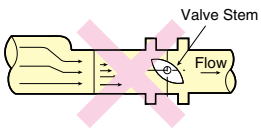

● **Correct Installation**

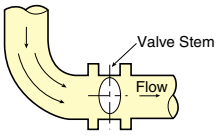

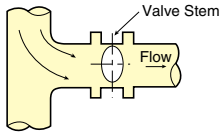

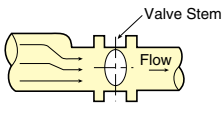

Combination of a control valve and stop valve

● **Incorrect Installation**

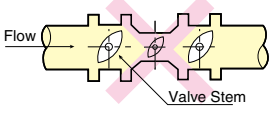

All the valve stems have the same orientation.

● **Correct Installation**

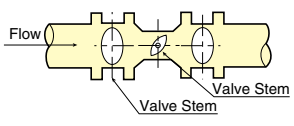

The orientation of the valve stems is alternating.

Handling Precautions

High Performance Butterfly Valves

TT2

334A

Tom Disco® 302A/304A

Tom Disco® 302Y/304Y

304M(HLV)

Storage Conditions

- Since the PTFE used in the seat rings is easily damaged, do not remove the protective covers on both sides of the valves until you are ready to install the valve (dust or other foreign particles may enter the valve and cause leakage).

Precautions Regarding Piping

- If valve models 337Y/336Y are used in temperatures exceeding 300C, use the specified spiral-wound gaskets.
- The gaskets must be properly aligned with the pipe flanges and the valve.
- Do not use PTFE-covered gaskets or soft gaskets such as rubber gaskets.
- If the actuator is installed so that its weight falls on the piping (e.g. when horizontally installed), install supports for the actuator and bonnet (especially in the case of extension bonnet and fin bonnet types).
- When fluids over 100C are being used, install insulating materials to the valve body where possible.

Installation Instructions

- Check the direction of flow prior to installation.
- Do not apply pressure to or lean on the lever or gear handle during installation.
- Do not use plastic flanges.
- When installing or removing the valve, keep the disc fully closed.
- Before installation, clean the inside of the pipe and flange surface. Make sure that no welding residue, rust, scaling, or dust remain in the pipe. If possible, install an extension tube with face-to-face dimensions equal to that of the valve in place of the valve and blow the inside of the piping clean with compressed air. Then clean the flanges and re-install the valve.
- Never weld on the up-or down-stream pipes while the valve is installed.
- To prevent stress concentration during the installation process, fix the up-and down-stream flanges after installing the valve in the flange.

Operation Instructions

- If leakage from the gland occurs during operation, immediately retighten the gland nuts. The nuts should be tightened alternately and evenly in a diagonal pattern, to avoid imbalance.
- For room temperature or cold to hot heat cycles, or batch flow such as form the base valve of a steam header, be sure to insulate the valve body. Also, warm up the valve before starting operation.

Rearrangement of Actuator

- When removing and remounting the actuator to change its orientation at the job site, align the marks (punch marking) on the top of the valve and the top of the valve stem to ensure proper positioning for the fully-closed position.

Replacement of Packing

- When replacing gland packing or seat ring, close the base valve and remove the valve from the piping.

Also...

- Before using a valve after it has not been used for a long period of time, open and close the handle once or twice.

Rotary Control Valves

Installation Instructions

- For rotary control valves (including butterfly valves), basically the rotation of the disc alters the area of the flow path and thereby controls the flow. Therefore, unlike globe valves, if an elbow or tee is placed upstream from the valve, the valve is directly affected by the disturbed flow and cavitation, noise, vibration, or other problems result. In the worst case, this may cause an imbalance of torque on the valve and result in rendering the actuator ineffective. To avoid these problems, install a straight pipe of a sufficient length (at least 6 to 8D) in the valve up-and down-stream side, and carefully consider the orientation of the valve to minimize the affect of drift. In addition, when installing stop valves in front of and behind the valve, leave a space of at least 6D in between.
- The concave side of the disc (the side with the stem exposed) must face upstream.
- Do not use plastic pipes and loose flanges.
- When installing or removing the valve, keep the disc fully closed.
- It is possible that seat leakage occur when fluid (e.g. powder and/or liquid) is solidified by working temperature and other cause. Consult us.
  Please note that use with vertical line such as bottom area of discharge spout of hopper, and tank.

507V

Installation Instructions

- Use a gasket when installing the valve.
- If using a diaphragm actuator, the actuator must be installed vertically.

Operation Instructions

- If leakage from the gland occurs during operation, immediately retighten the gland nuts. The nuts should be tightened alternately and evenly in a diagonal pattern, to avoid imbalance.

508V

Installation Instructions

- Since no gasket is required, do not install one.
- Valves can be installed in any orientation, to allow for the easiest possible operation of the valve. However, be careful of the orientation of the stem. Also, for valve sizes of 350mm or larger, never install the actuator facing downward. (Refer to “a Handling Precautions”.

Operation Instructions

- The pressure rating of the valve body is ANSI Class 300 (50 to 200mm) and ANSI Class 150 (250 to 400mm). However, since the pressure rating for the valve disc and stem is lower, be sure to have the valve in the open position when performing hydraulic pressure testing of the piping.

Rotary Control Valves

DTM

Installation Instructions

- Please use spiral wound gasket if spiral wound gasket is used for JIS10K pipe.
- In case of double flanged body, flange outside diameter and thickness may not be in accordance with the flange spec.
- Please insulate the valve body if used for heat cycle operation from ambient, low temperature to high temperature, and batch cycle operation by main valve of steam header.
- When installing a non-return valve, pump and DTM, always insert a short pipe in between. Not doing so will cause the disc to hit during operation and lead to faulty operation.

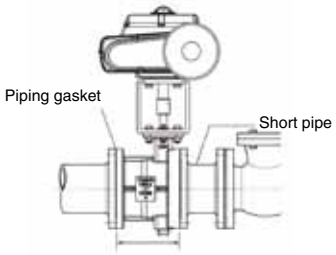

※Installation Direction in artwork is "B"direction.

- When the drive member is diaphragm, always keep the stem horizontal and the diaphragm facing up.
- Use air purging to clean the flange faces that will contact the valve. If there is rust or some other foreign material sticking to a flange face, clean it with a suitable cleaning fluid (alcohol or neutral detergent, etc.)

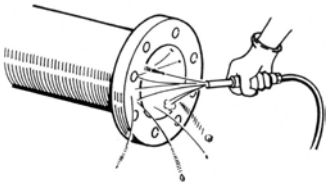

If possible, install in the piping a short pipe with a face-to-face dimension identical to the butterfly valve and blow into the pipe to completely remove foreign substances.

- When performing a pressure test, completely open the valve (if using a pressure higher than the rated pressure). Never use a fully closed valve in place of a blind flange. If inserting a blind flange or similar device, take care not to forcibly insert the flange as the flange face may be damaged on the DTM, causing leakage.

Chemically Resistant Butterfly Valves

Storage Conditions

- Since PFA・PTFE is easily damaged, do not unpack the valves until you are ready to install it in the piping.

Installation Instructions

- Except for Models 846T and 847T, a butterfly valve should be installed on a pipeline with gaskets in between piping flanges. For the gasket sizes, adhere to the recommended gasket sizes listed in this catalog and always use a gasket sealer to assure reliable sealing.
- Never use a soft gasket such as rubber gaskets. Doing so may cause malfunctions.
- When installing or removing the valve, keep the valve disc opened to an approximate10 angle.
- It is possible that seat leakage occur when fluid (e.g. powder and/or liquid) is solidified by working temperature and other cause. Consult us.
  Please note that use with vertical line such as bottom area of discharge spout of hopper, and tank.

846T/847T

Installation Instructions

- As a rule, these valves do not require a gasket for the pipe flanges. However, if a flange surface is not flat due to scratches, dents, or other such reasons, install a commercially-available gasket.
  However, do not use rubber or other soft gaskets. Doing so may cause malfunctions.

841T/842T

Installation Instructions

- Insert a gasket between the valve and flange. For the gasket size, adhere to the recommended gasket sizes listed in this catalog.
- Do not use rubber or other soft gaskets. Doing so may cause malfunctions.
- After centering the pipes, insert bolts at the proper locations so that the bottom of the valve can rest upon them to prevent the valve from falling through.

Handling Precautions

Rubber Seated Valves

Installation Instructions

- Align the pipes and insert the valve between them.
- Since no gasket is required, do not install one. Installing one may cause malfunctions.
- When installing or removing the valve, keep the valve disc opened to an approximate10 angle.
- Do not install a butterfly valve with a rubber seat directly to a rubber flexible joint. The direct connection will result in the improper functioning of the valve. In this case, place a spacer or a mating flange on both sides of the valve between the valve and the rubber flexible joints.

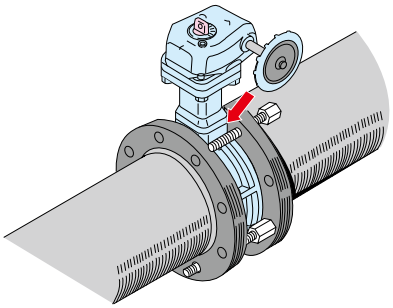

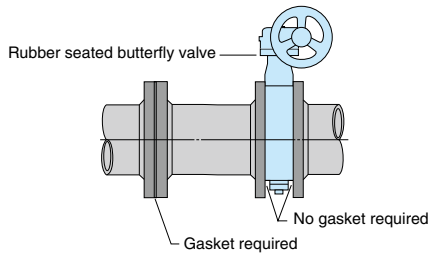

700Z

Installation Instructions

- Insert bolts to support the upper rib of the valve when 3/4 of the valve is inserted between the flanges.

700G/704G/705G/71LG

Installation Instructions

- Insert bolts to support the upper rib of the valve when 3/4 of the valve is inserted between the flanges.
- To center the piping for JIS 10K flanges, insert centering sleeves on the bolts and install the bolts to support the valve at the bottom and prevent it from falling through (only for 100, 125, and 150mm sizes).

*Use the provided centering sleeves to facilitate the operation.

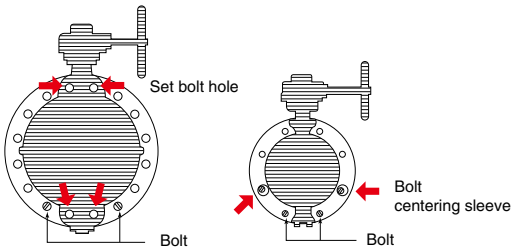

731P/732P

700E/700K/700S

704G/722F/720F

KRV

227P

Storage Conditions

- When stored for a long period of time, the FCD disc (ductile cast iron) and other plated parts (opening/closing board, bolts, nuts, worm shaft, etc.) should be coated with the specified "Ferro Guard" rust preventative once a year.

Installation Instructions

- Avoid solvents from touching the seat ring. Attention must be paid to prevent all materials other than NBR and Viton from being exposed to machine oil.

Anti-Vibration Check Valve

MKT®

Installation Instructions

- Installation of the MKT immediately after welding the pipe flange will lead to adverse consequences, such as damage to the seatring. Make sure that the temperature has cooled sufficiently and that you have removed weld spatter before installing the MKT. Never weld when the MKT is in the piping. (Fig. A)

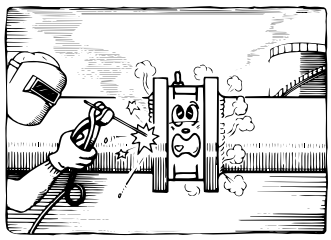

Fig.A

- The flange may leak if the flange face that contacts the MKT is as shown in Fig. B. Also, please confirm that there is no deformation to the flange or that there is no damage, such as scratches, on the flange surface.

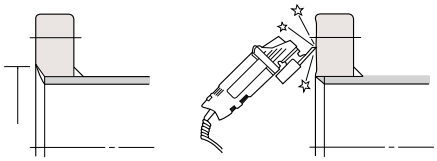

Fig.B

- **Excessive weld**
  The resulting oversized inner pipe diameter may cause a flange leak.
- **Rough surface from grinding**
  May cause a flange leak.

- Always be sure to use a piping gasket. The piping gasket will enter the piping inside and cause malfunction if a rubber or similar soft gasket is used. Therefore, make sure that the piping gasket does not enter the radius of MKT plate operation. (Fig. C)

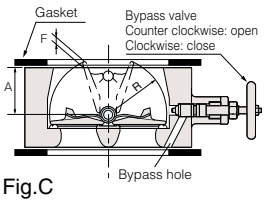

Fig.C

(Table 1) Plate operation radii

Nominal size mm	Nominal size inch	R	A	F※1
50	2	29.0	30.0	0.0
65	2 1/2	36.3	36.0	0.0
80	3	43.2	40.5	0.0
100	4	53.3	38.0	8.4
125	5	66.0	47.5	11.0
150	6	78.9	53.5	17.5
200	8	104.2	72.0	25.7
250	10	129.8	83.5	37.7
300	12	154.5	110.0	35.0

※1. "0" when disk does not fly out.

- Align the MKT to the flanges accurately. Malfunction can occur if the pipe edge or piping gasket enters the radius of MKT plate operation.

- Do not apply strong shock such as by throwing the MKT.

- When installing butterfly valve and MKT, always insert a short pipe in between. Not doing so will cause the disc to hit during operation and lead to faulty operation. (Fig. D)

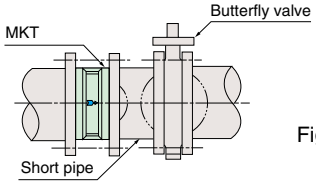

Fig.D

- Direct installation on the pump is possible, but please be sure to follow the cautions below.
  1 If the flow rate distribution is uneven immediately after the spiral pump, etc., make the flow rate distribution that is received by both plates of the check valve equal by installing so that the changing direction in the flow rate distribution is parallel to the hinge pin direction, as shown in (Fig. E)
  2 An average pump exit flow rate as a using conditwn must be no more than 10 m/sec (fresh water).
  3 If fluids exceed a flow rate of 5 m/s, cavitation may occur from the check valve. Therefore, separate the valve or other device on the downstream side by at least 2D when installing.
  4 Be careful of pressure loss in the check valve. (Refer to the Head loss vs. Flow table.)

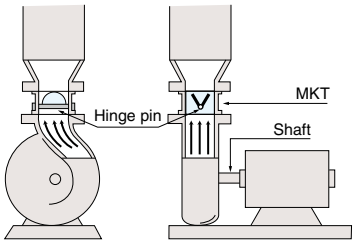

Fig.E

- Please consult us when the velocity flow by liquid exceeds 10 m/sec.

- Seat leakage may occur if the difference pressure is less than 0.04 MPa.

- Make sure no solvent gets onto the seat ring. If EPDM rubber is used, always keep the seat ring away from any machine oil. (The rubber material shows on the name plate).

- When installing the check valve, the installation direction should be in accordance with the following.
  1 For a horizontal installation make sure the check valve hinge pin is vertical. (Fig. F)

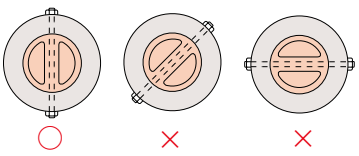

○ × × Fig.F

  2 For elbow or pump exit installations, make surely the influence of the flow rate on the plate to be well balanced. (Fig. G)
  3 For installations on the downstream side of butterfly valves, make surely the valve shaft of the butterfly valve and the hinge pin of the check valve crosses alternately.

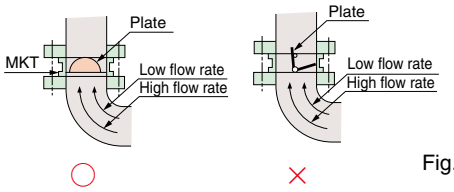

○ × Fig.G

Although vibration caused by the pump and fluid will not affect MKT series valves, please install flexible piping or similar one in order to prevent any downstream piping and devices from vibretion affecting.

Handling Precautions

Wafer Check Valves

903C

Installation Instructions

- Install the valve so that the cast marking on the body of the Bata-Check corresponds with the flow direction. (Fig. 1)
- Vertical installation is also possible.

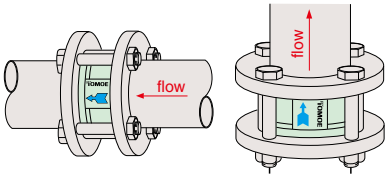

Fig.1

- For horizontal installation, have the rib of the Bata-Check aligned vertically. (Fig. 2)

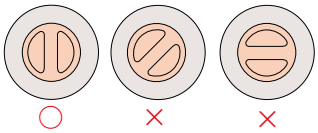

Fig.2

- Always place an extension pipe between a Bata-Check valve and butterfly valve. Never connect the two valves directly together. (Fig. 3)

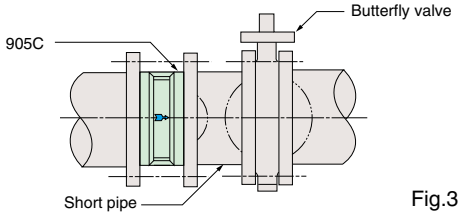

Fig.3

- Make sure that the end of a pipe or gasket does not come within the operating radius of the plate of the Bata-Check valve. (Fig. 4)

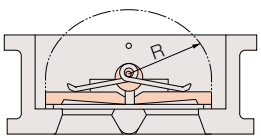

Fig.4

- When mounting a reducer in front of a Bata-Check valve, have a space of 5 times the valve diameter (5D) or more, or at least 2 to 3D between the valve and reducer. (Fig. 5)

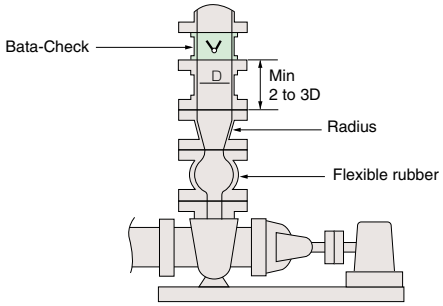

Fig.5

- When installing a Bata-Check valve near an elbow, have as large a space as possible between the elbow and the Bata-Check valve. Also, make sure that both plates are stressed evenly by the flow. (Fig. 6)

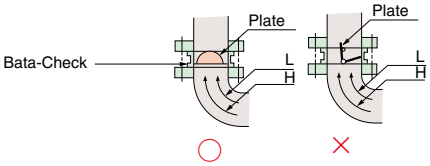

Fig.6

- When installing a Bata-Check valve at the outlet from a pump, leave a space of at least 6 times the valve diameter (6D) between the valve and pump. Also, make sure that both plates are stressed evenly by the flow. (Fig. 7)

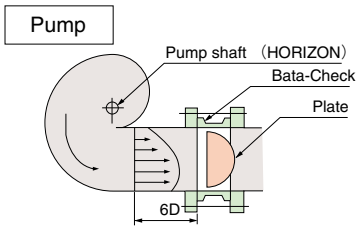

Fig.7

- Consult us when the liquid velocity flow exceeds 3m/sec.
- Seat leakage may occur if the pressure difference is less than 0.02Mpa.

Motorized Actuators

Handling Precautions

- The built-in spare limit switch for the fully opened and closed positions of the motorized actuator (non-voltage output switches for the fully opened and closed positions) is adjusted at the factory to output approximately 2% ahead of the position for actual sealing at the rated pressure. This is done to activate the limit switches with different cams. Since the positioning switch and opening angle detection switch must not activate simultaneously, the spare limit switch is set to always activate first. Therefore, if this output is used to stop the motor or signals, the valve will stop at that position and the sealing ability will be compromised. If your control requirements or other factors require that valve positioning be determined by the spare limit switches, be sure to inform us at the time of ordering. We will then adjust the output position for the spare limit switch to correspond to the fully closed position.

- Each electric motor actuator should be operated by an independent circuit breaker or relay. If more than two electric motor actuators are operated by one circuit, erroneous operation may result due to a loop circuit.

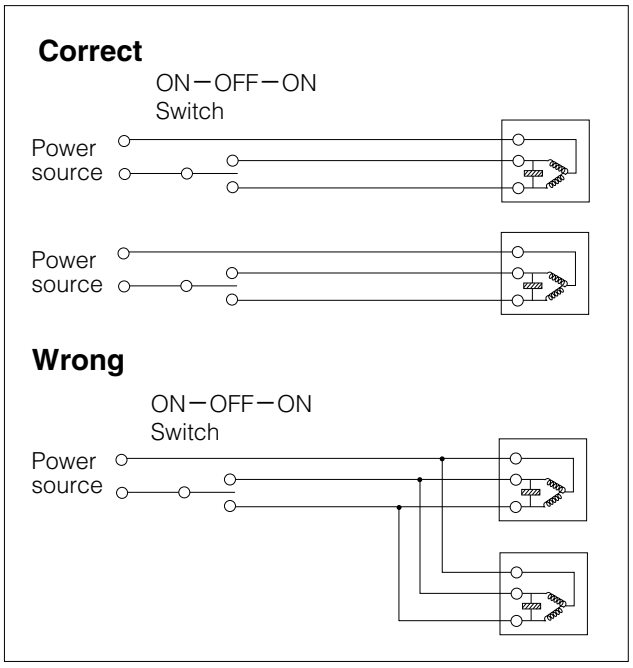

- Prepare a protection cover for the electric motor actuator to protect it from any corrosive fluid, such as cooling water with hypochorous acid that spreads out from a cooling tower directly. If no protection is provided, the sealing parts and actuator housing may become damaged.
- Prevent hunting of electric motor actuator with proper PID adjustment when employing it for proportional control purposes. Otherwise, the life of the valve and actuator will shorten due to wearing of the friction and connection parts.

New ELMY®

Handling Precautions

- Perform the wiring in accordance with the diagram on the inside of the casing cover. After completing the wiring, verify the wiring connections carefully to make sure there are no mistakes.
- To prevent rainwater and the like from entering the unit at the two wiring outlets (G1/2), take the appropriate measures to assure a watertight seal.
- Every cover of the actuator is sealed with an O-ring sealing gasket. Take care not to damage the gaskets during disassembly or assembly of the actuator.
- Except for the top cover, all the screws for the covers have a sealing agent applied to them to prevent the screws from working loose. When removing a screw, take care not to strip the head of the screw with the screwdriver. Also, when installing a screw, apply a sealing agent to the screw and then install it.
- When adjusting the open/close limit switch, be sure to release the lock nut on the stopper bolt and then loosen the stopper bolt by 4 to 5 turns.
- Make a 0.5 second interval when reversing the electric motor actuator from intermediate position utilizing a potentiometer. Surge current generated from a motor may create some damage to the switching relay when reversing it. Modifications to the reduction gear or upgrading of the actuator may be required. Consult us.
- Each electric motor actuator should be operated by an independent circuit breaker or relay. Erroneous operation may be caused by a loop circuit if more than two motor actuators are operated by one circuit breaker or relay.
- Manual operation unit should be used after the power supply is cut. It may suddenly turn if the power is supplied.

Handling Precautions

Actuators

New MICOM ELMY III

The "WARNING" mark indicates the possibility of death or serious injury.

- Before wiring the actuator, make sure that the power supply matches that listed on the specifications plate on the actuator. If the wrong voltage is supplied, it may cause the actuator to burn out.
- Be sure to connect the earth terminal to avoid electrical shocks.
- To prevent rainwater and the like from entering the unit at the two wiring outlets (G1/2), take the appropriate measures to assure a watertight seal. If moisture enters the unit, it may damage the actuator or cause it to burn out.
- If you need to touch a dip switch or reset a switch for adjustment or inspection, do not touch any other components or terminals on the circuit board. Careless touching of components or terminals may cause electrical shocks.

The "CAUTION" mark indicates the possibility of serious injury or damage to equipment.

- All necessary settings are completed prior to shipment from our factory. If any modifications or adjustments are required, follow the directions given in the instruction manual. Incorrect procedures may cause improper operation or damage to the components.
- When wiring the actuator, be sure to follow the circuit diagram. Be sure to then verify that there are no mistakes before supplying power to the actuator.
- The input and output signal wires in the unit built into the actuator are not insulated. If insulation is required, install a converter on the outside of the unit. Not doing so may cause improper operation.
- When setting the dip switches, do not apply excessive force as this could damage the switches.
- The input signal has preference over the contact input of a 4 to 20mA signal. If the 4 to 20mA signal is used for control, then be sure to eliminate the contact signal. Failure to do so may cause improper operation.
- When two actuators are controlled by one input signal, make sure that the signal is within the allowable load resistance of the output side. Failure to do so may cause improper operation.
- Do not apply loads over the capacity of output contacts for the opening angle, alarms, or stop signals.
- There are times when the surface of the actuator becomes hot during operation. This is caused by the heat from the internal motor and not due to a malfunction. However, if valve operation is more frequent than the allowable amount, the temperature alarm may sound and cause a compulsory stop.
- Every cover of the actuator is sealed with an O-ring sealing gasket. Take care not to damage the gaskets during wiring or inspecting of the actuator. The sealing properties will decrease, which may lead to malfunction.
- Except for the top cover, all the screws for the covers have a sealing agent applied to them to prevent the screws from working loose. When removing a screw, take care not to strip the head of the screw with the screwdriver.

Pneumatic Actuators

The "WARNING" mark indicates the possibility of death or serious injury.

This unit should be handled by well-versed and experienced technicians only.

- Compressed air is hazardous if wrongly handled. A machine or a unit utilizing compressed air should be handled by a well-trained professional technicians only.

Handling or dismantling of the unit should not be carried out before confirming the safety precautions.

- Inspection and maintenance should commence only after acknowledgment of safety precautions such as preventions against falling of parts or material or other accidental happenings.
- The unit should only be dismantled after confirmation of the above safety precautions and after removal of the air supply and power sources.
- Before restarting of the unit, ensure that the action of the movements are in a safe and normal position.

Handling Precautions

- During installation, make sure that no dust or any foreign matter enters through the air port.
- When attaching joints to taper screws on the air port, make sure that you screw them in properly and straightly. Do not overtighten as you may damage the threads. Also, be careful during the initial threading to ensure the proper catching of the threads.
- Use a speed controller to control rotating speed. Use a pressure reducing valve for speed adjustment.
- In the airline, install an air filter to remove any moisture or dust from the air. Moisture or dust will deteriorate the valve and shorten its operating life.
- Avoid use in ambient temperatures over 80C. Use in such high temperatures may cause malfunctions.
- Do not subject the cylinder or peripheral components to excessive forces such shocks or impacts with other objects.
- This cylinder is a non-lubricated type, however, you may provide lubrication for the protection of peripheral equipment. (Use JISK-2213 turbine additive oil No.1, No.2, or similar oil. Never use spindle oil or machine oil, as they deteriorate the O-rings and other rubber components.)
- Periodically check and retighten the bolts.
- Check and clean the actuator once a year even if it is not or has not been in use.
- If an external or internal air leak occurs during operation, inspect the actuator and check the condition of the O-rings and look for abrasion of the moving parts. If any component is damaged, replace it with a new one right away.

New T-DYNAMO

Handling Precautions

- The hexagonal bolts that retain the cover must not be slackened.
- On single acting types, removal of the cover will cause the spring to eject out, due to it s tensile strength impact and may cause injury or damage. In case of abnormal operation of the unit, customers are requested to contact our sales department.
- In the case of single acting actuators being installed outdoors, a rain-prevention precaution is required: the elbows on the air inlet/outlet ports should be oriented downwards, for example.
- When the case and the beas plate are separeted, appling screw slack inhibitor to bolt before re-assembly.

Guideline for Inspection of Our Products

Warranty period for our products is described in this catalog in "Warranty Period" under "Before Placing Your Order". For inspection of our products, please refer to the following as a guideline (only if the product is used with clean water at room temperature and at a pressure less than the rated pressure of the valve).
Initial performance retention life (inspection interval) is shown below. Please perform inspection and maintenance at every inspection interval.

■Concentric rubber seated butterfly valves (valve bodies)

Rubber seated valves are based on JISB2032 (wafer type rubber seated butterfly valves).
"After maximum operating hydraulic pressure is applied using clean water with the valve fully closed at room temperature and then repeating full opening/closing operation of the valve 10,000 times, no leakage shall be observed from the seat at 1.1 times the maximum operating pressure." (Excerpt from JISB2032-2009)
The life of the valve may be shortened if the ambient temperature is 50ºC or higher, if the fluid is corrosive, viscous and adherent, or if the fluid contains foreign or solid substances. [Table 1] [Table 2]

[Table 1]

Inspection interval if valve seat ring cannot be replaced	NAV series (Note 1)	High pressure valves with coated seat	Check valves
	700Z, 763Z, 775Z, 775J, 776J, 778Z, 778J, 779Z, 779J, 783Z, 785Z, 788J	731P, 732P, 733P, 731Q, 738Q	901C, 903C, 905C, 906C, 907H, 908H
Initial performance retention life (inspection interval) (Note 2)	Inspection interval is one year or 10,000 cycles of opening/closing, whichever comes first. Check for external leakage, loose bolts, valve seat leakage and abnormal operation. If any abnormality is found, detach the valve from the piping and check for corrosion of the valve body and wear of the seat ring. If any abnormality is found in these parts, replace the valve.		

[Table 2]

Rubber seated valves other than those above
Inspection interval is one year or 10,000 cycles of opening/closing, whichever comes first. Check for external leakage, loose bolts, valve seat leakage and abnormal operation. If any abnormality is found, detach the valve from the piping and check for corrosion of the valve body and wear of the seat ring. If any abnormality is found in these parts, replace consumables such as seat ring and packing. Performing the above maintenance can extend the valve's life to more than 10,000 cycles.

■Double eccentric valves (soft seated valves)

The level of performance and functionality at the time of shipment can be maintained until 3,000 cycles of opening/closing. However, this designed lifetime could become shortened depending on temperature conditions and type of fluid (corrosiveness, viscosity, solid matter and deposit).
Inspection interval is one year or 3,000 cycles of opening/closing, whichever comes first. Check for external leakage, loose bolts, valve seat leakage and abnormal operation. If any abnormality is found, detach the valve from the piping and check for corrosion of the valve body and wear of the seat ring. If necessary, replace consumables such as seat ring and packing.
Retighten gland packing, flange bolts and bottom lid bolts if needed.

■Double/triple eccentric butterfly valves (metal seated valves)

Regulations on seat leakage described in the valve specification are inspection standards at the time of shipment.
Leakage rate may increase depending on ambient temperature, pressure condition and type of fluid. Perform maintenance on sealing parts: their life is 3,000 cycles of opening/closing at most. (Replace them if needed.)
Inspection interval is one year or 3,000 cycles of opening/closing, whichever comes first. Check for external leakage, loose bolts, valve seat leakage and abnormal operation. If any abnormality is found, detach the valve from the piping and check for corrosion of the valve body and wear of the seat ring. If necessary, replace consumables such as seat ring and packing.
Retighten gland packing, flange bolts and bottom lid bolts if needed.

■Actuators (gears, levers) 1L, 1T, 1G, 1J, 2U, 2K, 2S, 2E

These parts are basically maintenance-free, but if the valve is frequently opened and closed (more than 10,000 cycles per year) or used in a bad environment (saline or moist environment), check for corrosion and loose bolts every 10,000 cycles or one year by visual inspection. If any abnormality is found, follow the instruction described in "All actuators" below.

■Actuators (cylinders) 7E, 7G, 7F, 3A, 3K, 3U

Inspection interval is 50,000 cycles of opening/closing or one year.
If any abnormality is found, follow the instruction described in "All actuators" below.

■Actuators (motorized actuators) 4I

For other motorized actuators, please contact us.
Inspection interval is 30,000 cycles of opening/closing or one year.
If any abnormality is found, follow the instruction described in "All actuators" below.

■All actuators

If any abnormality is found, open the lid of the actuator's reducer and check for ingress of water, discoloration of grease and damage to gears. If needed, perform maintenance such as greasing. If water ingress or gear damage is found, replace the actuator. For further information, refer to the instruction manual of each model. [Table 3]

[Table 3]

Type of products	Inspection interval and initial performance retention life (cycles of opening/closing or usable years)	Type of maintenance
NAV series(Note 1)	10,000 cycles or 1 year	Appearance check Replacement of valve
Valves whose seats cannot be replaced (Note 2)	10,000 cycles or 1 year	Appearance check Replacement of valve
Concentric rubber seated butterfly valves (other than the above types)	10,000 cycles or 1 year	Appearance check Replacement of consumables
Double eccentric valves (soft seated)	3,000 cycles or 1 year	Appearance check Replacement of consumables
Double/triple eccentric valves (metal seated)	3,000 cycles or 1 year	Appearance check Replacement of consumables
Manual actuators (gears, levers)	10,000 cycles or 1 year	Appearance check Greasing, etc.
Automatic actuators (cylinders)	50,000 cycles or 1 year	Appearance check Replacement of consumables Greasing, etc
Automatic actuators (motorized)	30,000 cycles or 1 year Predetermined inspection needed	Regular inspection Check for abnormality Greasing, etc.

Life of valves is based on the extent of their use with clean water at room temperature and below rated pressure.
Usage condition of actuators, such as the ambient environment, should be within the range described in each specification and should not be in corrosive atmosphere (Note 3) (including installation near the shore).
If you need to use the product outside the above range, please check with us before placing your order.

Note 1) NAV series: 763Z, 773Z, 775Z, 775J, 776Z, 778Z, 778J, 779Z, 779J, 783Z, 785J, 788J
Note 2) Models whose rubber seats cannot be replaced are the following:
NAV series: 763Z, 773Z, 775Z, 775J, 776Z, 778Z, 778J, 779Z, 779J, 783Z, 785J, 788J
731P series: 731P, 732P, 733P, 731Q, 738Q
Check valves: 901C, 903C, 905C, 906C, 907H, 908H
Note 3) Corrosive atmosphere means an external environment that includes gases that corrode metal, rubber and resin (e.g. chlorine, saline air, etc.) or an environment in which the products are constantly exposed to water.
Note) For further information on inspection and disassembly, please refer to the instruction manual.
Note) The cycle described above means a repetition of opening/closing of a valve including full closing. The cycle does not include repetition of slight controlling movements with the valve half open. In such a case, each usage needs to be considered.

Information on discontinued models

**Information on discontinued models is provided below.
For further information on standard specifications,
please refer to the catalog before use.**

Information on discontinued models

Discontinued model	Nominal size	Date of sale discontinuation	Date of discontinuation of parts supply	Recommended alternative model
		＜High Performance Butterfly Valve＞		
336Y	350～600mm	2000.05.01	2005.04.30	**302A**
331Y	80～300mm	2000.05.01	2005.04.30	**304A**
		＜Chemically Resistant Butterfly Valves＞		
841T	250･300mm	2012.10.31	2017.10.31	**846T**
842T	250･300mm	2004.05.01	2009.04.30	**847T**
841T	50～200mm	2001.06.01	2006.05.31	**50mm:847T** **65～200mm:846T**
842T	50～200mm	1999.12.01	2004.11.30	**847T**
		＜Rubber Seated Valves＞		
773Z	40～300mm	2014.04.01	2019.03.31	**700Z**
731X • 732X	350～600mm	2013.09.03	—	**731P • 732P** Model names integrated, but no change in product specification
SF490A Dacrotized Disc (700G･705G･704G)	65mm	2008.11	2009.10	**SCS14** (Ribbed) valve disc
702Z	40～300mm	2004.05.01	2009.04.30	**773Z**
700S	50～600mm (550mm available)	2004.05.01	2009.04.30	**700G** **705G**
732X	50～300mm	2000.10.01	2005.09.30	**731P•732P**
731X	50～300mm	1999.01.05	2003.12.31	**731P•732P**
641B	50～200mm	1999.06.01	2004.05.31	—
720F	50～800mm	1999.06.01	2004.06.01	**50～100mm:704G** **125～800mm:722F**
731X	350～400mm	1999.01.05	2003.12.31	**732X**
700E	50～600mm	1998.04.01	2003.03.31	**700G•700S**(550mm only)
		＜Check Valves＞		
904C		2010.07.31	2010.07.31	**908H**

Discontinued model	Date of sale discontinuation	Date of discontinuation of parts supply	Recommended alternative model
	＜Motorized Actuator＞		
PMK080SRM	2009.06.30	2010.06.30	**PMK-100CR**
SRE	2005.12.31	2010.12.30	**SRJ**
PMK030SRM	2003.07.31	2006.07.31	**PMK-030CR**
MICOM ELMY	1997.03.01	2002.02.28	**New MICOM ELMY**
	＜Pneumatic Actuator＞		
T-matic	2006.10.31	2011.10.30	**T-DYNAMO**
Z cylinder	2000.07.01	2005.06.30	**T-DYNAMO**
	＜Manual Actuator＞		
1G lever	2004.06.01	2009.05.31	**1T lever**
2M gear	2000.09.01	2000.09.01	**2U gear**
1M lever	1997.10.01	2002.09.30	**1T lever**

Our Coating Standard

We provide a coating (surface treatment) that meets the general environment standard in the following table. For use in areas susceptible to damage by salt, such as places close to the sea, please ask for the special coating shown in the following table.

Coating Selection Table (A) by Valve Installation Environment

Valve : 700G, 700GB Bore 300mm or less
846T, 847T Bore 250mm
Actuator : 1T, 2U

Item \ Specification		General environment	Special specification	
		Indoor/outdoor specification	Salt damage resistant specification	Heavy salt damage resistant specification
Usage environment		General indoors/outdoors	Outdoors at distance of least 300 m but no more than 1 km from the shore	Outdoors in coastal regions within 300m from the shore
Applied material		※1 JIS type 2 scraping	Same as on the left	※2 JIS type 1 scraping
Applied coating	Undercoat	Polyester epoxy powder coating	Same as on the left	Zinc rich primer
	Overcoat			Epoxy resin coating
				Polyurethane resin coating

Coating Selection Table (B) by Valve Installation Environment

Valve : 700S, 7004G (FCD body), 705G, 731P, 732P Bore 300mm or less
846T, 847T Bore 200mm
508V Bore 350mm or less
Actuator : TGA・TG-S cylinder 6Z diaphragm

Item \ Specification		General environment	Special specification	
		Indoor/outdoor specification	Salt damage resistant specification	Heavy salt damage resistant specification
Usage environment		General indoors/outdoors	Outdoors at distance of least 300 m but no more than 1 km from the shore	Outdoors in coastal regions within 300m from the shore
Surface preparation		※1 JIS type 2 scraping	Same as on the left	※2 JIS type 1 scraping
Applied coating	Undercoat	Epoxy resin coating (solvent)	Epoxy resin coating (solvent)	Zinc rich primer
	Overcoat		Polyurethane resin coating	Epoxy resin coating
				Polyurethane resin coating

● For use in a severe installation environment such as around a cooling tower, overcoat (epoxy) is recommended.

※1: Equivalent to ISO St3
※2: Equivalent to ISO St2.5

BUTTERFLY VALVES SELECTION GUIDE

Butterfly Valves Selection Guide

Triple Offset Butterfly Valves	TRITEC	17
	TT2	25
High Performance Butterfly Valves	334A	59
	302A/303Q	79
	304A/304Q	107
	302Y/304Y	129
	304M(HLV)	149
Rotary Control Valves	507V/508V	153
	DTM	187
Chemically Resistant Butterfly Valves	846T/847T/847Q	189
	841T/842T	211
Rubber Seated Valves	700Z	227
	700G/704G/705G	239
	700GB	287
	731P/732P/732Q/752W	297
	71LG	329
	700E/700K/700S	335
	704G/722F/720F	347
	KRV	375
	227P	377
Bata-Check	MKT	381
	903C	389

TRITEC

150 / 300 / 600 / 900 / 1500 / 2500lb Range

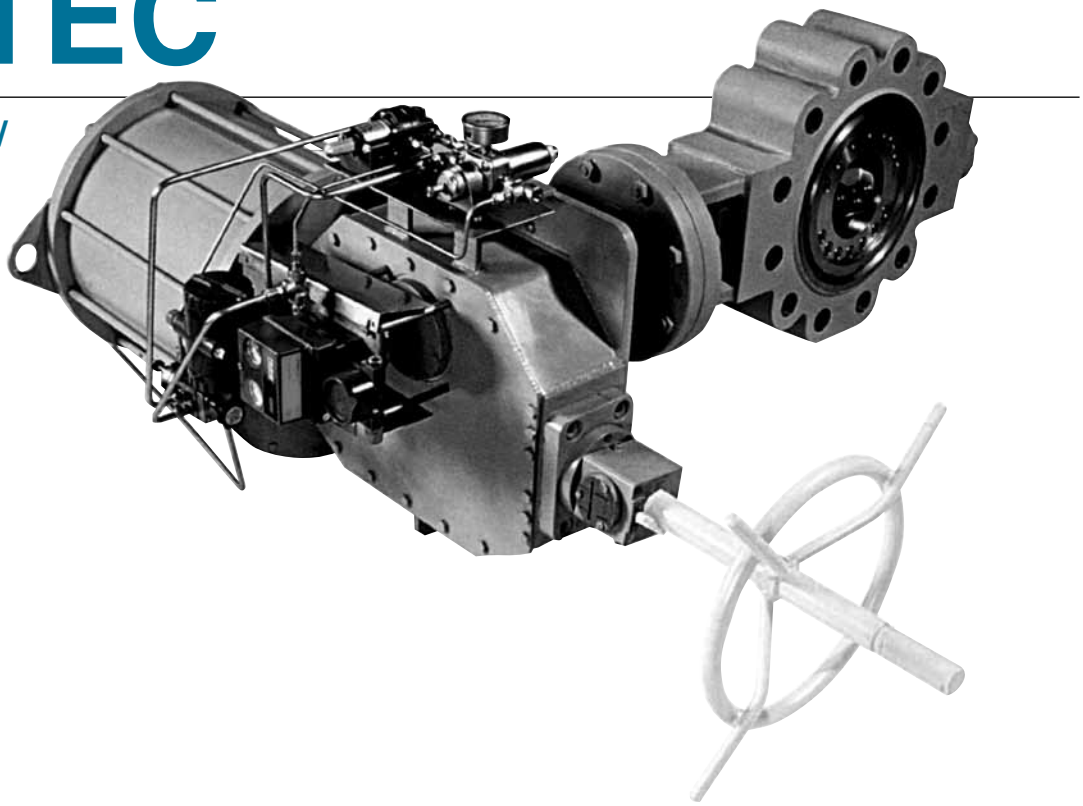

Features and Benefits

- Triple offset and ellipsoidal sealing Geometry
- Bi-directional bubble tight shut-off
- Inherently Firesafe
- Developed Geometry results in
  - Zero Seat/Seal Friction
  - Low Torques
  - Extended Service Life
  - Continued Seal through Thermal Cycling
  - Torque Seating
- Excellent flow and throttling characteristics covering services from Cryogenic to high temperature
- Excellent control of Fugitive Emission by virtue of Rotary stem movement and advanced packing materials
  - Less than 50ppm on Fugitive
  - Emission Test to cover EPA21
  - Other tests available on request
- Firesafe meet API Std 607 4th / 5th Edition and BS 6755 part 2 / API 6FA
- Available Fully Rated to Class 2500Lb
- Fully rated for end of line duty
- Standard materials conform to NACE,all exotic materials also available
- Laminated seat is mounted in the body, removing it from the erosive effects of the flowing media
- Seat is self centering “floating” design
- Both Seat and Seal are field replaceable without special tools
- Unique elliptical bolting pattern allows foolproof replacement of seat and seal
- Gasket Sealing Face is completely uninterrupted by fixings
- Suitable for use with Spiral Wound gaskets and all flange finishes including RTJ
- Antiblowout device on shaft with both internal and external retaining systems according to API Std 609
- ISO mounting flange allows easy fitting and changing of operators
- Operator is bolted and doweled to prevent radial movement and subsequent loss of seating torque
- Body counterbore and seat bolting arranged elliptically to ensure equal support, gasket land and gasket loading all around the elliptical edge of the laminated body seat
- Inboard and outboard thrust mechanisms prevent decentralising of disc, even under high temperature and line pressure
- By eliminating seat-seal friction on unseating, Tritec removes the “Blind Zone” and increases the rangeability or controllable range to the full 90˚ of movement. The rotation geometry and inboard bearing design reduce the effect of dynamic torque and mechanical noise-vibration, increasing midrange control accuracy. Cavitation and Noise reducers are available to complement the Tritec valve under high pressure drop process situations

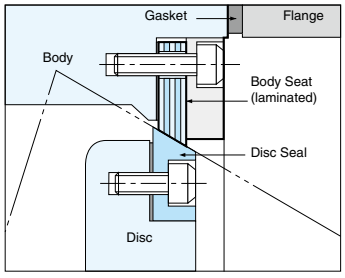

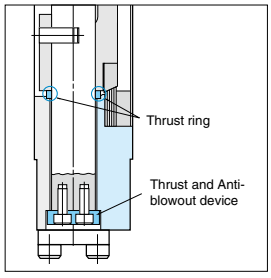

Offset Valve-Disc / Seat Friction

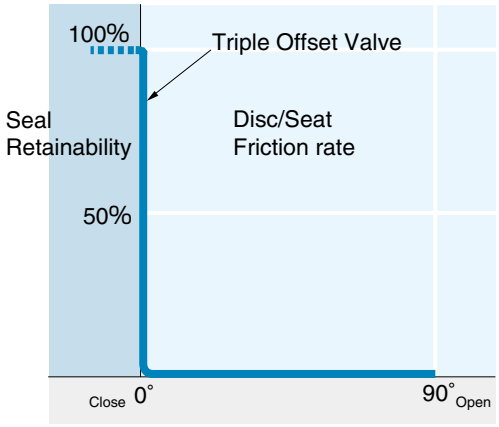

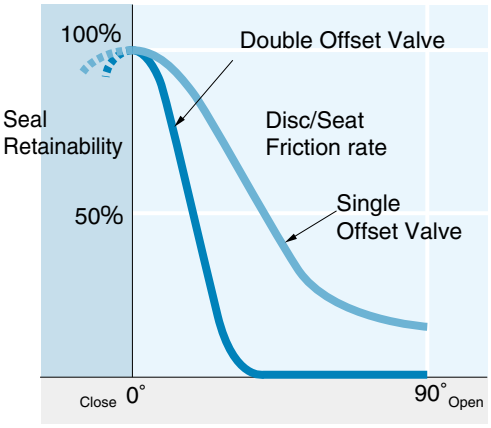

Tracing the evolution of Triple Offset design

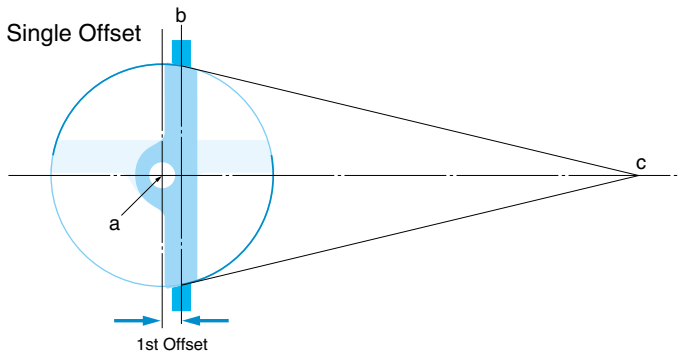

The centre of rotation is moved back from the centreline of the valve disc. The seat and seal are designed conically and on centre. This design relies on a frictional interference seal and so is applicable only to soft seated valves.

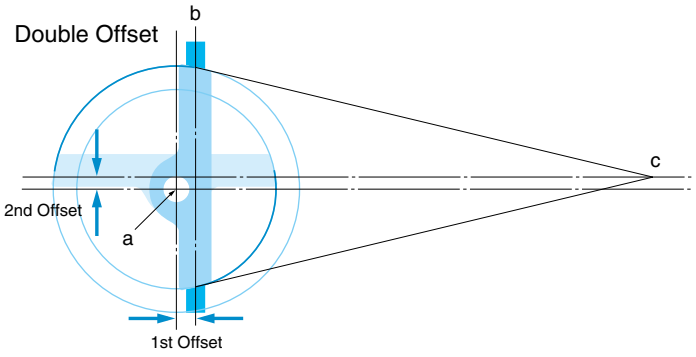

The centre of rotation is moved from the centerline of the valve body. The seat and seal design remains conical and on centre. This design again relies on a frictional interference seal, but the length of rotation over which this friction occurs is reduced, allowing a larger range of process resistant seat materials to be used. However, these materials must be relatively soft or highly elastic to prevent “jamming”.

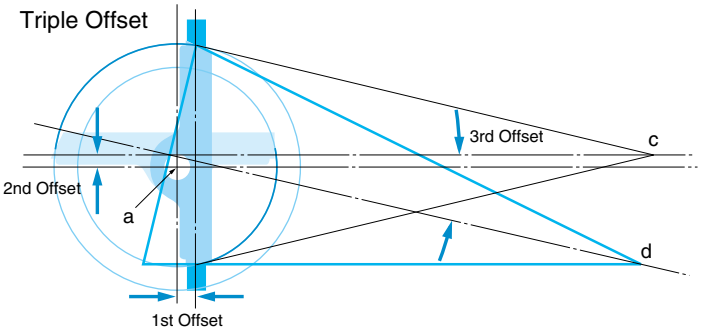

The centreline of the cone is rotated away from the valve centreline resulting in an ellipsoidal profile and providing the third offset. With this geometry, seat seal interference is completely eliminated ensuring long sealing life. The result is a torque seated, process-pressure-aided FRICTIONLESS seal. The geometry allows the body seat to be used as the closed limit stop, aiding operator adjustment. The Triple Offset design is ideally suited to metal seated valves providing bubble-tight performance in high temperature, high pressure and firesafe applications.

Standard Specifications

Design		API Std 609, BS 5155, ANSI B16.34, ASME SEC Ⅷ
Valve Sizes ※1		2"(50mm) — 66"(1650mm)
Pressure Classes		Class 150, 300, 600, 900, 1500, 2500
Body Styles		Lugged, Wafer Flangeless, Double Flanged, Butt Weld End
Flange Accommodation ※2		ANSI B16.5:DN50 — DN600 ANSI B16.47 Series A&B : DN700 — DN1650
Face to Face ※3 Dimensions		LUG and WAFER Type API Std 609 Table 2 : DN 80 — DN600 API Std 609 Table 1 : DN750, 900, 1050, 1200 ISO 5752 Wafer Short : DN700, 800, 1000 DOUBLE FLANGED Type ISO 5752／BS 5155 Double Flange Short
Pressure–Temperature Ratings		ASME/ANSI B16.34 : for Steel ASME/ANSI B16.24 : for Bronze Working Temperature Range as Standard −29℃ (−20°F) to +538℃ (1000°F) With selection of suitable materials −46℃(−51°F) to +700℃ (1292°F)
Pressure Tests		Shell Test, Seat Test : API Std 598 Seat Leakage Rate API Std 598, ISO 5208 Rate A, ANSI B16.104 (ANSI / FCI 70-2) Class Ⅵ
Firesafe		Certified Firesafe to API 6FA and API 607
Marking		API Std 609 MSS SP-25
Operators		Manual Gear, Electric, Pneumatic, Hydraulic
Standard materials	Body	A216 WCB, BS EN 10025(Carbon Steel), A351 CF8M
	Disc	A216 WCB, A351 CF8M
	Stem※4	A564 type 630 H1150+1150
	Body seat	316SS / Graphite
	Disc seal※5	316SS

※1. Please contact the sales office for larger sizes.
※2. JIS 10K, 20K, 30K MSS, API, BS, DIN, PN, ISO also available on request.
※3. ISO 5752 Gate Valve Short (Basic series 3) on request.
※4. Use Inconel 718 for over 400 degrees C.
※5. Titanium nitride hardened, Stellite #6 welding is available as an option.

Design Options

DOUBLE BLOCK & BLEED VALVES.

To allow verifiable, maintainable shut-off in critical isolation applications. Fire tested to AP16FA & AP1607.

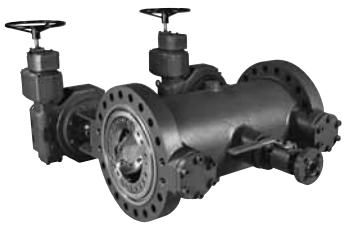

BUTT WELD WITH TOP ENTRY.

Allowing complete maintainability on valves which are welded into line.



Design Options

CONTROL VALVES.

Frictionless seating means increased rangeability, allowing the Tritec valve to perform in both control and isolation application.

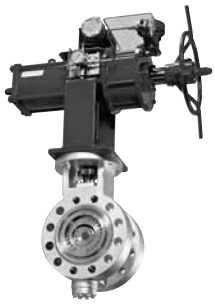

FIRE SAFE DESIGN.

Fire safe approval to API 6FA and API 607.



STEAM JACKETED VALVES.

To maintain process temperature ensuring media remains liquid. Disc and shaft steam tracing as an option.



Full-Jacket type



Semi-Jacket type

VALVES TO REDUCE FUGITIVE EMISSION.

Designed to reduce fugitive emission, testing is available to all international standards plus customer specific requirements.



GATE VALVE FACE TO FACE.

For the direct replacement of gate valves, all dimensions are exactly as per the standard Double Flanged valve with the exception of the face to face dimension which is shown below. (in accordance with ISO 5752 gate valve short).





(Unit: mm)

Valve Size		150Lb Flanged	300Lb Flanged	600Lb Flanged	900Lb Flanged	1500Lb Flanged
mm	inch	Gate F-F	Gate F-F	Gate F-F	Gate F-F	Gate F-F
50	2	178	216	—	—	—
80	3	203	282	356	—	—
100	4	229	305	432	457	—
150	6	267	403	559	610	705
200	8	292	419	660	838	832
250	10	330	457	787	838	991
300	12	356	502	838	965	1130
350	14	381	762	889	1029	1257
400	16	406	838	991	1130	1384
450	18	432	914	1092	1219	1537
500	20	457	991	1194	1321	1664
600	24	508	1143	1397	1549	1943

Allows direct replacement of existing gate valves without modification of pipework.
Disc remains within the body face to face in the fully open position to allow removal of the valve from pipework even when the valve is open.
Reduction of fugitive emission due to quarter turn rather than linear shaft movement.
Reduced operator costs due to quarter turn rather than multi turn / linear.

Referential Drawing

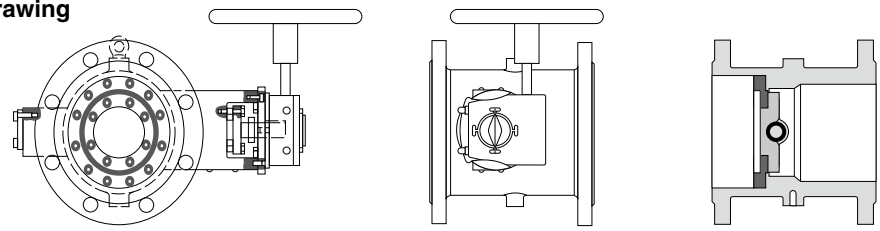

Pressure-Temperature Ratings

Body	A216	Gr. WCB
Disc	A216	Gr. WCB
Shaft	A564	Type 630

Temperature		Working Pressure (MPa)					
(°F)	(℃)	150	300	600	900	1500	2500
−20	−29	1.96	5.11	10.2	15.3	25.5	42.6
100	38	1.96	5.11	10.2	15.3	25.5	42.6
122	50	1.92	5.01	10.0	15.0	25.1	41.8
212	100	1.77	4.66	9.32	14.0	23.3	38.8
302	150	1.58	4.51	9.02	13.5	22.5	37.6
392	200	1.38	4.38	8.76	13.1	21.9	36.5
482	250	1.21	4.19	8.39	12.6	21.0	35.0
572	300	1.02	3.98	7.96	12.0	19.9	33.2
617	325	0.930	3.87	7.74	11.6	19.4	32.3
662	350	0.840	3.76	7.51	11.3	18.8	31.3
707	375	0.740	3.64	7.27	10.9	18.2	30.3
752	400	0.650	3.47	6.94	10.4	17.4	28.9
797	425	0.550	2.88	5.75	8.63	14.4	24.0
842	450	0.460※1	2.30※1	4.60	6.90	11.5	19.2
887	475	0.370※1	1.74※1	3.49	5.23	8.72	14.5
932	500	0.280※1	1.18※1	2.35	3.53	5.88	9.79
1000	538	0.140※1	0.590※1	1.18	1.77	2.95	4.92

Body	A351	Gr. CF8M
Disc	A351	Gr. CF8M
Shaft	A564	Type 630

Temperature		Working Pressure (MPa)					
(°F)	(℃)	150	300	600	900	1500	2500
−20	−29	1.90	4.96	9.93	14.9	24.8	41.4
100	38	1.90	4.96	9.93	14.9	24.8	41.4
122	50	1.84	4.81	9.62	14.4	24.1	40.1
212	100	1.62	4.22	8.44	12.7	21.1	35.2
302	150	1.48	3.85	7.70	11.6	19.3	32.1
392	200	1.37	3.57	7.13	10.7	17.8	29.7
482	250	1.21	3.34	6.68	10.0	16.7	27.8
572	300	1.02	3.16	6.32	9.49	15.8	26.4
617	325	0.930	3.09	6.18	9.27	15.4	25.7
662	350	0.840	3.03	6.07	9.10	15.2	25.3
707	375	0.740	2.99	5.98	8.96	14.9	24.9
752	400	0.650	2.94	5.89	8.83	14.7	24.5
797	425	0.550	2.91	5.83	8.74	14.6	24.3
842	450	0.460	2.88	5.77	8.65	14.4	24.0
887	475	0.370	2.87	5.73	8.60	14.3	23.9
932	500	0.280	2.82	5.65	8.47	14.1	23.5
1000	538	0.140	2.52	5.00	7.52	12.6	20.9

〈Notes〉※1. Permissible, but not recommended for prolonged use above 800°F(427 degree C).
Please contact a sales office for temperatures outside of standard temperature range as detailed in the above table.

Pressure-Temperature Ratings (ANSI B 16.34-2004)

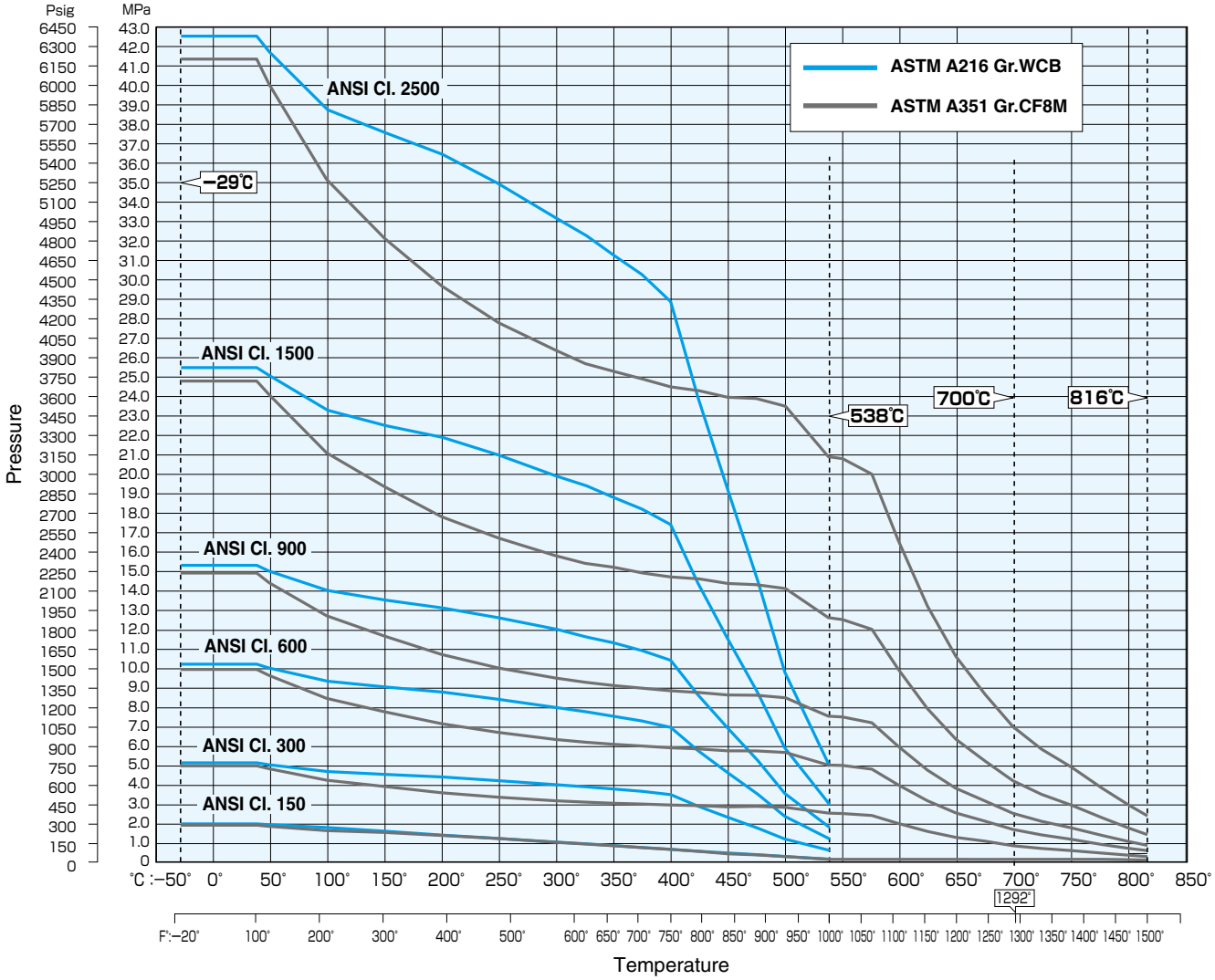

Allowable Seat Leakage Rates by Standard

Gas Test

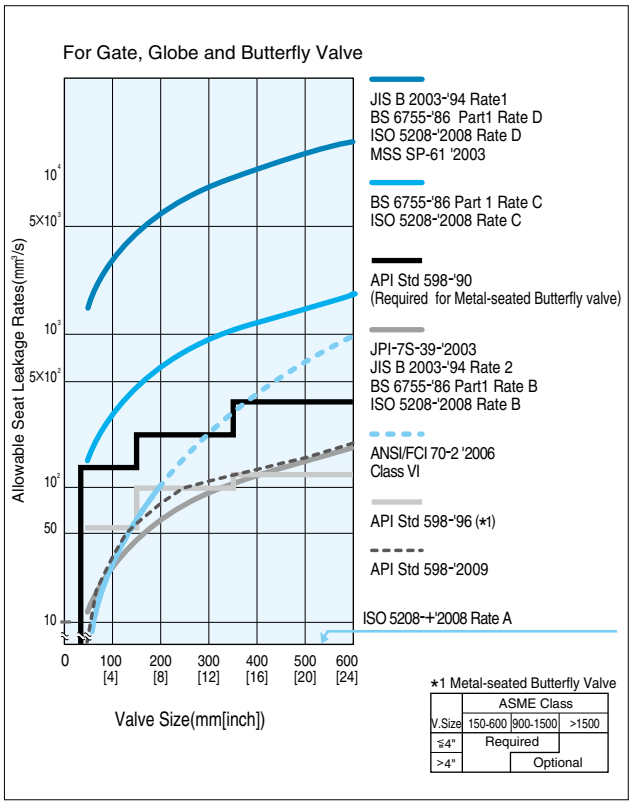

*1 Metal-seated Butterfly Valve

V.Size	ASME Class 150-600	900-1500	>1500
≤4"	Required		
>4"			Optional

Hydrostatic Test

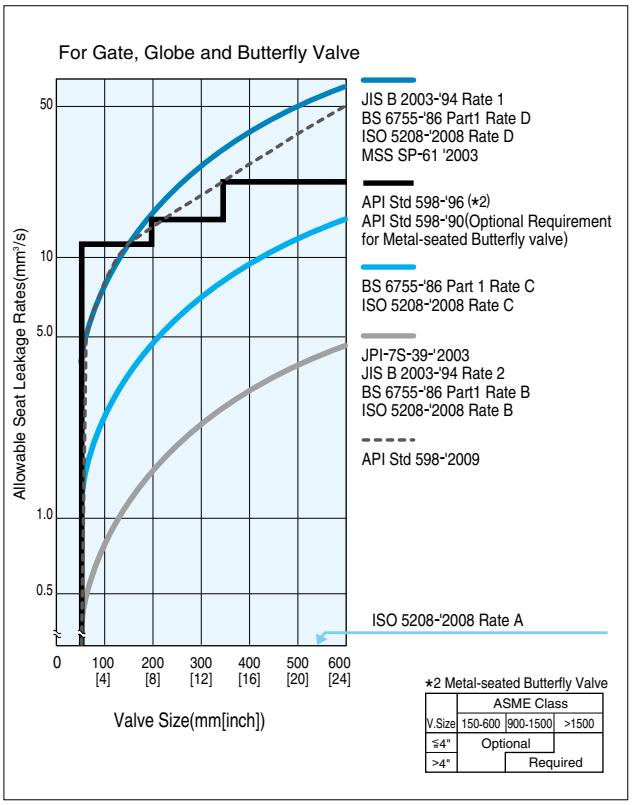

*2 Metal-seated Butterfly Valve

V.Size	ASME Class 150-600	900-1500	>1500
≤4"	Optional		
>4"			Required

Allowable Seat Leakage Rates by Standard

Gas Test

REFERENCE

Valve size: 200mm (cc/min converted)

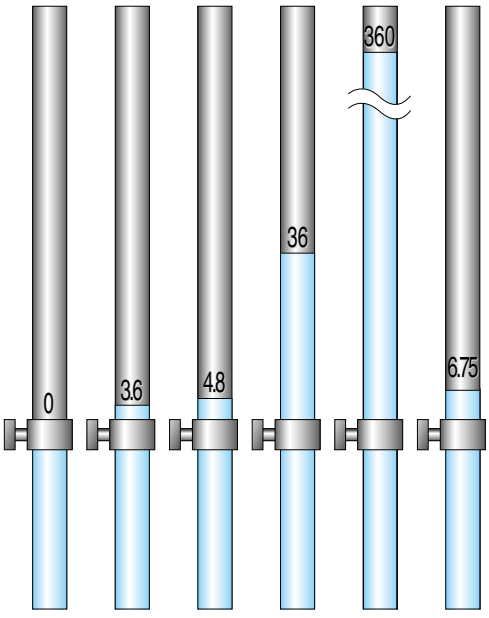

Standard	ISO 5208-'2008 Rate A	ISO 5208-'2008 Rate B	API Std 598-'2009	ISO 5208-'2008 Rate C	ISO 5208-'2008 Rate D	ANSI / FCI 70-2 Class VI
Test Pressure	6±1bar	6±1bar	4~7bar	6±1bar	6±1bar	3.5 bar or Max. Differential Pressure whichever is the least

Hydrostatic Test

REFERENCE

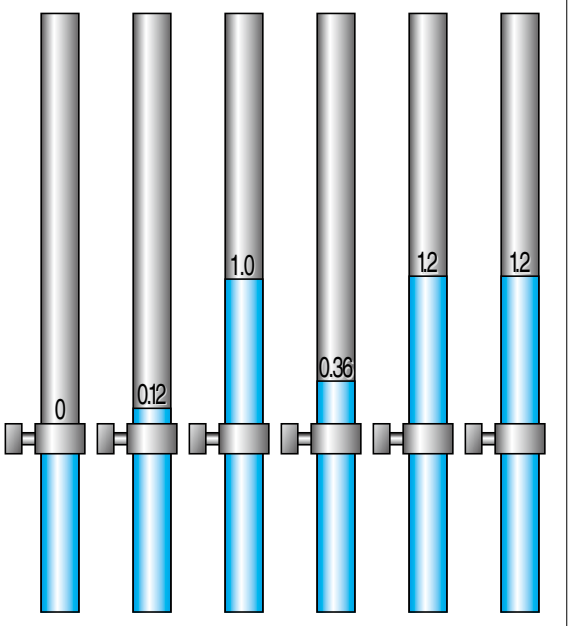

Standard	ISO 5208-'2008 Rate A	ISO 5208-'2008 Rate B	API Std 598-'2009	ISO 5208-'2008 Rate C	ISO 5208-'2008 Rate D	ANSI / FCI 70-2 Class V
Test Pressure	Max.Working Pressure× 1.1	Max.Working Pressure× 1.1	Design Differential Pressure× 1.1	Max.Working Pressure× 1.1	Max.Working Pressure× 1.1	Max.Working Pressure(20 bar)

Operating and Maintenance Instructions

	No	Description	Q'ty
	1	Body	1
	2	Disc	1
★	3	Body Seat	1
	4	Body Seat Retaining Ring	1
★	5	Body Seat Gasket	1
	6	Disc Seal	1
	7	Disc Seal Gasket	1
	8	Shaft	1
	9	Shaft pin	2−4
	10	Bearing	4
	11	Thrust Ring	1−2
◎	12	Thrust Pad	1
	13	End Cover	1
	14	End Cover Gasket	1
	15	Gland Plate	1
	16	Gland Plate Spigot	1

◎ : Please refer to specific drawings

	No	Description	Q'ty
	17	Mounting Plate	1
	18	Dowel Pin	2−4
	19	Nameplate	1−2
	22	Disc Seal Screw	1set
◎	23	Thrust Pad Screw	2−3
	24	Body Seat Screw	1set
	25	Mounting Plate Screw	4−6
	26	End Cover Screw	4~
	27	Gland Stud	2
	29	Gland Nut	2
★	33	Gland Packing	3
★	34	Gland Packing	2
	35	Key	1
	38	Anti-bowout Device	1−2

★ : Recommended Spare Parts

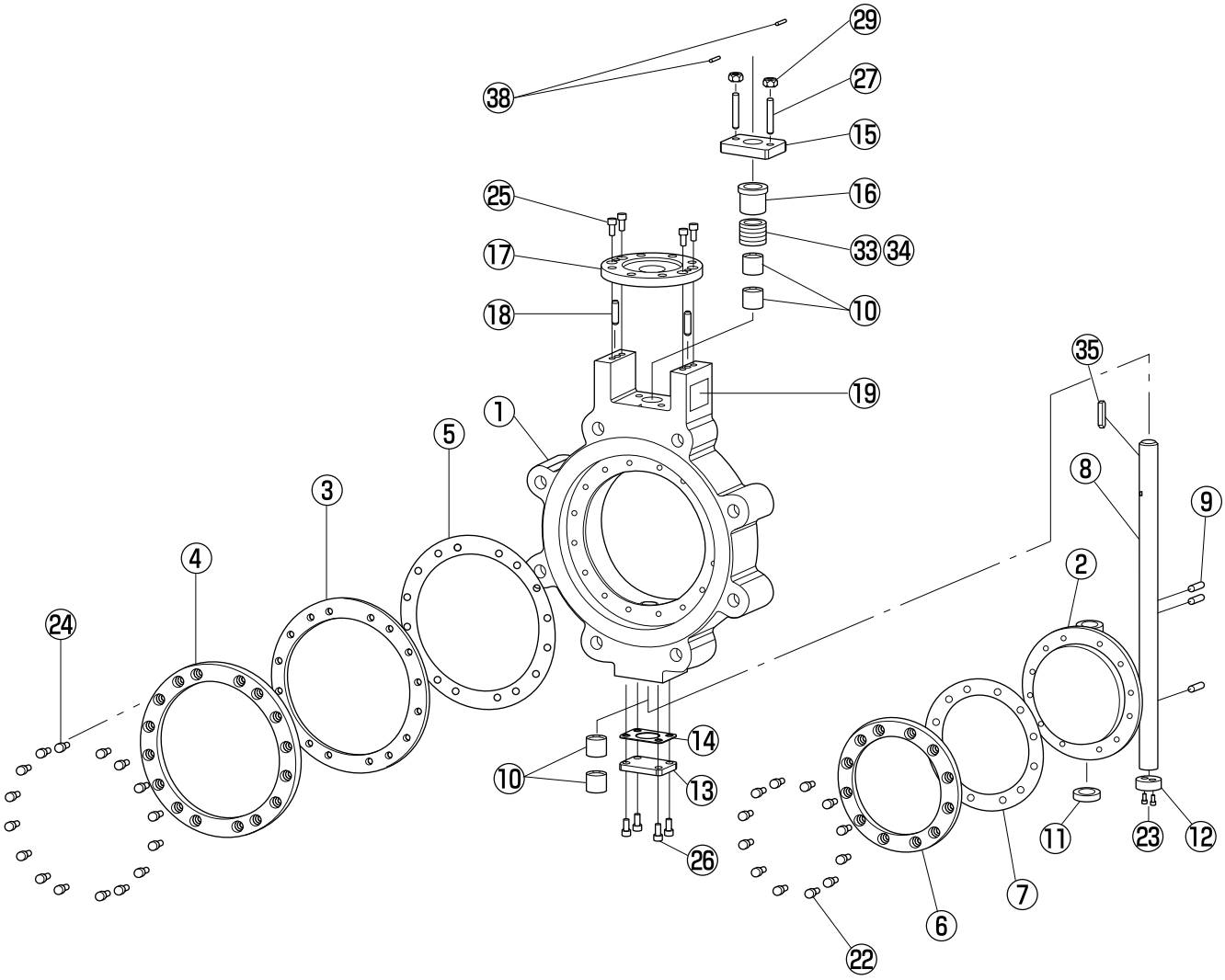

INTRODUCTION

This instruction provides general information on the operation, installation and maintenance of the Tritec triple offset valve. The Tritec valves have been designed and manufactured to operate in an aggressive environment under extremes of temperature and pressure for long periods and with minimal maintenance.

INSTRUCTIONS

PACKING

1. All valves will be despatched with protective covers attached to the flange faces to protect the gasket sealing surfaces and internal trim.
2. The valve disc is cracked off the seat in the almost closed position.
3. The Tritec nameplate shown in the picture contains information such as size,pressure class,materials and the unique serial number.

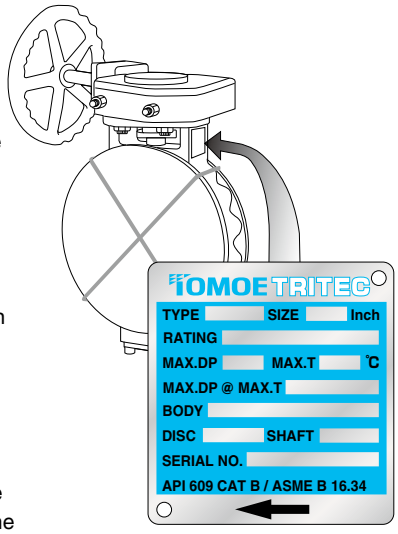

SPARE PARTS

1. When ordering spare parts or discussing matters concerning this valve with the sales office, it is essential to quote the unique Serial Number of the valve which is to be found on the stainless steel nameplate attached to the valve body adjacent to the operator.

TRANSPORTATION

1. Use crates or packing cases for ocean transportation.
2. For overland transportation, a covered vehicle is recommended with protective sheets covering the valves.

STORAGE

1. Store the valves indoors in a cool temperature between –10˚ and+60˚C, humidity at 70% or less.
2. Do not remove the protective covers until ready to install valves.
3. Machined ferrous surfaces are protected with an approved rust preventative. For long periods of storage, apply the rust preventative once a year to the unpainted surfaces.
4. When storing valves unpacked, take care in protecting valves and actuators from excessive loads. Do not stack unpacked valves.
5. If the valve is for clean gas duty and is being supplied "DEGREASED",a label is attached stating this and the valve sealed in a polythene covering. It is suggested that the valve is kept packed until it is to be installed in the pipeline.

UNPACKING

1. Unpack valves just before installation.

INSTALLATION

ⓐ The valve is designed to seal against bidirectional flow and can therefore be installed with flow in either direction. However enhanced sealing life will be obtained with upstream flow against the shaft side of the disc. This preferred flow direction is shown on the nameplate attached to the valve body adjacent to the operator and also on the GA drawing. The valve may be installed in the pipeline with the valve shaft in a horizontal,vertical or intermediate position.

ⓑ Prior to installation,the pipeline must be cleaned from dirt and welding residues to avoid damage to the valve during operation.

ⓒ Ensure that the valve is closed prior to installation to avoid the risk of damage to the sealing surfaces.

ⓓ The valve must be lifted by the eyebolt or lifting eyes provided with the valve.

ⓔ The valve must not be lifted by the operator or handwheel.

ⓕ The valve must not be used for pipework alignment.

ⓖ The Lugged or Double flanged type valve is suitable for dead end service ie.end of line duty,in either direction (in case of the valve specified both directions) to the full rating pressure of the piping system.

TT2

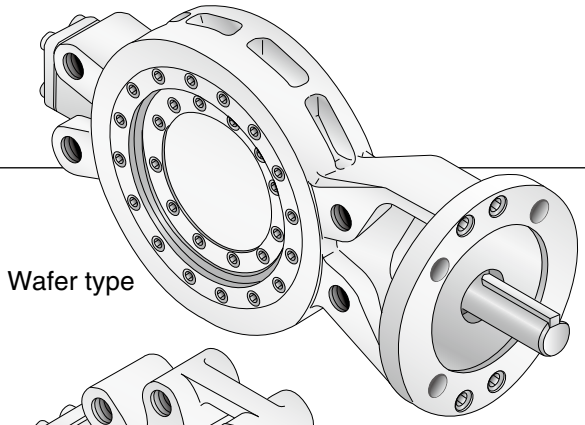

Wafer type

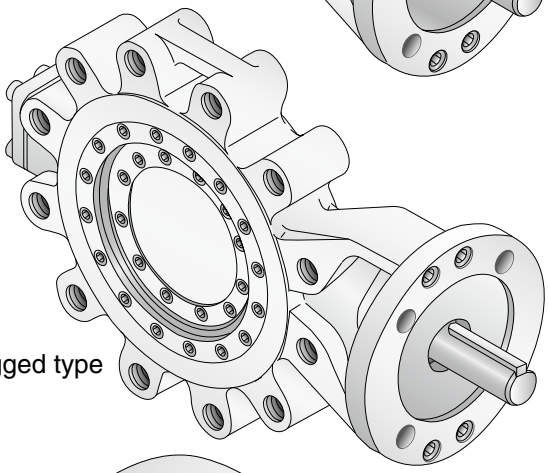

Lugged type

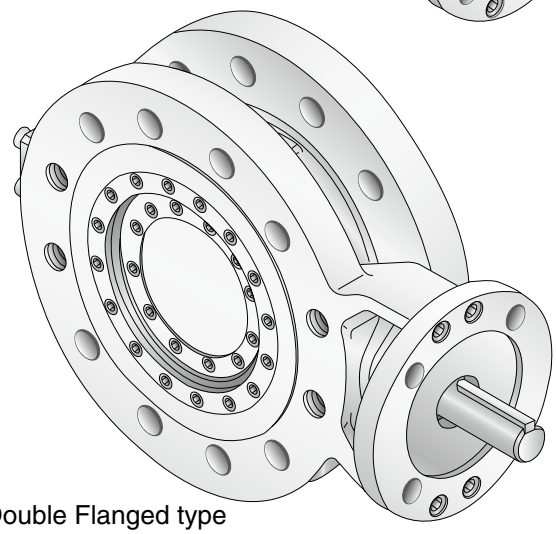

Double Flanged type

Valve nominal size

80 to 600mm

Max.working pressure MPa



Working temperature range ˚C

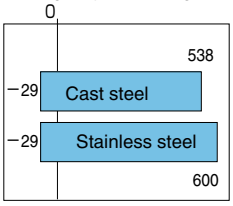

FS Fire safe certification to API607 5th Edition

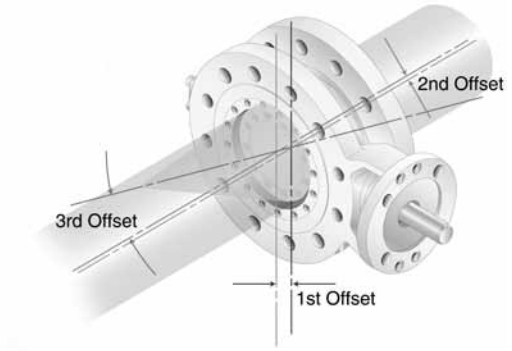

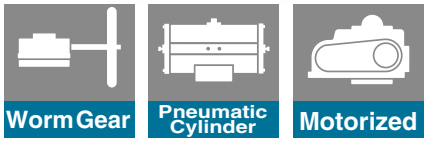

Always at the leading edge

Through an extensive commitment to Research & Development, TOMOE has remained at the leading edge of valve design for more than 50 years. The TT2 Triple Offset process valve is the result of advanced technology design and stringent testing to develop a valve that meets the high performance demands of applications where long life and positive shut-off under arduous conditions is essential.

The TT2 inherits the torque sealing, friction-free sealing design of other valves in the TT series and the unique triple offset and ellipsoidal sealing geometry guarantees zero leakage and bubble-tight shut-off.

In addition, the compact, lightweight design of the TT2 triple offset valve has revolutionised design and maintenance of piping systems in the OPC industry.
Smaller and lighter than traditional ball, globe and gate valves, the TT2 features a fully field-replaceable seat and seal design for increased plant efficiency and reduced cost of ownership.

Available in Wafer, Lugged and Double Flanged type body styles to 150 lb and 300 lb pressure ratings, the TT2 triple offset valve has fire safe certification to API607 5th Edition, making it inherently safe in high risk industry applications.

Features and Benefits

- Zero leakage with metal seat
- Compact, lightweight design
- Fully field replaceable seat and seal design
- Longer life cycle
- Fire Safe Certification to API607 5th Edition

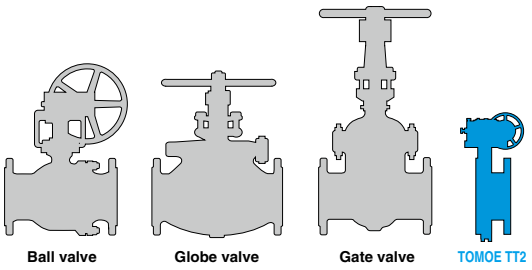

Pressure-Temperature Ratings

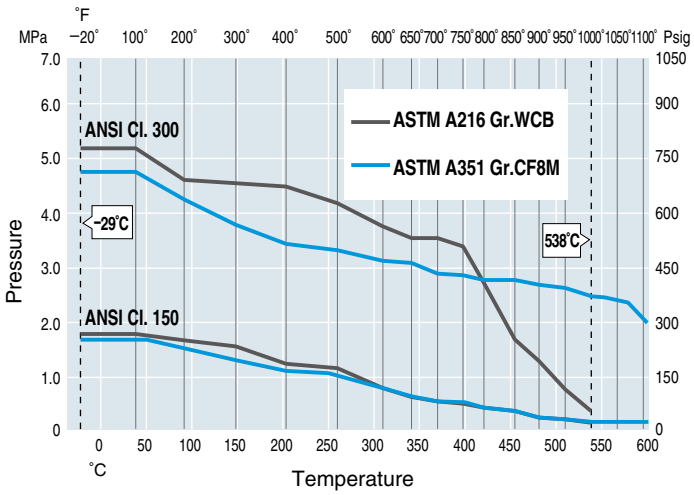

Standard Specifications

Design		API 609 Cat. B, ASME B16.34
Nominal diameter※1		3"(80mm) to 24"(600mm)
Pressure rating		Class 150, Class 300
Body style		Wafer, Lugged and double flanged, short and long
Applicable flange standard※2		ASME B16.5/JPI Class 150/300 JIS 10/16/20/30K BS4504 (DIN) PN10/16/25/40
Face-to-face dimensions※3		Wafer, Lugged : API609 Category B Class 150/300. Double flanged : ISO 5752/API 609 Category B, double flanged short pattern Class 150/300
Pressure-temperature rating※4		ASME B16.34 Class 150, 300lb, API609 Class 150, 300lb. Operating temperature (standard specifications): -29 to 538 degrees C (A216-WCB), -29 to 600 degrees C (A351 CF8M)
Pressure test		Main body pressure and seat leakage test: API598. Allowable seat leakage: Preffered; API 598, ISO 5208 rate A, ANSI/FCI 70-2 Class VI. Reverse; API 598, ISO 5208 rate A, ANSI/FCI 70-2 Class VI.
Fire safe		Fire Safe Certification based on API 607 4th / 5th Edition
Actuator		Manual Gear, Electric, Pneumatic, Hydraulic
Flow direction		Bi-directional (However, the standard pressure direction is for high pressure at the stem side. Selection of the drive section will differ depending on the pressure direction.)
Applicable gaskets		Use a spiral gasket. ASME B16.5/JPI Class 150/300 commercial products may be used. Please consult us regarding JIN, BS and DIN.
Standard materials	Body	A216 WCB or A351 CF8M
	Disc	A216 WCB or A351 CF8M
	Stem※5	A564 type 630 H1150+H1150
	Body seat	316SS / Graphite
	Disc seal※6	316SS
Coating		Silicon resin coating (Grey N7) for 200 degrees C and lower. Heat resistant silver coating for over 200 degrees C. No painting for stainless steel.

※1 Except for 5" (125mm), 22" (550mm)
※2 Please consult us regarding JIN, BS and DIN lugs and double flange types
※3 Long-pattern types can be manufactured to your desired specifications
※4 400 degrees C or less in an oxidized atmosphere
※5 Use Inconel 718 for over 400 degrees C.
※6 Titanium nitride hardened, Stellite #6 welding is available as an option
※ Valve stem position : horizontal position.

TT2 Expanded view of components

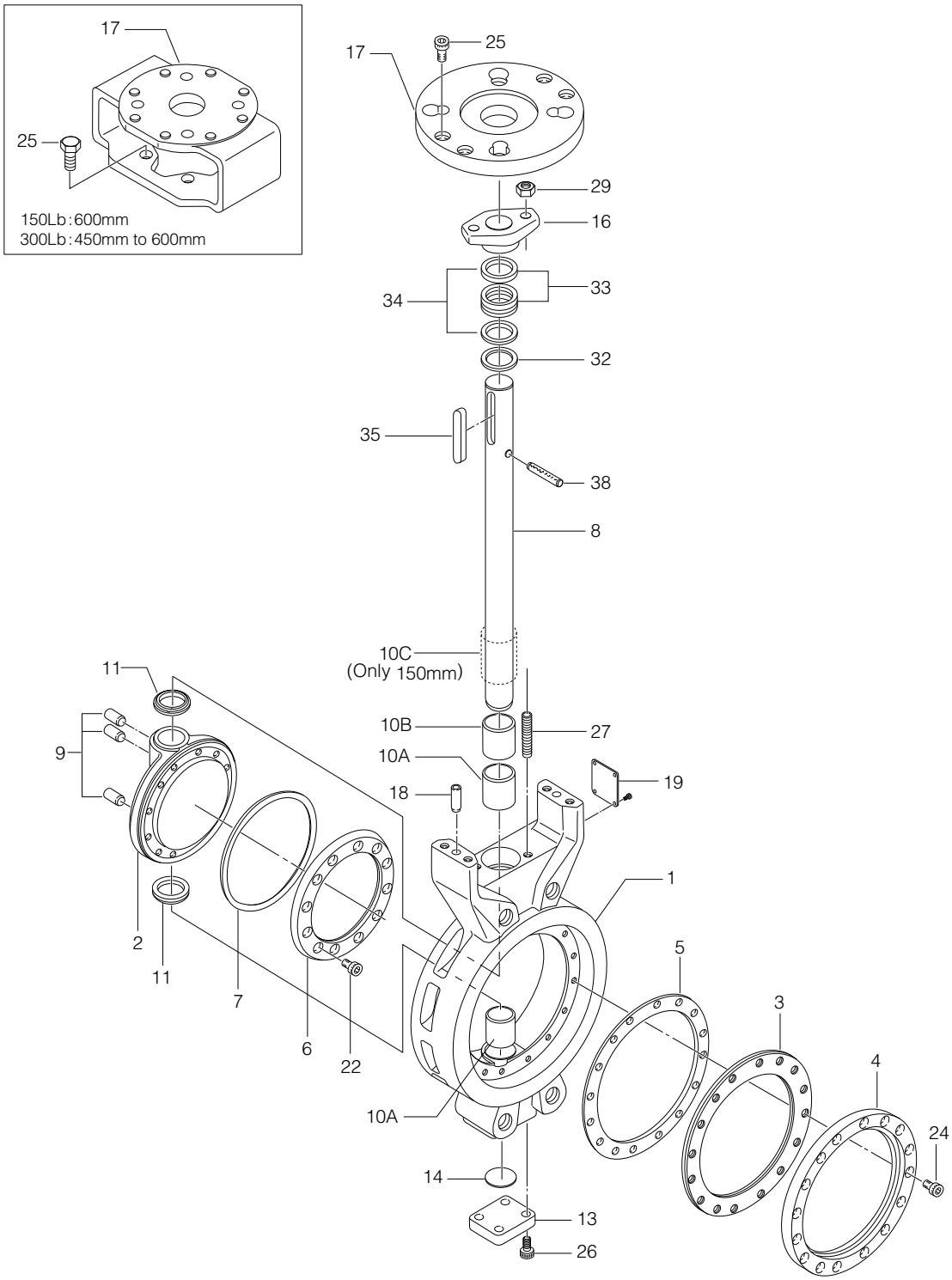

■TT2 Parts list (150Lb : 80mm to 500mm) (300Lb : 80mm to 400mm)

No.	Description		Q'ty	Remarks
1	Body		1	
2	Disc		1	
3	Body seat		1	
4	Retainer		1	
5	Body seat gasket		1	
6	Disc seal		1	
7	Disc seal gasket		1	
8	Stem		1	
9	Shaft pin		3	
10A	Bearing A		2	
10B	Bearing B		0 or 1	150Lb : 80,100mm : 1 150mm over : 0
				300Lb : 1
10C	Bearing spacer		0 or 1	150Lb : 150mm over : 1
				300Lb : 150mm : 1
11	Thrust ring		2	
13	Bottom cover		1	
14	Bottom gasket		1	
16	Glandplate spigot		1	
17	Mounting plate		1	
18	Dowel pin		2	
19	Nameplate		1	
22	Hexagon hole bolt	80mm to 200mm	4	80mm
			6	100mm
			8	150mm
			12	200mm
		250mm to 400mm	8	250mm
			12	300mm, 350mm
			16	400mm
24	Hexagon hole bolt	80mm to 200mm	8	80mm
			12	100mm, 150mm
			16	200mm
		250mm to 400mm	20	250mm
			24	300mm
			28	350mm
			32	400mm
25	Hexagon hole bolt		4	
26	Hexagon hole bolt		4	
27	Gland bolt		2	
29	Hexagon nut		2	
32	Packing retainer		1	
33	Gland packing		3	
34	Gland packing		2	
35	Key		1	
38	Spring pin		1	

■TT2 Parts list (150Lb : 600mm) (300Lb : 450mm to 600mm)

No.	Description	Q'ty	Remarks
1	Body	1	
2	Disc	1	
3	Body seat	1	
4	Retainer	1	
5	Body seat gasket	1	
6	Disc seal	1	
7	Disc seal gasket	1	
8	Stem	1	
9	Shaft pin	3	
10A	BearingA	2	
10B	BearingB	1	300Lb
10C	Bearing spacer	1	150Lb
11	Thrust ring	2	
13	Bottom cover	1	
14	Bottom gasket	1	
16	Glandplate spigot	1	
17	Bracket	1	
19	Nameplate	1	
22	Hexagon hole bolt	16	450mm, 600mm
		12	500mm
24	Hexagon hole bolt	20	450mm, 500mm
		28	600mm
25	Hexagon hole bolt	4	
26	Hexagon hole bolt	4	
27	Gland bolt	2	
29	Hexagon nut	2	
32	Packing retainer	1	
33	Gland packing	3	
34	Gland packing	2	
35	Key	1	
38	Spring pin	1	

TT2-150Lb Bare shaft（Wafer type）

Nominal size		Dimension (mm)																		Approx. Mass (kg)
mm	inch	φd	φD	L	L_1	K_1	K_2	H_1	H_2	S	a_3	t	$φD_1$	n	BH	$φC_1$	$φd_2$	b	t_2	
80	3	82	127	48	29	3	23.1	120.6	159	110	34	12	125	4	11	102	18	6	2.5	7
100	4	108	154	54	31.5	9	27.0	144.6	194	132	34	12	125	4	11	102	20	6	2.5	11
150	6	159	215	57	35	25.5	45.5	189.6	242	180	34	12	125	4	11	102	22	6	2.5	18
200	8	202	266	64	39	46.7	67.4	199.6	248	180	64	14	175	4	11	102	26	8	3	27
250	10	235	324	71	43	63.5	86.5	245.6	326	252	64	14	175	4	13	125	30	8	3	45
300	12	290	373	81	48.5	84	109	281.6	376	281	79	20	210	4	22	165	37	10	3	66
350	14	329	413	92	52	95.5	117.5	307.6	400	305	79	20	210	4	22	165	37	10	3	82
400	16	370	470	102	63	108.3	144.3	345.6	470	355	79	25	226	4	22	165	45	14	3.5	107
450	18	432	534	114	68	120.6	158.4	383.6	510	395	79	25	226	4	22	165	52	16	4	160
500	20	488	585	127	79	131.3	178.3	410.6	531	416	79	25	226	4	22	165	52	16	4	188
600	24	576	692	154	89	167.5	209.5	469.6	643	493	117	20	300	8	19	254	65	18	4	306

■150Lb Wafer type 80mm to 500mm

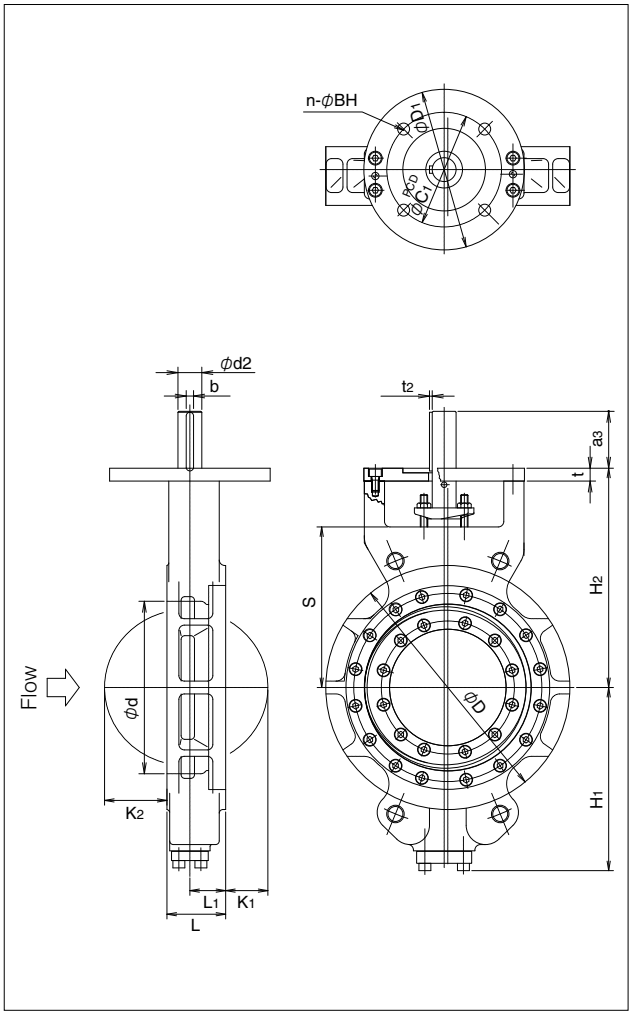

■150Lb Wafer type 600mm

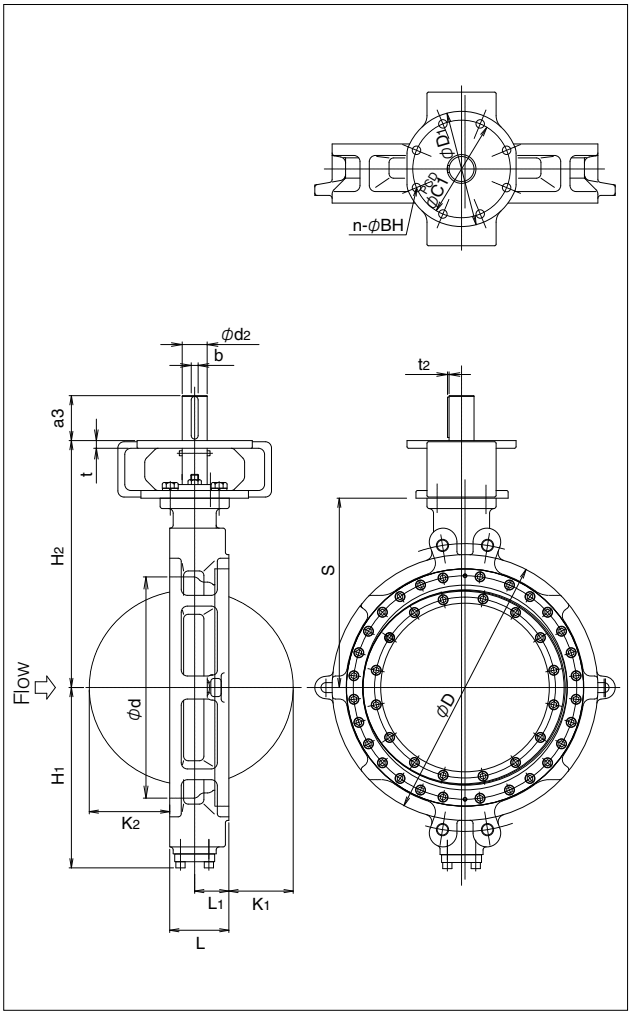

TT2-150Lb Bare shaft（Full Lugged type）

Nominal size		Dimension (mm)																				Approx. Mass (kg)
mm	inch	φd	φD	L	L_1	L_3	L_4	K_1	K_2	H_1	H_2	S	a_3	t	ϕD_1	n	BH	ϕC_1	ϕd_2	b	t_2	
80	3	100	185	48	29	42	4	3	23.1	120.6	159	110	34	12	125	4	11	102	18	6	2.5	7
100	4	117	238	54	31.5	46.5	5	9	27	144.6	194	132	34	12	125	4	11	102	20	6	2.5	13
150	6	167	281	57	35	51.5	3.5	25.5	45.5	189.6	242	180	34	12	125	4	11	102	22	6	2.5	21
200	8	218	338	64	39	55	7	46.7	67.4	199.6	248	180	64	14	175	4	11	102	26	8	3	29
250	10	270	424	71	43	63	4	63.5	86.5	245.6	326	252	64	14	175	4	13	125	30	8	3	52
300	12	320	478	81	48.5	71	5	84	109	281.6	376	281	79	20	210	4	22	165	37	10	3	76
350	14	350	526	92	52	79	6.5	95.5	117.5	307.6	400	305	79	20	210	4	22	165	37	10	3	91
400	16	410	592	102	63	92	5	108.3	144.3	345.6	470	355	79	25	226	4	22	165	45	14	3.5	134
450	18	460	634	114	68	98	10	120.6	158.4	383.6	510	395	79	25	226	4	22	165	52	16	4	185
500	20	510	714	127	79	107	10	131.3	178.3	410.6	531	416	79	25	226	4	22	165	52	16	4	225
600	24	614	830	154	89	136	9	167.5	209.5	469.6	643	493	117	20	300	8	19	254	65	18	4	393

■150Lb Full Lugged 80mm to 500mm

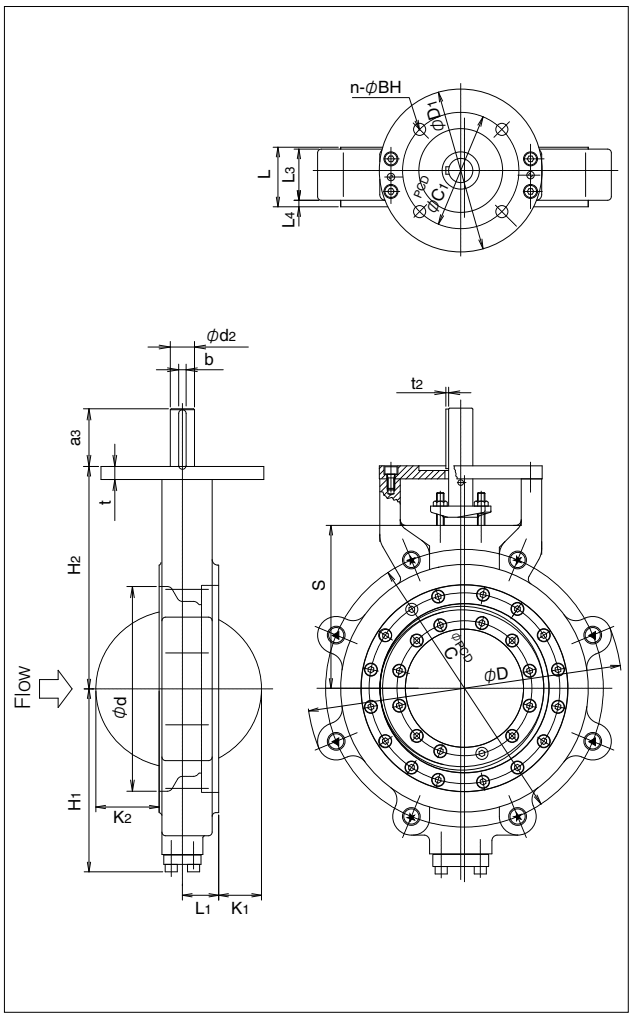

■150Lb Full Lugged 600mm

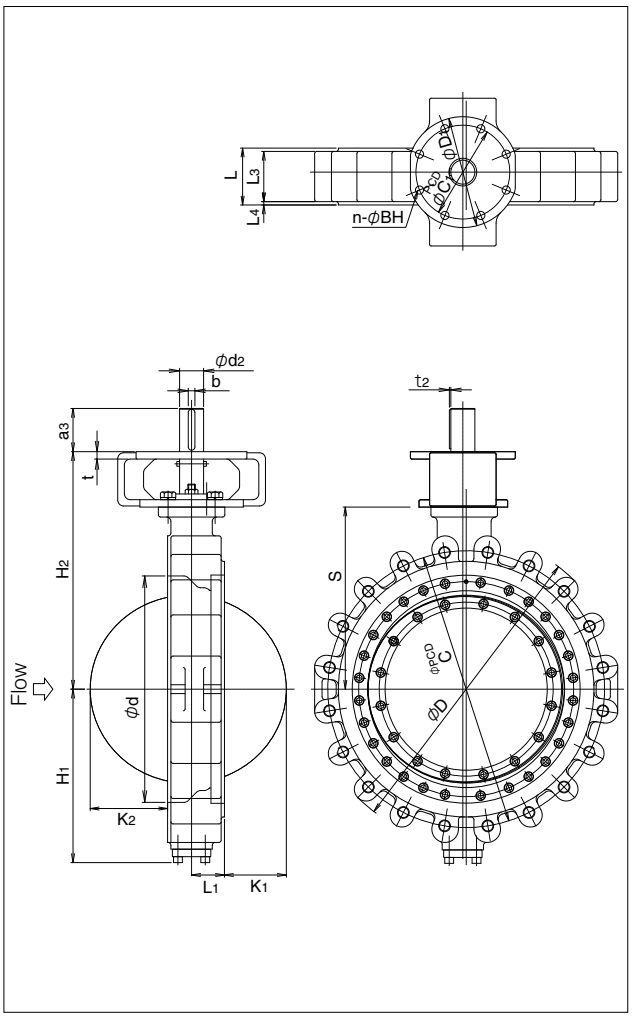

TT2-150Lb Bare shaft（Flanged type）

Nominal size		Dimension (mm)																			Approx. Mass (kg)
mm	inch	φd	φD	L	L_1	K_1	K_2	T_1	H_1	H_2	S	a_3	t	$φD_1$	n	BH	$φC_1$	$φd_2$	b	t_2	
80	3	90	190	114	29	3	0	25.5	120.6	159	110	34	12	125	4	11	102	18	6	2.5	15
100	4	117	229	127	31.5	9	0	25	144.6	194	132	34	12	125	4	11	102	20	6	2.5	21
150	6	167	279	140	35	25.5	0	27	189.6	242	180	34	12	125	4	11	102	22	6	2.5	35
200	8	218	343	152	39	46.7	0	29	199.6	248	180	64	14	175	4	11	102	26	8	3	49
250	10	270	406	165	43	63.5	0	32	245.6	326	252	64	14	175	4	13	125	30	8	3	77
300	12	320	483	178	48.5	84	12	33	281.6	376	281	79	20	210	4	22	165	37	10	3	117
350	14	350	535	190	52	95.5	19.5	36	307.6	400	305	79	20	210	4	22	165	37	10	3	155
400	16	410	595	216	63	108.3	30.3	37	345.6	470	355	79	25	226	4	22	165	45	14	3.5	194
450	18	458	635	222	68	120.6	50.4	40	383.6	510	395	79	25	226	4	22	165	52	16	4	237
500	20	510	700	229	79	131.3	76.3	43	410.6	531	416	79	25	226	4	22	165	52	16	4	312
600	24	614	815	267	89	167.5	96.5	48	469.6	643	493	117	20	300	8	19	254	65	18	4	432

■150Lb Flanged 80mm to 500mm

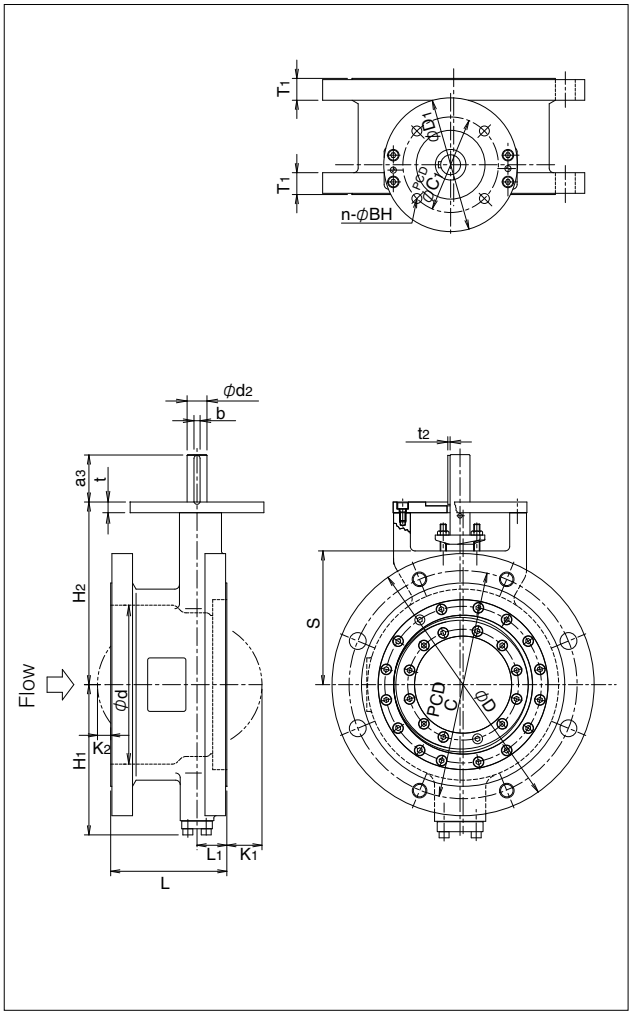

■150Lb Flanged 600mm

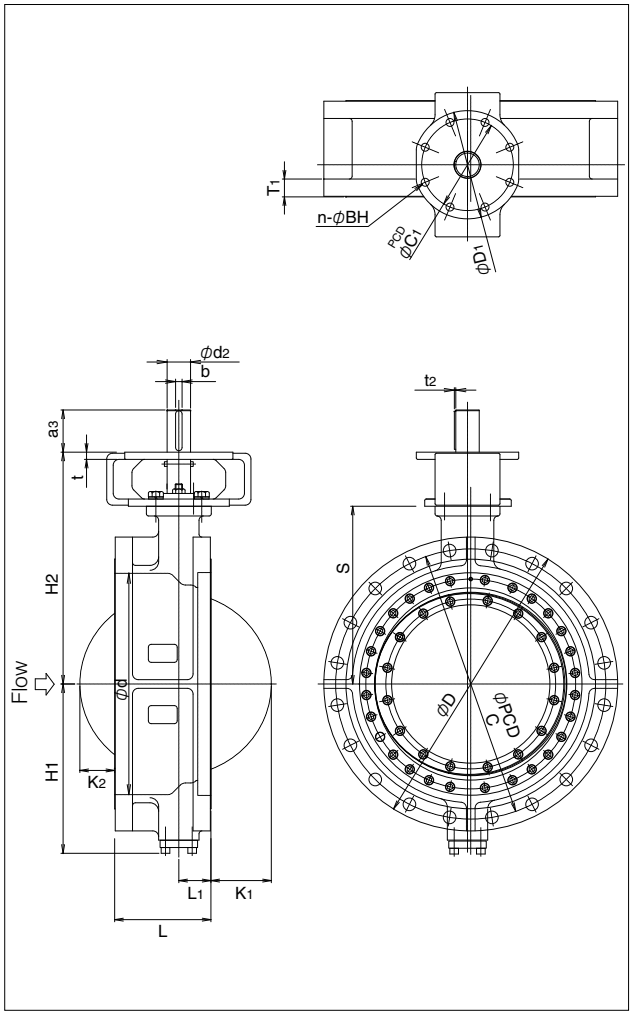

TT2-300Lb Bare shaft（Wafer type）

Nominal size		Dimension (mm)																		Approx. Mass (kg)
mm	inch	φd	φD	L	L_1	K_1	K_2	H_1	H_2	S	a_3	t	ϕD_1	n	BH	ϕC_1	ϕd_2	b	t_2	
80	3	82	127	48	29	3	23.1	120.6	159	110	34	12	125	4	11	102	18	6	2.5	7
100	4	108	154	54	31.5	9	27	144.6	194	132	34	12	125	4	11	102	20	6	2.5	11
150	6	153	215	59	36.5	24	45	188.6	276	212	64	14	175	4	11	102	26	8	3	23
200	8	188	270	73	44	41.7	63.4	217.6	285	205	79	20	210	4	18	140	32	10	3	37
250	10	235	324	83	47.5	59	79	259.6	355	260	79	20	210	4	22	165	37	10	3	59
300	12	290	381	92	53	79.5	102.5	305.6	428	313	79	25	226	4	22	165	45	14	3.5	89
350	14	329	413	117	60.5	87	101	340.6	460	345	79	25	226	4	22	165	52	16	4	113
400	16	370	470	133	71	100.3	121.3	373.6	518	388	109	32	300	8	18	254	60	18	4	166
450	18	426	534	149	79	109.6	134.4	400.6	574	424	117	20	300	8	22	254	70	20	4.5	231
500	20	476	592	159	85	125.3	152.3	441.6	602	452	136	20	300	8	22	254	75	20	4.5	292
600	24	564	693	181	100	156.5	193.5	514.6	678	528	136	20	300	8	22	254	85	22	5	416

■300Lb Wafer 80mm to 400mm

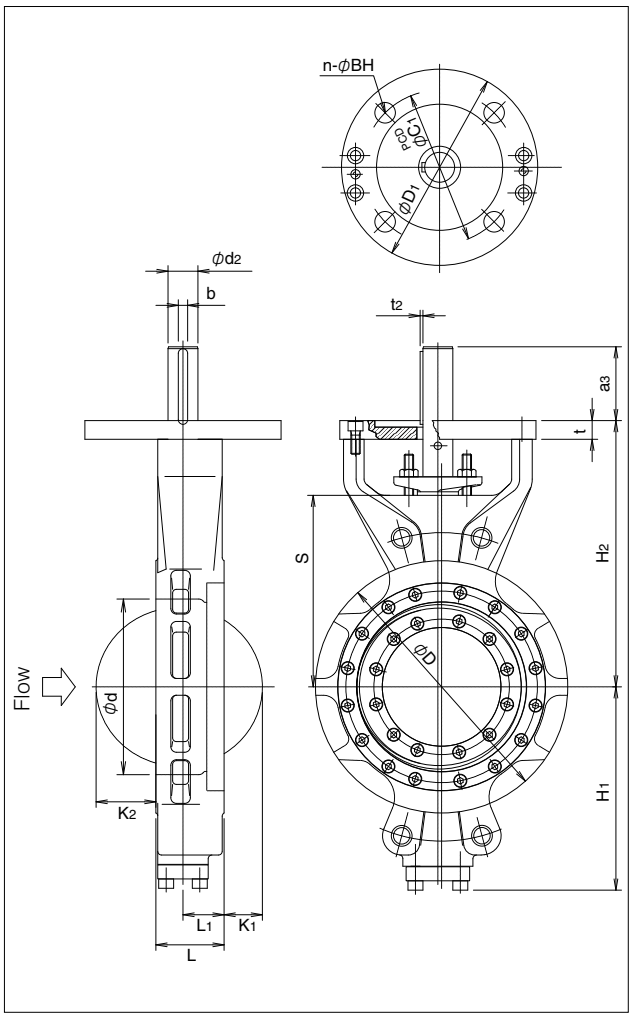

■300Lb Wafer 450mm to 600mm

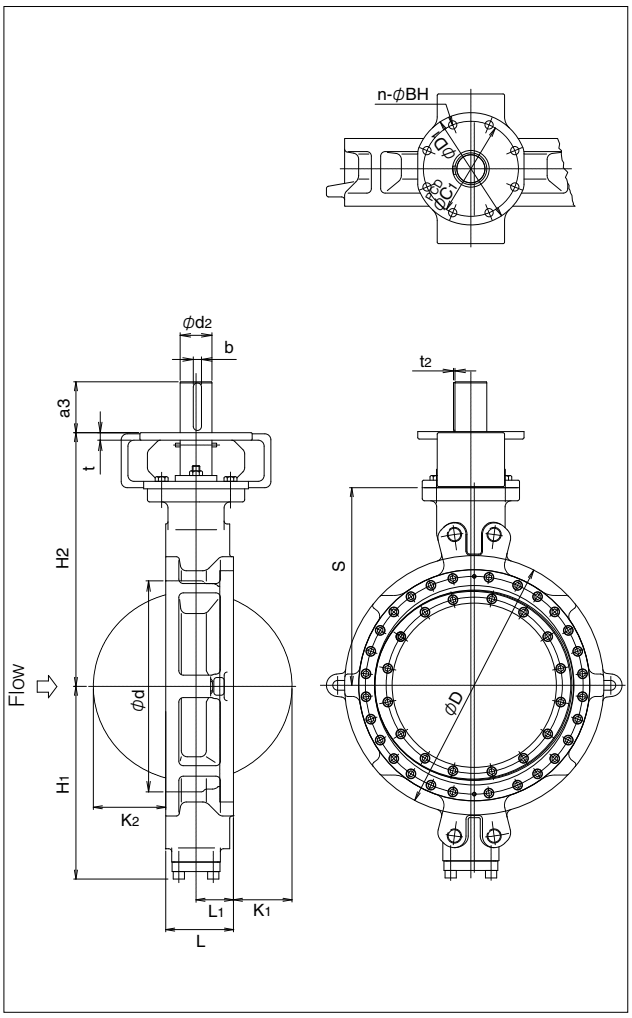

TT2-300Lb Bare shaft（Full Lugged type）

Nominal size		Dimension (mm)																				Approx. Mass (kg)
mm	inch	φd	φD	L	L_1	L_3	L_4	K_1	K_2	H_1	H_2	S	a_3	t	ϕD_1	n	BH	ϕC_1	ϕd_2	b	t_2	
80	3	82	204	48	29	42	4	3	23.1	120.6	159	110	34	12	125	4	11	102	18	6	2.5	8.4
100	4	117	238	54	31.5	47	5	9	27	144.6	194	132	34	12	125	4	11	102	20	6	2.5	13
150	6	166	312	59	36.5	52	5	24	45	188.6	276	212	64	14	175	4	11	102	26	8	3	24
200	8	220	374	73	44	69	2	41.7	63.4	217.6	285	205	79	20	210	4	18	140	32	10	3	44
250	10	275	435	83	47.5	75	4	59	79	259.6	355	260	79	20	210	4	22	165	37	10	3	71
300	12	320	503	92	53	82	5	79.5	102.5	305.6	428	313	79	25	226	4	22	165	45	14	3.5	105
350	14	360	570	117	60.5	109	4	87	101	340.6	460	345	79	25	226	4	22	165	52	16	4	163
400	16	400	630	133	71	125	4	100.3	121.3	373.6	518	388	109	32	300	8	18	254	60	18	4	225
450	18	460	690	149	79	137	6	109.6	134.4	400.6	574	424	117	20	300	8	22	254	70	20	4.5	327
500	20	513	748	159	85	141	8	125.3	152.3	441.6	602	452	136	20	300	8	22	254	75	20	4.5	375
600	24	613	887	181	100	161	10	156.5	193.5	514.6	678	528	136	20	300	8	22	254	85	22	5	560

■300Lb Full Lugged 80mm to 400mm

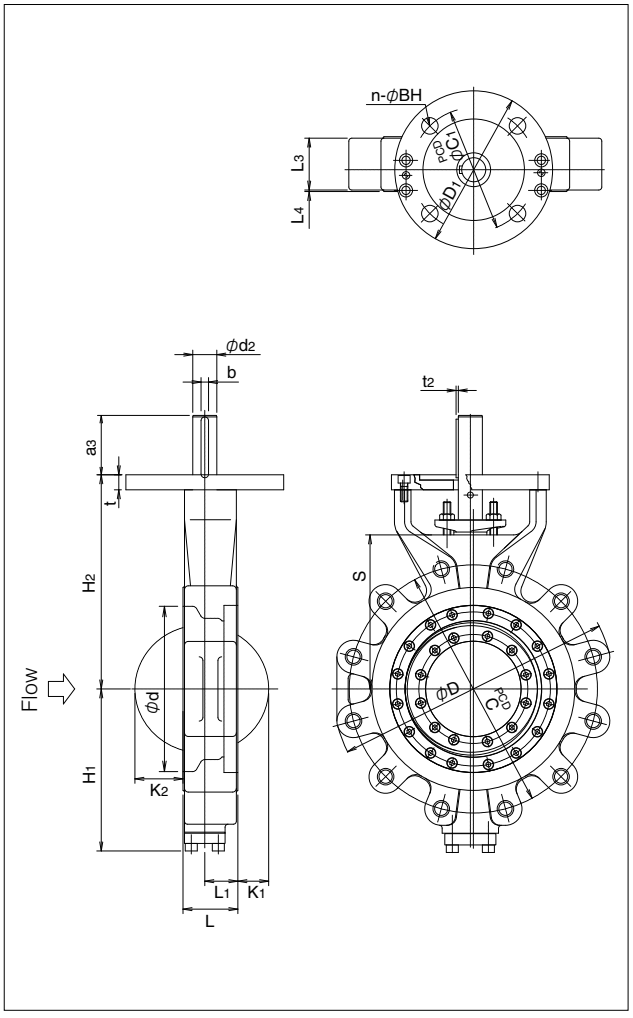

■300Lb Full Lugged 450mm to 600mm

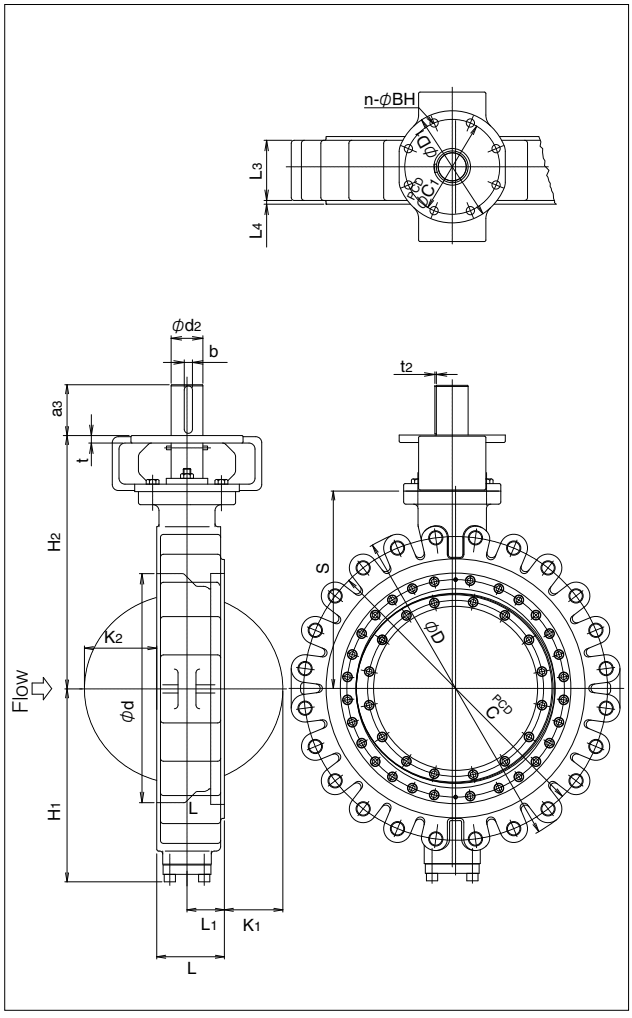

TT2-300Lb Bare shaft（Flanged type）

Nominal size		Dimension (mm)																			Approx. Mass (kg)
mm	inch	ϕd	ϕD	L	L_1	K_1	K_2	T_1	H_1	H_2	S	a_3	t	ϕD_1	n	BH	ϕC_1	ϕd_2	b	t_2	
80	3	90	210	114	29	3	0	29	120.6	159	110	34	12	125	4	11	102	18	6	2.5	17
100	4	117	254	127	31.5	9	0	32	144.6	194	132	34	12	125	4	11	102	20	6	2.5	28
150	6	166	318	140	36.5	24	0	37	188.6	276	212	64	14	175	4	11	102	26	8	3	48
200	8	208	381	152	44	41.7	0	42	217.6	285	205	79	20	210	4	18	140	32	10	3	78
250	10	275	444	165	47.5	59	0	48	259.6	355	260	79	20	210	4	22	165	37	10	3	114
300	12	310	520	178	53	79.5	16.5	51	305.6	428	313	79	25	226	4	22	165	45	14	3.5	175
350	14	360	585	190	60.5	87	28	55	340.6	460	345	79	25	226	4	22	165	52	16	4	235
400	16	410	648	216	71	100.3	38.3	58	373.6	518	388	109	32	300	8	18	254	60	18	4	302
450	18	460	710	222	79	109.6	61.4	61	400.6	574	424	117	20	300	8	22	254	70	20	4.5	407
500	20	513	775	229	85	125.3	82.3	64	441.6	602	452	136	20	300	8	22	254	75	20	4.5	491
600	24	613	915	267	100	156.5	107.5	70	514.6	678	528	136	20	300	8	22	254	85	22	5	724

■300Lb Flanged 80mm to 400mm

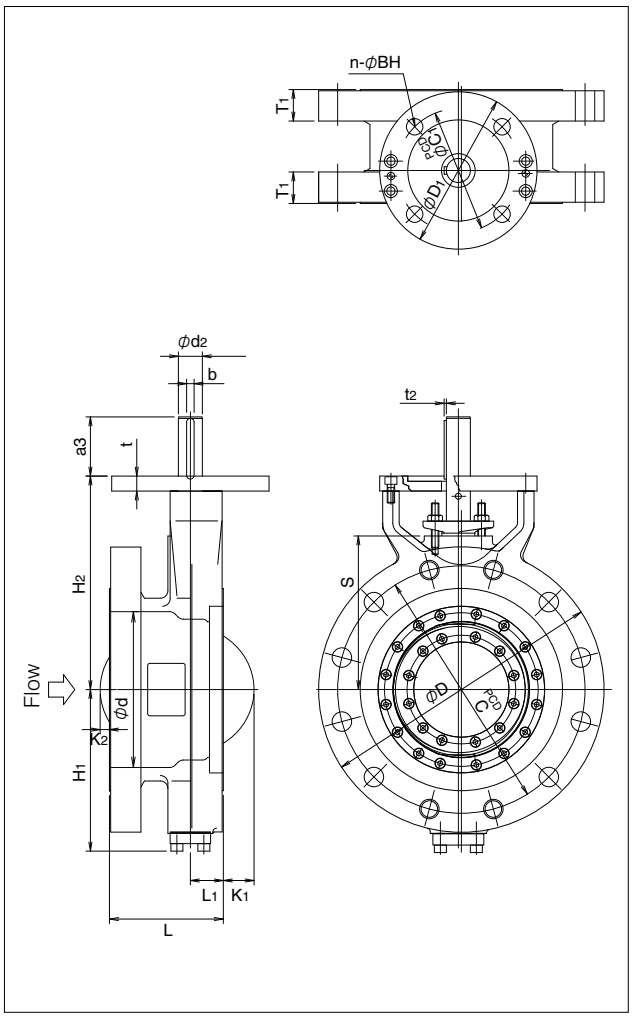

■300Lb Flanged 450mm to 600mm

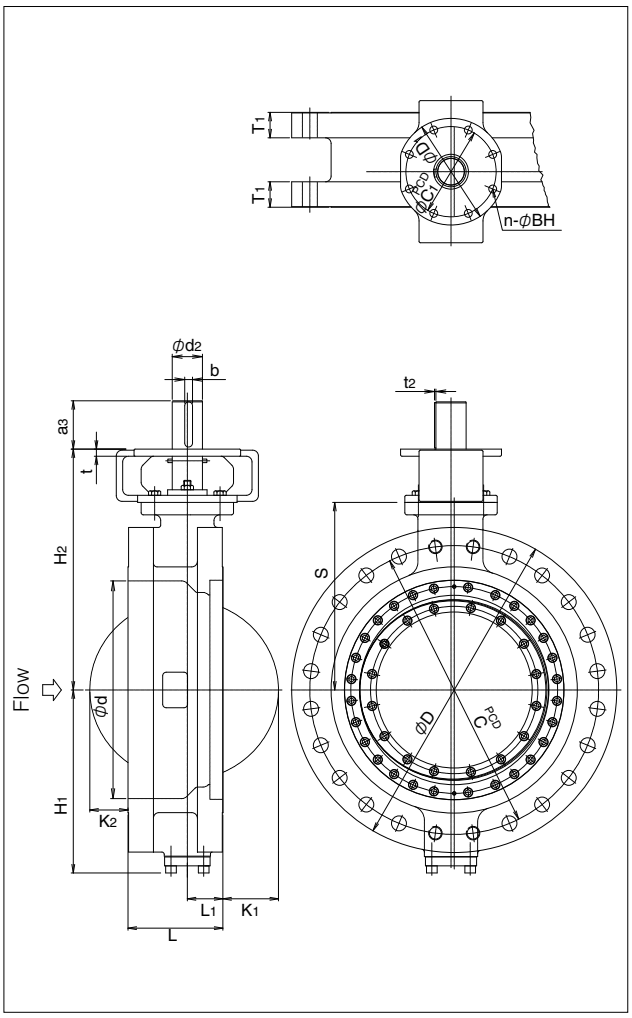

TT2 Actuator selection chart

■150 Lb/300 Lb Manual Gear

Nominal size		150 Lb class (Max. pressure: 2.0MPa)		300 Lb class (Max. pressure: 5.1MPa)	
mm	inch	Gear type	Handle diameter	Gear type	Handle diameter
80	3	2U - 3	200	2U - 3	200
100	4				
150	6				
200	8			SBWG-01	370
250	10	2U - 4	280	SBWG-02	450
300	12	SBWG-02	450	SBWG-03	550
350	14			SBWG-03-1S	
400	16	SBWG-03	550	SBWG-04-1S	710
450	18	SBWG-03-1S		SBWG-05-1S	
500	20			SBWG-05-1SD	
600	24	SBWG-04-1S	710	SBWG-06-1SD	900

■150 Lb Double-action Cylinder

Nominal size		150 Lb class (Max. pressure: 2.0MPa)					
		Normal-pressure (stem) side pressurization			Reverse-pressure (retainer) side pressurization		
		Closure pressure differential			Closure pressure differential		
mm	inch	1.0 MPa or less	Over 1.0 MPa 1.5 MPa or less	Over 1.5 MPa 2.0 MPa or less	1.0 MPa or less	Over 1.0 MPa 1.5 MPa or less	Over 1.5 MPa 2.0 MPa or less
80	3	T200			T380		
100	4						
150	6						
200	8	T750					
250	10	TGA-125			TGA-140		
300	12						
350	14	TGA-140		TGA-160			TGA-160
400	16		TGA-160		TGA-160		TGA-180
450	18	TGA-160	TGA-180			TGA-180	TGA-200
500	20			TGA-200	TGA-180	TGA-200	TGA-220
600	24	TGA-200	TGA-220	TGA-250	TGA-200	TGA-220	TGA-250

TT2 Actuator Selection Chart

■300 Lb, Recommended pressure direction (pressure from stem side), Double-action Cylinder

Nominal size		300 Lb class (Max. pressure: 5.1 MPa)								
		Normal-pressure (stem) side pressurization								
		Closure pressure differential								
mm	inch	1.0 MPa or less	Over 1.0 MPa 1.5 MPa or less	Over 1.5 MPa 2.0 MPa or less	Over 2.0 MPa 2.5 MPa or less	Over 2.5 MPa 3.0 MPa or less	Over 3.0 MPa 3.5 MPa or less	Over 3.5 MPa 4.0 MPa or less	Over 4.0 MPa 4.5 MPa or less	Over 4.5 MPa 5.1 MPa or less
80	3	T200					T380		T750	
100	4									
150	6	T750(TGA-125)							TGA-125	
200	8									
250	10	TGA-125							TGA-140	
300	12	TGA-140					TGA-160			TGA-180
350	14	TGA-160					TGA-180			TGA-200
400	16	TGA-180			TGA-200		TGA-220			
450	18			TGA-200	TGA-220		TGA-250			
500	20	TGA-200		TGA-220						
600	24	TGA-220	TGA-250							

■300 Lb, Non-recommended pressure direction (pressure from retainer side), Double-action Cylinder

Nominal size		300 Lb class (Max. pressure: 5.1 MPa)								
		Reverse-pressure (retainer) side pressurization								
		Closure pressure differential								
mm	inch	1.0 MPa or less	Over 1.0 MPa 1.5 MPa or less	Over 1.5 MPa 2.0 MPa or less	Over 2.0 MPa 2.5 MPa or less	Over 2.5 MPa 3.0 MPa or less	Over 3.0 MPa 3.5 MPa or less	Over 3.5 MPa 4.0 MPa or less	Over 4.0 MPa 4.5 MPa or less	Over 4.5 MPa 5.1 MPa or less
80	3	T200					T380		T750	
100	4									
150	6	T380								
200	8	TGA-125								TGA-140
250	10						TGA-140			TGA-160
300	12	TGA-160						TGA-180		
350	14									TGA-200
400	16	TGA-180			TGA-200		TGA-220			
450	18			TGA-200	TGA-220		TGA-250			
500	20	TGA-200		TGA-220						
600	24	TGA-220	TGA-250							

TT2 Actuator Selection Chart

■150Lb Single-action Cylinder

Nominal size		150 Lb class (Max. pressure: 2.0 MPa)					
		Normal-pressure (stem) side pressurization			Reverse-pressure (retainer) side pressurization		
		Closure pressure differential			Closure pressure differential		
mm	inch	1.0 MPa or less	Over 1.0 MPa 1.5 MPa or less	Over 1.5 MPa 2.0 MPa or less	1.0 MPa or less	Over 1.0 MPa 1.5 MPa or less	Over 1.5 MPa 2.0 MPa or less
80	3	T380S					
100	4	T750S					
150	6				TG-12S		
200	8						
250	10	TG-14S					
300	12						
350	14						
400	16	TG-20S					
450	18						
500	20						
600	24						

■300Lb • Recommended pressure direction (pressure from stem side), Single-action Cylinder

Nominal size		300 Lb class (Max. pressure: 5.1 MPa)								
		Normal-pressure (stem) side pressurization								
		Closure pressure differential								
mm	inch	1.0 MPa or less	Over 1.0 MPa 1.5 MPa or less	Over 1.5 MPa 2.0 MPa or less	Over 2.0 MPa 2.5 MPa or less	Over 2.5 MPa 3.0 MPa or less	Over 3.0 MPa 3.5 MPa or less	Over 3.5 MPa 4.0 MPa or less	Over 4.0 MPa 4.5 MPa or less	Over 4.5 MPa 5.1 MPa or less
80	3	T750S								TG-10S
100	4									
150	6	TG-12S								
200	8									
250	10						TG-14S			
300	12									
350	14	TG-20S								
400	16									
450	18									
500	20									
600	24									

TT2 Actuator Selection Chart

■300Lb • Non-recommended pressure direction (pressure from retainer side), Single-action Cylinder

Nominal size		300 Lb class (Max. pressure: 5.1 MPa)								
		Reverse-pressure (retainer) side pressurization								
		Closure pressure differential								
mm	inch	1.0 MPa or less	Over 1.0 MPa 1.5 MPa or less	Over 1.5 MPa 2.0 MPa or less	Over 2.0 MPa 2.5 MPa or less	Over 2.5 MPa 3.0 MPa or less	Over 3.0 MPa 3.5 MPa or less	Over 3.5 MPa 4.0 MPa or less	Over 4.0 MPa 4.5 MPa or less	Over 4.5 MPa 5.1 MPa or less
80	3	T750S								
100	4	TG-10S								
150	6	TG-12S								
200	8	TG-14S								
250	10									
300	12	TG-20S								
350	14									

TT2 Actuator Mounting Finished by Tempeature

■300Lb-80 to 400mm, 150Lb-80 to 500mm

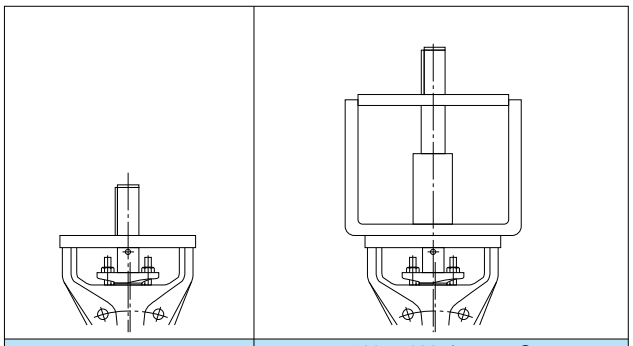

	−29 to 400 degrees C	400 to 600 degrees C
Body / Disc	A216 WCB(−29 to 538 degrees C)	
	A351 CF8M(−29 to 600 degrees C)	
Disc seal	316SS	
Stem	A564-630(H1150×2)	Inconel 718
Body seat	316SS + graphite laminate	

■300Lb-450 to 600mm, 150Lb-600mm

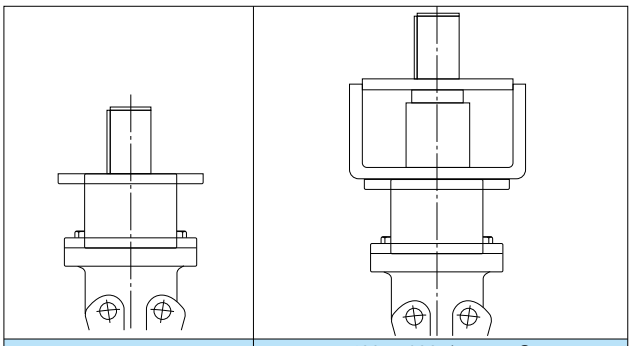

	−29 to 400 degrees C	400 to 600 degrees C
Body / Disc	A216 WCB(−29 to 538 degrees C)	
	A351 CF8M(−29 to 600 degrees C)	
Disc seal	316SS	
Stem	A564-630(H1150×2)	Inconel 718
Body seat	316SS + graphite laminate	

TT2 150Lb Cv value/pressure loss coefficient

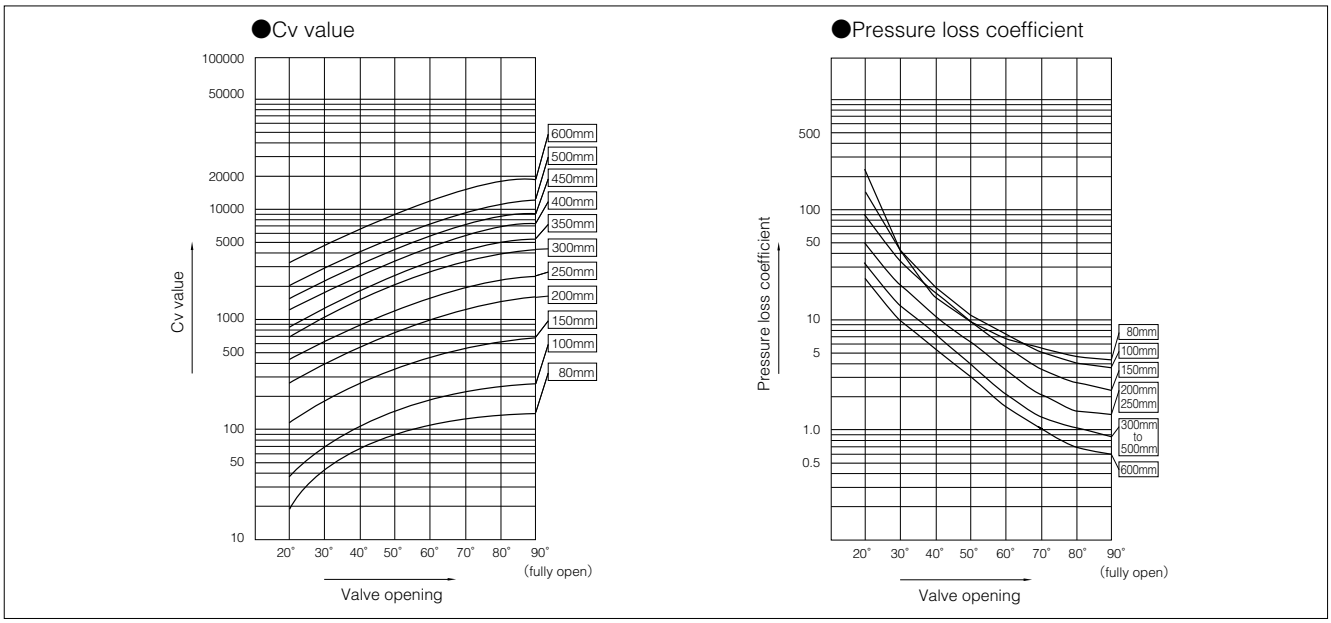

TT2 150Lb Cv value

Nominal size		Valve opening							
mm	inch	20°	30°	40°	50°	60°	70°	80°	90°
80	3	18.5	42.9	69.8	92.5	109	121	130	134
100	4	38.9	73.1	109	146	182	217	244	255
150	6	111	181	253	340	446	559	650	686
200	8	259	400	542	730	980	1260	1480	1570
250	10	411	635	859	1160	1550	1990	2340	2480
300	12	697	1080	1460	1960	2630	3370	3970	4210
350	14	861	1330	1800	2420	3250	4170	4910	5200
400	16	1200	1850	2510	3370	4530	5810	6840	7250
450	18	1500	2310	3130	4220	5670	7270	8550	9060
500	20	1930	2980	4040	5440	7310	9360	11000	11700
600	24	3110	4800	6500	8750	11800	15100	17700	18800

TT2 150Lb Pressure loss coefficent

Nominal size		Valve opening							
mm	inch	20°	30°	40°	50°	60°	70°	80°	90°
80	3	233	43.2	16.3	9.29	6.71	5.47	4.69	4.45
100	4	155	43.9	19.5	11.0	7.04	4.99	3.92	3.6
150	6	90.4	33.9	17.3	9.6	5.58	3.56	2.63	2.36
200	8	50.8	21.3	11.6	6.41	3.55	2.16	1.56	1.39
250	10	48.5	20.3	11.1	6.12	3.39	2.07	1.49	1.33
300	12	34.7	14.6	7.95	4.38	2.43	1.48	1.07	0.95
350	14	35.7	15	8.17	4.5	2.50	1.52	1.1	0.976
400	16	31.3	13.2	7.18	3.96	2.19	1.34	0.964	0.858
450	18	32.1	13.5	7.35	4.05	2.24	1.37	0.987	0.878
500	20	29.8	12.5	6.83	3.76	2.09	1.27	0.917	0.817
600	24	24.1	10.1	5.52	3.04	1.69	1.03	0.741	0.66

TT2 300Lb Cv value/pressure loss coefficient

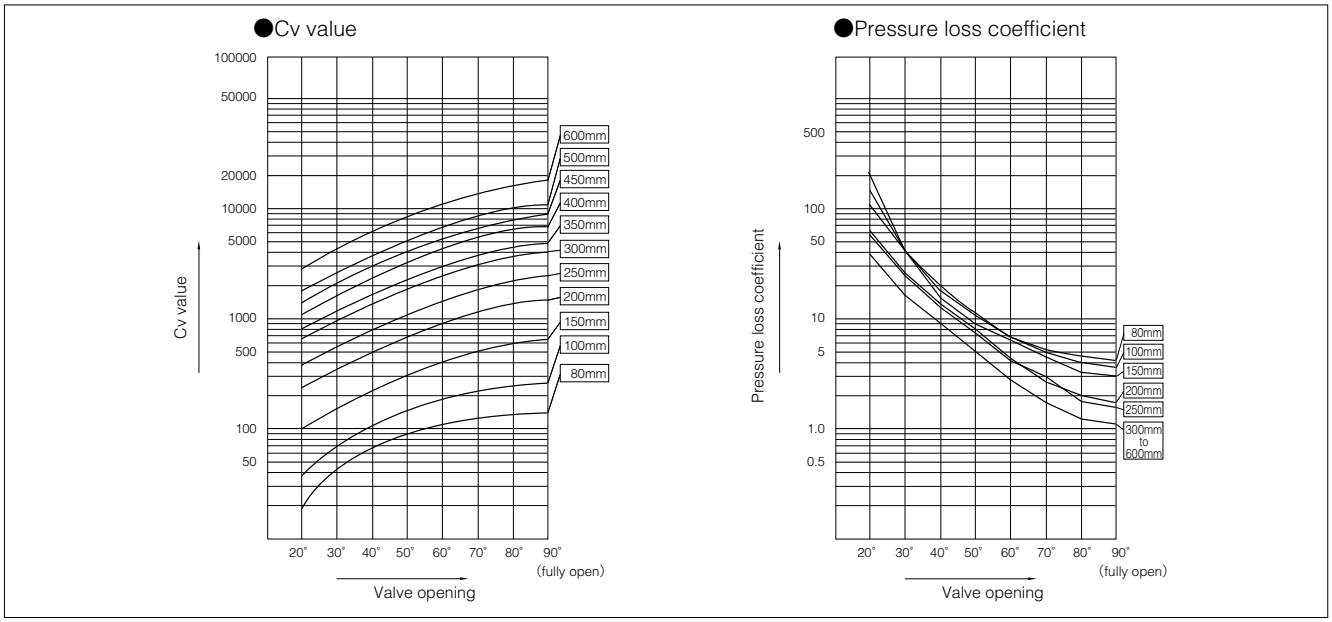

TT2 300Lb Cv value

Nominal size		Valve opening							
mm	inch	20°	30°	40°	50°	60°	70°	80°	90°
80	3	18.5	42.9	69.8	92.5	109	121	130	134
100	4	38.9	73.1	109	146	182	217	244	255
150	6	99	162	226	304	399	499	580	612
200	8	232	357	484	652	875	1120	1320	1400
250	10	367	567	767	1030	1390	1780	2090	2220
300	12	622	960	1300	1750	2350	3010	3550	3760
350	14	768	1190	1610	2160	2910	3270	4380	4640
400	16	1070	1650	2240	3010	4050	5190	6100	6470
450	18	1340	2070	2800	3770	5060	6490	7630	8090
500	20	1730	2660	3610	4860	6520	8360	9840	10400
600	24	2780	4290	5800	7820	10500	13500	15800	16800

TT2 300Lb Pressure loss coefficent

Nominal size		Valve opening							
mm	inch	20°	30°	40°	50°	60°	70°	80°	90°
80	3	233	43.2	16.3	9.29	6.71	5.47	4.69	4.45
100	4	155	43.9	19.5	11.0	7.04	4.99	3.92	3.6
150	6	113	42.5	21.7	12.0	7.00	4.46	3.3	2.97
200	8	63.7	26.7	14.6	8.04	4.46	2.71	1.96	1.74
250	10	60.8	25.5	13.9	7.67	4.25	2.59	1.87	1.66
300	12	43.5	18.3	9.97	5.49	3.05	1.85	1.34	1.19
350	14	44.7	18.8	10.2	5.65	3.13	1.91	1.38	1.22
400	16	39.3	16.5	9	4.96	2.75	1.67	1.21	1.08
450	18	40.3	16.9	9.22	5.08	2.82	1.71	1.24	1.1
500	20	37.4	15.7	8.57	4.72	2.62	1.59	1.15	1.02
600	24	30.2	12.7	6.92	3.81	2.11	1.29	0.929	0.827

TT2 KC, FL

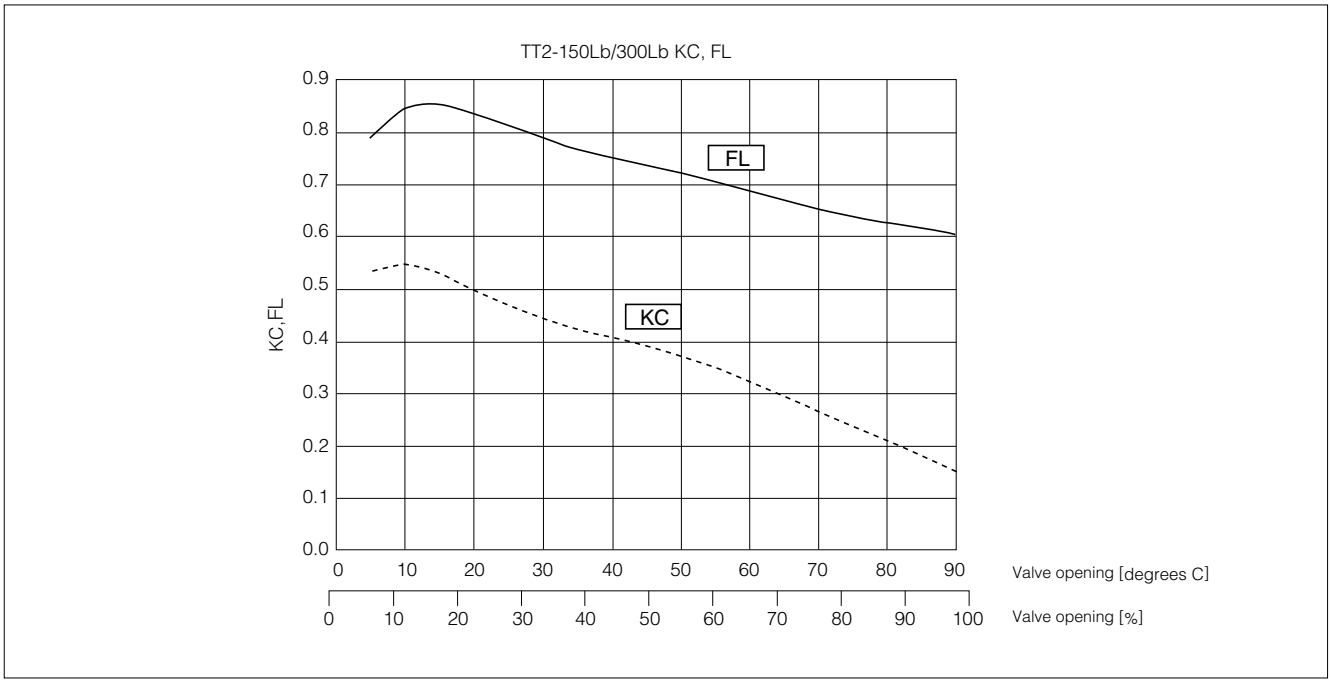

■150Lb, 300Lb

	Valve opening							
mm	20˚	30˚	40˚	50˚	60˚	70˚	80˚	90˚
KC	0.498	0.443	0.407	0.372	0.324	0.265	0.209	0.151
FL	0.838	0.788	0.752	0.724	0.691	0.654	0.626	0.604

TT2 Miniumum internal diameters of piping

Nominal size		Miniumum internal diameters of piping	
mm	inch	150Lb	300Lb
80	3	73	73
100	4	87	87
150	6	129	128
200	8	185	181
250	10	227	221
300	12	281	275
350	14	313	301
400	16	363	349
450	18	395	385
500	20	446	430
600	24	538	534

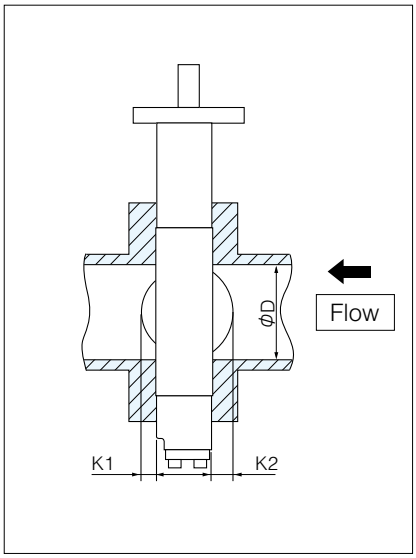

■150Lb Wafer type　High temperature specification

Nominal size		Dimension (mm)													Gear type	Approx. Mass (kg)
mm	inch	φd	φD	L	L_2	H_1	H_2	S	H_3	H_4	E	K	F	φW		
80	3	82	127	48	19	120.6	159	110	42	100	67	75	198	200	2U-3	19 (15)
100	4	108	154	54	22.5	144.6	194	132	42	100	67	75	198	200	2U-3	23 (19)
150	6	159	215	57	22	189.6	242	180	42	100	67	75	198	200	2U-3	30 (26)
200	8	202	266	64	25	199.6	248	180	42	100	67	88	198	200	2U-3	39 (35)
250	10	235	324	71	28	245.6	326	252	48	150	88	90	223	280	2U-4	67 (61)
300	12	290	373	81	32.5	281.6	376	281	63	150	91.5	127	310	450	SBWG-02	103 (87)
350	14	329	413	92	40	307.6	400	305	63	150	91.5	127	310	450	SBWG-02	119 (103)
400	16	370	470	102	39	345.6	470	355	63	180	113	156	343	550	SBWG-03	155 (135)
450	18	432	534	114	46	383.6	510	395	63	180	31.5	156	363	550	SBWG-03-1S	214 (194)
500	20	488	585	127	48	410.6	531	416	63	180	31.5	156	363	550	SBWG-03-1S	241 (221)
600	24	576	692	154	65	469.6	643	493	85	200	32.7	200	422	710	SBWG-04-1S	411 (381)

（　）Standard

■TT2-2U/2K

80 to 250mm

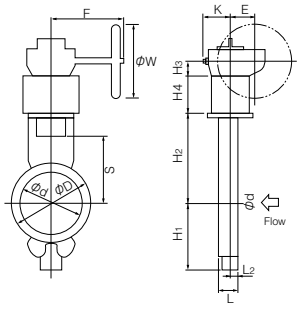

300 to 500mm

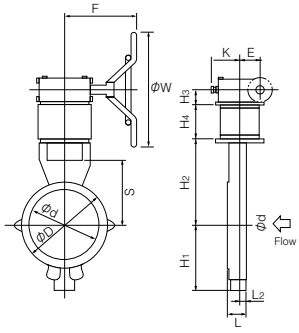

600mm

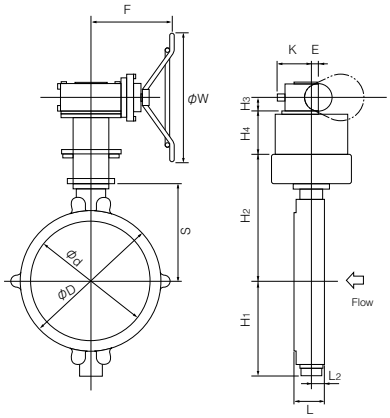

■2U/2K Installation direction

Stem side　Flow 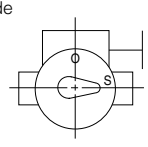 Retainer side	Stem side　Flow 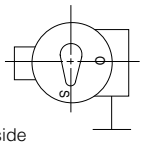 Retainer side	Stem side　Flow 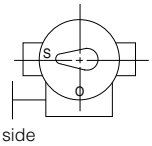 Retainer side	Stem side　Flow 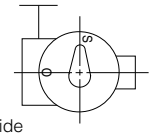 Retainer side
2UA / 2KA	2UB / 2KB	2UC / 2KC	2UD / 2KD

Worm Gear Type TT2-2U(80mm to 250m) / TT2-2K(300mm to 600mm)

■150Lb Full Lugged Type in High Temperature Specification

Nominal size		Dimension (mm)													Gear type	Approx. Weight (kg)
mm	inch	φd	φD	L	L_2	H_1	H_2	S	H_3	H_4	E	K	F	φW		
80	3	100	185	48	19	120.6	159	110	42	100	67	75	198	200	2U-3	19 (15)
100	4	117	238	54	22.5	144.6	194	132	42	100	67	75	198	200	2U-3	25 (21)
150	6	167	281	57	22	189.6	242	180	42	100	67	75	198	200	2U-3	32 (28)
200	8	218	338	64	25	199.6	248	180	42	100	67	88	198	200	2U-3	40 (36)
250	10	270	424	71	28	245.6	326	252	48	150	88	90	222.5	280	2U-4	74 (68)
300	12	320	478	81	32.5	281.6	376	281	63	150	91.5	127	310	450	SBWG-02	113 (97)
350	14	350	526	92	40	307.6	400	305	63	150	91.5	127	310	450	SBWG-02	128 (112)
400	16	410	592	102	39	345.6	470	355	63	180	113	156	343	550	SBWG-03	182 (162)
450	18	460	634	114	46	383.6	510	395	63	180	31.5	156	363	550	SBWG-03-1S	238 (218)
500	20	510	714	127	48	410.6	531	416	63	180	31.5	156	363	550	SBWG-03-1S	278 (258)
600	24	614	830	154	65	496.6	643	493	85	200	32.7	200	422	710	SBWG-04-1S	498 (468)

( ) Standard

■TT2-2U/2K

80 to 250mm

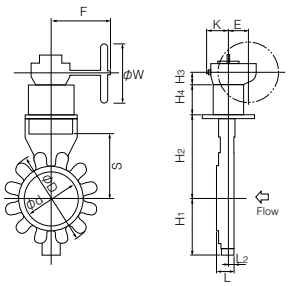

300 to 500mm

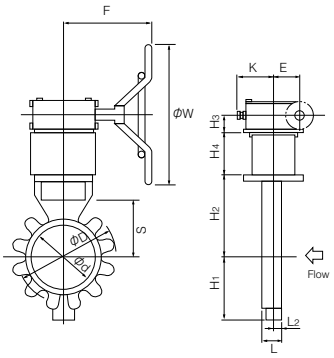

600mm

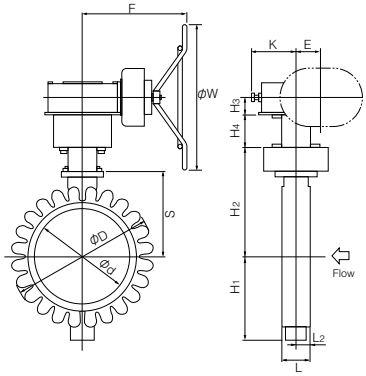

■2U/2K Installation Direction

Stem Side / Flow / Retainer Side	Stem Side / Flow / Retainer Side	Stem Side / Flow / Retainer Side	Stem Side / Flow / Retainer Side
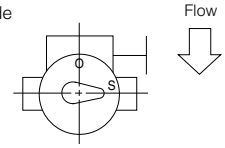	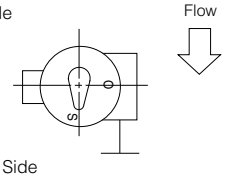	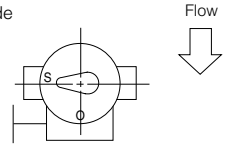	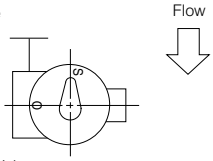
2UA / 2KA	2UB / 2KB	2UC / 2KC	2UD / 2KD

■150Lb Flanged Type in High Temperature Specification

Nominal size		Dimension (mm)													Gear type	Approx. Weight (kg)
mm	inch	φd	φD	L	L_2	H_1	H_2	S	H_3	H_4	E	K	F	φW		
80	3	90	190	114	85	120.6	159	110	42	100	67	75	198	200	2U-3	26 (22)
100	4	117	229	127	95.5	144.6	194	132	42	100	67	75	198	200	2U-3	33 (29)
150	6	167	279	140	105	189.6	242	180	42	100	67	75	198	200	2U-3	46 (42)
200	8	218	343	152	113	199.6	248	180	42	100	67	88	198	200	2U-3	60 (56)
250	10	270	406	165	122	245.6	326	252	48	150	88	90	222.5	280	2U-4	99 (93)
300	12	320	483	178	129.5	281.6	376	281	63	150	91.5	127	310	450	SBWG-02	154 (138)
350	14	350	535	190	138	307.6	400	305	63	150	91.5	127	310	450	SBWG-02	192 (176)
400	16	410	595	216	153	345.6	470	355	63	180	113	156	343	550	SBWG-03	242 (222)
450	18	458	635	222	154	383.6	510	395	63	180	31.5	156	363	550	SBWG-03-1S	290 (270)
500	20	510	700	229	150	410.6	531	416	63	180	31.5	156	363	550	SBWG-03-1S	365 (345)
600	24	614	815	267	178	469.6	643	493	85	200	32.7	200	422	710	SBWG-04-1S	537 (507)

( ) Standard

■TT2-2U/2K

80 to 250mm

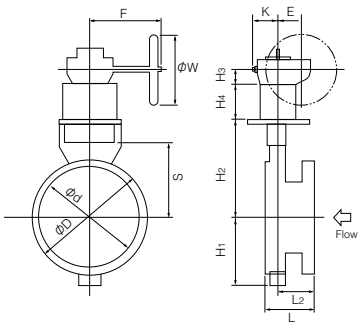

300 to 500mm

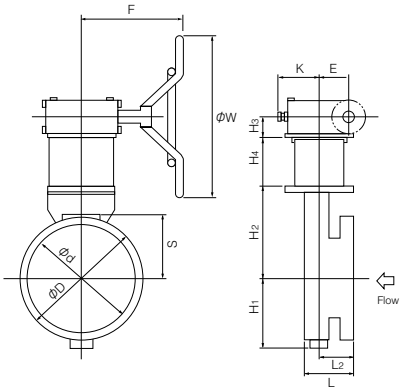

600mm

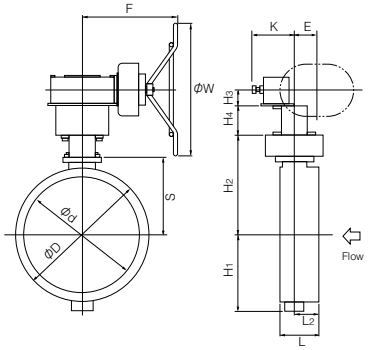

■2U/2K Installation Direction

Stem Side / Flow / Retainer Side 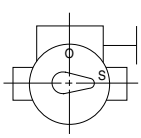	Stem Side / Flow / Retainer Side 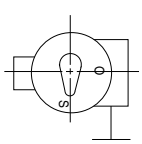	Stem Side / Flow / Retainer Side 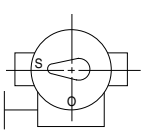	Stem Side / Flow / Retainer Side 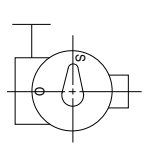
2UA / 2KA	2UB / 2KB	2UC / 2KC	2UD / 2KD

Worm Gear Type TT2-2U(80mm to 150mm) / TT2-2K(200mm to 600mm)

■300Lb Waefr Type in High Temperature Specification

Nominal size		Dimension (mm)													Gear type	Approx. Weight (kg)
mm	inch	ϕd	ϕD	L	L_2	H_1	H_2	S	H_3	H_4	E	K	F	ϕW		
80	3	82	127	48	19	120.6	159	110	42	100	67	75	198	200	2U-3	19 (15)
100	4	108	154	54	22.5	144.6	194	132	42	100	67	75	198	200	2U-3	23 (19)
150	6	153	215	59	22.5	188.6	276	212	42	100	67	88	198	200	2U-3	35 (31)
200	8	188	270	73	29	217.6	285	205	52	150	75	110	252	370	SBWG-01	61 (49)
250	10	235	324	83	35.5	259.6	355	260	63	150	91.5	127	310	450	SBWG-02	96 (80)
300	12	290	381	92	39	305.6	428	313	63	180	113	156	343	550	SBWG-03	137 (117)
350	14	329	413	117	56.5	340.6	460	345	63	180	31.5	156	363	550	SBWG-03-1S	166 (146)
400	16	370	470	133	62	373.6	518	388	85	200	32.7	180	422	710	SBWG-04-1S	268 (238)
450	18	426	534	149	70	400.6	574	424	87	200	72.7	216	476	710	SBWG-05-1S	366 (329)
500	20	476	592	159	74	441.6	602	452	87	200	184.5	218	508	710	SBWG-05-1SD	436 (399)
600	24	564	693	181	81	514.6	678	528	110	200	230	290	648	900	SBWG-06-1SD	673 (636)

( ) Standard

■TT2-2U/2K

80 to 150mm

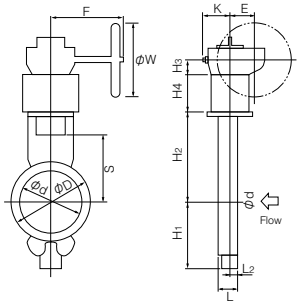

200 to 400mm

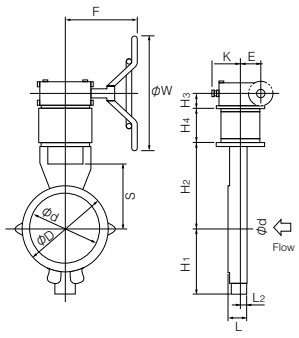

450 to 600mm

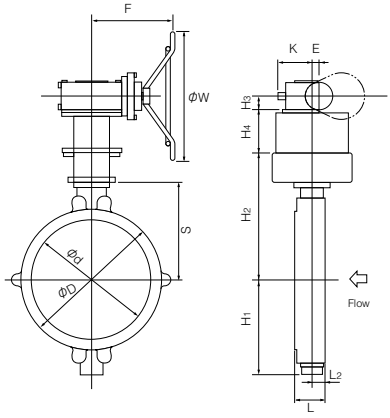

■2U/2K Installation Direction

Stem Side Flow 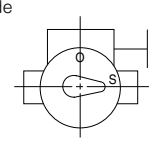 Retainer Side	Stem Side Flow 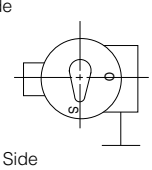 Retainer Side	Stem Side Flow 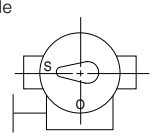 Retainer Side	Stem Side Flow 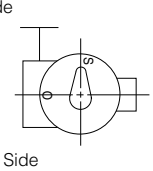 Retainer Side
2UA / 2KA	2UB / 2KB	2UC / 2KC	2UD / 2KD

■300Lb Full Lugged Type in High Temperature Specification

Nominal size		Dimension (mm)													Gear type	Approx. Weight (kg)
mm	inch	φd	φD	L	L_2	H_1	H_2	S	H_3	H_4	E	K	F	φW		
80	3	82	204	48	19	120.6	159	110	42	100	67	75	198	200	2U-3	20 (16)
100	4	177	238	54	22.5	144.6	194	132	42	100	67	75	198	200	2U-3	25 (21)
150	6	166	312	59	22.5	188.6	276	212	42	100	67	88	198	200	2U-3	36 (32)
200	8	220	374	73	29	217.6	285	205	52	150	75	110	252	370	SBWG-01	72 (56)
250	10	275	435	83	35.5	259.6	355	260	63	150	91.5	127	310	450	SBWG-02	108 (92)
300	12	320	503	92	39	305.6	428	313	63	180	113	156	343	550	SBWG-03	153 (133)
350	14	360	570	117	56.5	340.6	460	345	63	180	31.5	156	363	550	SBWG-03-1S	216 (196)
400	16	400	630	133	62	373.6	518	388	85	200	32.7	180	422	710	SBWG-04-1S	327 (297)
450	18	460	690	149	70	400.6	574	424	87	200	72.7	216	476	710	SBWG-05-1S	462 (425)
500	20	513	748	159	74	441.6	602	452	87	200	184.5	218	508	710	SBWG-05-1SD	519 (482)
600	24	613	887	181	81	514.6	678	528	110	200	230	290	648	900	SBWG-06-1SD	817 (780)

( ) Standard

■TT2-2U/2K

80 to 150mm

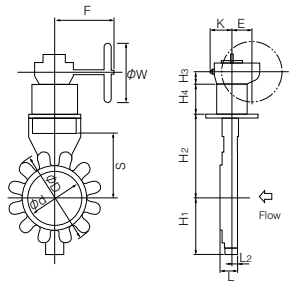

200 to 400mm

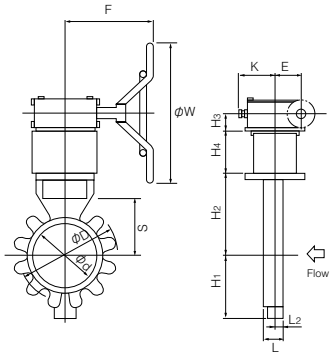

450 to 600mm

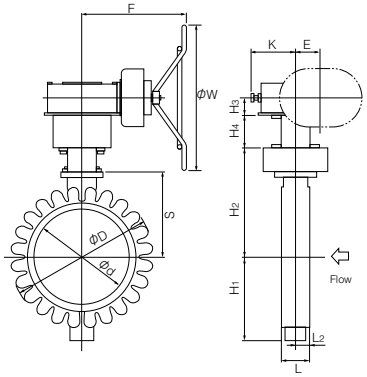

■2U/2K Installation Direction

Stem Side / Flow / Retainer Side	Stem Side / Flow / Retainer Side	Stem Side / Flow / Retainer Side	Stem Side / Flow / Retainer Side
2UA / 2KA	2UB / 2KB	2UC / 2KC	2UD / 2KD

Worm Gear Type TT2-2U(80mm to 150mm) / TT2-2K(200mm to 600mm)

■300Lb Flanged Type in High Temperature Specification

Nominal size		Dimension (mm)													Gear type	Approx. Weight (kg)
mm	inch	φd	φD	L	L_2	H_1	H_2	S	H_3	H_4	E	K	F	φW		
80	3	90	210	114	85	120.6	159	110	42	100	67	75	198	200	2U-3	29 (25)
100	4	117	254	127	95.5	144.6	194	132	42	100	67	75	198	200	2U-3	40 (36)
150	6	166	318	140	103.5	188.6	276	212	42	100	67	88	198	200	2U-3	60 (56)
200	8	208	381	152	108	217.6	285	205	52	150	75	110	252	370	SBWG-01	102 (90)
250	10	275	444	165	117.5	259.6	355	260	63	150	91.5	127	310	450	SBWG-02	151 (135)
300	12	310	520	178	125	305.6	428	313	63	180	113.0	156	343	550	SBWG-03	223 (203)
350	14	360	585	190	129.5	340.6	460	345	63	180	31.5	156	363	550	SBWG-03-1S	288 (268)
400	16	410	648	216	145	373.6	518	388	85	200	32.7	180	422	710	SBWG-04-1S	404 (374)
450	18	460	710	222	143	400.6	574	424	87	200	72.7	216	476	710	SBWG-05-1S	542 (505)
500	20	513	775	229	144	441.6	602	452	87	200	184.5	218	508	710	SBWG-05-1SD	635 (598)
600	24	613	915	267	167	514.6	678	528	110	200	230	290	648	900	SBWG-06-1SD	981 (944)

( ) Standard

■TT2-2U/2K

80 to 150mm

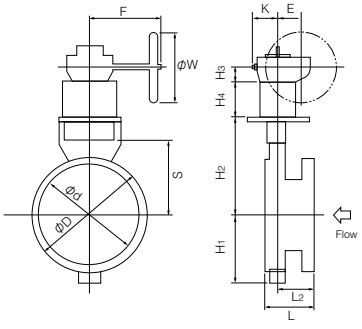

200 to 400mm

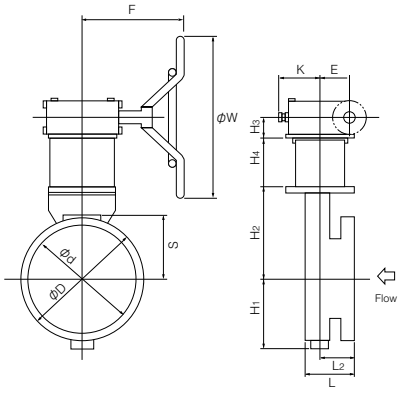

450 to 600mm

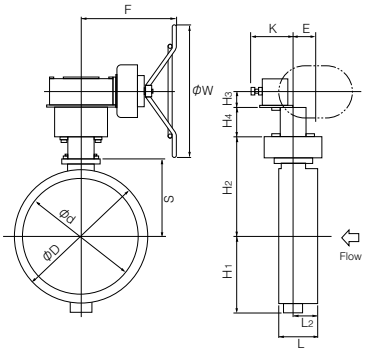

■2U/2K Installation Direction

Stem Side Flow 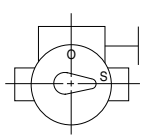 Retainer Side	Stem Side Flow 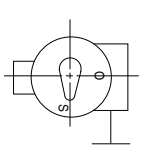 Retainer Side	Stem Side Flow 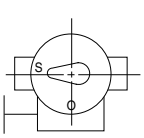 Retainer Side	Stem Side Flow 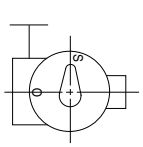 Retainer Side
2UA / 2KA	2UB / 2KB	2UC / 2KC	2UD / 2KD

TT2 Applicable flange standard

■150Lb Wafer

Nominal size		ANSI, API/JPI		JIS			BS4504, DIN, ISO			
mm	inch	300Lb	150Lb	10K	16K, 20K	30K	PN10(NP10)	PN16(NP16)	PN25(NP25)	PN40(NP40)
80	3	T (D)	—	T (D)	T (D)	T (D)	T (D)	T (D)	T (D)	T (D)
100	4	T (D)	T (D)	T (D)	T (D)	T (D)	T (D)	T (D)	T (D)	T (D)
150	6	×	T (D)	T (D)	T (D)	×	T (D)	T (D)	×	×
200	8	×	T (D)	T (D)	T (D)	×	T (D)	T (D)	×	×
250	10	×	T (D)	T (D)	T (D)	×	T (D)	T (D)	×	×
300	12	×	T (D)	T	T	×	T (D)	T (D)	×	×
350	14	×	T (D)	T (D)	T (D)	×	T (D)	T (D)	×	×
400	16	×	T (D)	T (D)	T (D)	×	T (D)	T (D)	×	×
450	18	×	T	T	T	×	T	T	×	×
500	20	×	T	T	T	×	T	T	×	×
600	24	×	T	T	T	×	T	T	×	×

■300Lb Wafer

Nominal size		ANSI, API/JPI		JIS			BS4504, DIN, ISO			
mm	inch	300Lb	150Lb	10K	16K, 20K	30K	PN10(NP10)	PN16(NP16)	PN25(NP25)	PN40(NP40)
80	3	T (D)	—	T (D)	T (D)	T (D)	T (D)	T (D)	T (D)	T (D)
100	4	T (D)	T (D)	T (D)	T (D)	T (D)	T (D)	T (D)	T (D)	T (D)
150	6	T (D)	×	×	T (D)	T (D)	×	T (D)	T (D)	T (D)
200	8	T (D)	×	×	T (D)	T (D)	×	T (D)	T (D)	T (D)
250	10	T	×	×	T (D)	T (D)	×	T (D)	T (D)	T (D)
300	12	T	×	×	T	T	×	T (D)	T	T
350	14	T	×	×	T	T	×	T	T	T
400	16	T	×	×	T	T	×	T	T	T
450	18	T	×	×	T	×	×	T	T	T
500	20	T	×	×	T	×	×	T	T	T
600	24	T	×	×	T	×	×	T	T	T

T(D) : With drill hole or tapping.
T : With flange tapping
— : No nominal diameter.
× : Not applicable

TT2 Applicable flange standard

■150Lb Lugged

Nominal size		ANSI, API/JPI		JIS			BS4504, DIN, ISO			
mm	inch	300Lb	150Lb	10K	16K, 20K	30K	PN10(NP10)	PN16(NP16)	PN25(NP25)	PN40(NP40)
80	3	×	T (D)	×	×	×	×	×	×	×
100	4	T (D)	T (D)	T (D)	T (D)	T (D)	T (D)	T (D)	T (D)	T (D)
150	6	×	T (D)	T (D)	×	×	T (D)	T (D)	×	×
200	8	×	T (D)	×	×	×	T (D)	×	×	×
250	10	×	T (D)	T (D)	T (D)	×	T (D)	T (D)	×	×
300	12	×	T (D)	×	×	×	T (D)	T (D)	×	×
350	14	×	T (D)	×	×	×	×	×	×	×
400	16	×	T (D)	T (D)	T (D)	×	T (D)	T (D)	×	×
450	18	×	T	×	×	×	×	×	×	×
500	20	×	T	T	T	×	T	T	×	×
600	24	×	T	×	×	×	T	T	×	×

■300Lb Lugged

Nominal size		ANSI, API/JPI		JIS			BS4504, DIN, ISO			
mm	inch	300Lb	150Lb	10K	16K, 20K	30K	PN10(NP10)	PN16(NP16)	PN25(NP25)	PN40(NP40)
80	3	T (D)	×	T (D)	T (D)	T (D)	T (D)	T (D)	T (D)	T (D)
100	4	T (D)	T (D)	T (D)	T (D)	T (D)	T (D)	T (D)	T (D)	T (D)
150	6	T (D)	×	×	T (D)	T (D)	×	×	×	×
200	8	T (D)	×	×	T (D)	T (D)	×	T (D)	T (D)	T (D)
250	10	T	×	×	×	×	×	×	×	×
300	12	T	×	×	T	T	×	×	T	T
350	14	T	×	×	×	×	×	×	×	×
400	16	T	×	×	×	×	×	×	×	×
450	18	T	×	×	×	×	×	×	×	×
500	20	T	×	×	×	×	×	×	×	×
600	24	T	×	×	×	×	×	×	×	×

T(D) : With drill hole or tapping.
T : With flange tapping
× : Not applicable

TT2 Applicable flange standard

■150Lb DFSP

Nominal size		ANSI, API/JPI		JIS			BS4504, DIN, ISO			
mm	inch	300Lb	150Lb	10K	16K, 20K	30K	PN10(NP10)	PN16(NP16)	PN25(NP25)	PN40(NP40)
80	3	×	D	×	×	×	×	×	×	×
100	4	×	T	×	×	×	×	×	×	×
150	6	×	T	×	×	×	×	×	×	×
200	8	×	T	×	×	×	×	×	×	×
250	10	×	T	×	×	×	×	×	×	×
300	12	×	T	×	×	×	×	×	×	×
350	14	×	T	×	×	×	×	×	×	×
400	16	×	T	×	×	×	×	×	×	×
450	18	×	T	×	×	×	×	×	×	×
500	20	×	T	×	×	×	×	×	×	×
600	24	×	T	×	×	×	×	×	×	×

■300Lb DFSP

Nominal size		ANSI, API/JPI		JIS			BS4504, DIN, ISO			
mm	inch	300Lb	150Lb	10K	16K, 20K	30K	PN10(NP10)	PN16(NP16)	PN25(NP25)	PN40(NP40)
80	3	T	×	×	×	×	×	×	×	×
100	4	T	×	×	×	×	×	×	×	×
150	6	T	×	×	×	×	×	×	×	×
200	8	T	×	×	×	×	×	×	×	×
250	10	T	×	×	×	×	×	×	×	×
300	12	T	×	×	×	×	×	×	×	×
350	14	T	×	×	×	×	×	×	×	×
400	16	T	×	×	×	×	×	×	×	×
450	18	T	×	×	×	×	×	×	×	×
500	20	T	×	×	×	×	×	×	×	×
600	24	T	×	×	×	×	×	×	×	×

D : With flange drilling
T : With flange tapping
× : Not applicable

* JIS, BS, DIN double-flange type main body not available.
Please consult with us regarding the appropriateness of JIS, BS and DIN piping in an ANSI or API/JPI main body.

TT2 Wafer Type Piping Bolts and Nuts Sizes

■Wafer Type 150Lb

Nominal size		ASME B16.5 150Lb, JPI-7S-15 150Lb			10K		
mm	inch	Setting Bolts	Long Bolts	No.of Nuts	Setting Bolts	Long Bolts	No.of Nuts
80	3	—	4-5/8-11UNC×160	8	8-M16× 75(13× 8)	4-M16×145	16
100	4	8-5/8-11UNC× 85(13× 8)	4-5/8-11UNC×160	16	8-M16× 75(13× 8)	4-M16×145	16
150	6	8-3/4-10UNC× 95(17×11)	4-3/4-10UNC×175	16	8-M20× 85(17×11)	4-M20×170	16
200	8	8-3/4-10UNC× 95(17×11)	4-3/4-10UNC×185	16	8-M20× 85(17×11)	8-M20×180	24
250	10	8-7/8- 9UNC×100(19×12)	8-7/8- 9UNC×205	24	8-M22× 95(19×12)	8-M22×190	24
300	12	8-7/8- 9UNC×100(19×12)	8-7/8- 9UNC×220	24	8-M22× 95(19×12)	12-M22×200	32
350	14	8- 1-8UNC×115(21×14)	8- 1-8UNC×245	24	8-M22× 95(19×12)	12-M22×215	32
400	16	8- 1-8UNC×125(21×14)	12- 1-8UNC×260	32	8-M24×120(21×14)	12-M24×240	32
450	18	8- 1 1/8-8UN×135(24×16)	12-1 1/8-8UN×285	32	8-M24×110(21×14)	16-M24×250	40
500	20	8- 1 1/8-8UN×135(24×16)	16-1 1/8-8UN×300	40	8-M24×110(21×14)	16-M24×260	40
600	24	8- 1 1/4-8UN×145(24×16)	16-1 1/4-8UN×345	40	8-M30×125(24×16)	20-M30×320	48

Nominal size		16K			20K		
mm	inch	Setting Bolts	Long Bolts	No.of Nuts	Setting Bolts	Long Bolts	No.of Nuts
80	3	8-M20× 85(17×11)	4-M20×160	16	8-M20× 85(17×11)	4-M20×160	16
100	4	8-M20× 85(17×11)	4-M20×170	16	8-M20× 85(17×11)	4-M20×170	16
150	6	8-M22× 95(19×12)	8-M22×175	24	8-M22× 95(19×12)	8-M22×190	24
200	8	8-M22× 95(19×12)	8-M22×190	24	8-M22×105(19×12)	8-M22×200	24
250	10	8-M24×100(21×14)	8-M24×210	24	8-M24×110(21×14)	8-M24×220	24
300	12	8-M24×100(21×14)	12-M24×220	32	8-M24×110(21×14)	12-M24×230	32
350	14	8-M30(P3)×125(24×16)	12-M30(P3)×250	32	8-M30(P3)×135(24×16)	12-M30(P3)×260	32
400	16	8-M30(P3)×135(24×16)	12-M30(P3)×275	32	8-M30(P3)×145(24×16)	12-M30(P3)×285	32
450	18	8-M30(P3)×135(24×16)	16-M30(P3)×285	40	8-M30(P3)×145(24×16)	16-M30(P3)×300	40
500	20	8-M30(P3)×135(24×16)	16-M30(P3)×300	40	8-M30(P3)×145(24×16)	16-M30(P3)×315	40
600	24	8-M36(P3)×155(30×20)	20-M36(P3)×355	48	8-M36(P3)×165(30×20)	20-M36(P3)×365	48

Note: Bolt/Nut material: SNB7/S45C
Please use a nut with a height that is 100% of the screw diameter.
The bold length calculation is based on use of a 4.5 mm thick spiral gasket.
The flange thickness calculation is based on the standard steel flange thickness.
Quantities shown are for one valve.

Examples

Setting bolts: 8 - M16 × 75 (13 × 8)
N M L b L1

Long bolts: 4 - M16 × 145
N M L

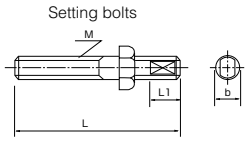

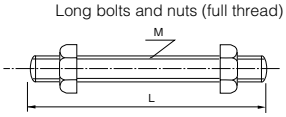

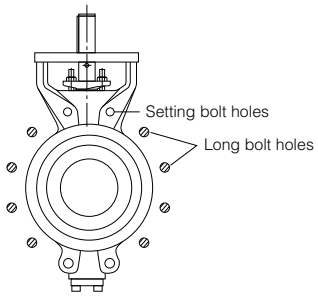

TT2 Wafer Type Piping Bolts and Nuts Sizes

■Wafer Type 150Lb

Nominal size		DIN NP10, BS4504 PN10, ISO7005-1 PN10			DIN NP16, BS4504 PN16, ISO7005-1 PN16		
mm	inch	Setting Bolts	Long Bolts	No.of Nuts	Setting Bolts	Long Bolts	No.of Nuts
80	3	8-M16× 75(13× 8)	4-M16×145	16	8-M16× 75(13× 8)	4-M16×145	16
100	4	8-M16× 75(13× 8)	4-M16×155	16	8-M16× 75(13× 8)	4-M16×155	16
150	6	8-M20× 85(17×11)	4-M20×170	16	8-M20× 85(17×11)	4-M20×170	16
200	8	8-M20× 85(17×11)	4-M20×180	16	8-M20× 85(17×11)	8-M20×180	24
250	10	8-M20× 95(17×11)	8-M20×190	24	8-M24×100(21×14)	8-M24×200	24
300	12	8-M20× 95(17×11)	8-M20×210	24	8-M24×100(21×14)	8-M24×220	24
350	14	8-M20× 95(17×11)	12-M20×210	32	8-M24×110(21×14)	12-M24×230	32
400	16	8-M24×110(21×14)	12-M24×230	32	8-M27×125(22×14)	12-M27×250	32
450	18	8-M24×110(21×14)	16-M24×250	40	8-M27×125(22×14)	16-M27×265	40
500	20	8-M24×110(21×14)	16-M24×260	40	8-M30×125(24×16)	16-M30×285	40
600	24	8-M27×125(22×14)	16-M27×310	40	8-M33×145(27×18)	16-M33×350	40

■Wafer Type 300Lb

Nominal size		ASME B16.5 300Lb, JPI-7S-15 300Lb			JIS20K		
mm	inch	Setting Bolts	Long Bolts	No.of Nuts	Setting Bolts	Long Bolts	No.of Nuts
80	3	8-3/4-10UNC×95(17×11)	4-3/4-10UNC×175	16	8-M20× 85(17×11)	4-M20×160	16
100	4	8-3/4-10UNC×95(17×11)	4-3/4-10UNC×185	16	8-M20× 85(17×11)	4-M20×170	16
150	6	8-3/4-10UNC×95(17×11)	8-3/4-10UNC×200	24	8-M22× 95(19×12)	8-M22×190	24
200	8	8-7/8-9UNC×115(19×12)	8- 7/8-9UNC×235	24	8-M22×105(19×12)	8-M22×200	24
250	10	8- 1-8UNC×125(21×14)	12- 1-8UNC×260	32	8-M24×110(21×14)	8-M24×230	24
300	12	8-1 1/8-8UN×135(24×16)	12-1 1/8-8UN×285	32	8-M24×120(21×14)	12-M24×240	32
350	14	8-1 1/8-8UN×135(24×16)	16-1 1/8-8UN×315	40	8-M30(P3)×125(24×16)	12-M30(P3)×285	32
400	16	8-1 1/4-8UN×145(24×16)	16-1 1/4-8UN×345	40	8-M30(P3)×135(24×16)	12-M30(P3)×315	32
450	18	8-1 1/4-8UN×145(24×16)	20-1 1/4-8UN×365	48	8-M30(P3)×135(24×16)	16-M30(P3)×335	40
500	20	8-1 1/4-8UN×155(24×16)	20-1 1/4-8UN×380	48	8-M30(P3)×135(24×16)	16-M30(P3)×350	40
600	24	8-1 1/2-8UN×185(30×20)	20-1 1/2-8UN×430	48	8-M36(P3)×165(30×20)	20-M36(P3)×385	48

Note: Bolt/Nut material: SNB7/S45C
Please use a nut with a height that is 100% of the screw diameter.
The bold length calculation is based on use of a 4.5 mm thick spiral gasket.
The flange thickness calculation is based on the standard steel flange thickness.
Quantities shown are for one valve.

Examples

Setting bolts: 8 - M16 × 75 (13 × 8)
N M L b L1

Long bolts: 4 - M16 × 145
N M L

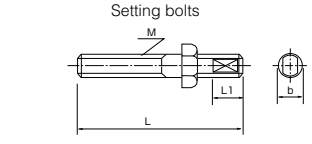

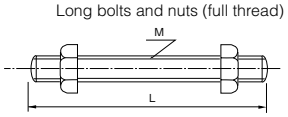

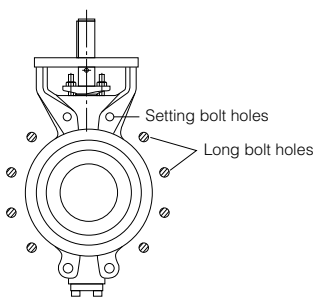

TT2 Wafer Type Piping Bolts and Nuts Sizes

■Wafer Type 300Lb

Nominal size		JIS30K			DIN NP25, BS4504 PN25, ISO7005-1 PN25		
mm	inch	Setting Bolts	Long Bolts	No.of Nuts	Setting Bolts	Long Bolts	No.of Nuts
80	3	8-M20× 85(17×11)	4-M20×170	16	8-M16× 75(13× 8)	4-M16×155	16
100	4	8-M22×105(19×12)	4-M22×190	16	8-M20× 85(17×11)	4-M20×170	16
150	6	8-M24×100(21×14)	8-M24×210	24	8-M24×100(21×14)	4-M24×190	16
200	8	8-M24×120(21×14)	8-M24×240	24	8-M24×110(21×14)	8-M24×210	24
250	10	8-M30(P3)×135(24×16)	8-M30(P3)×275	24	8-M27×115(22×14)	8-M27×230	24
300	12	8-M30(P3)×145(24×16)	12-M30(P3)×285	32	8-M27×115(22×14)	12-M27×250	32
350	14	8-M30(P3)×145(24×16)	12-M30(P3)×315	32	8-M30×125(24×16)	12-M30×285	32
400	16	8-M36(P3)×155(30×20)	12-M36(P3)×355	32	8-M33×135(27×18)	12-M33×310	32
450	18	—	—	—	8-M33×135(27×18)	16-M33×330	40
500	20	—	—	—	8-M33×135(27×18)	16-M33×350	40
600	24	—	—	—	8-M36×150(30×20)	16-M36×380	40

■Wafer Type 300Lb

Nominal size		DIN NP40, BS4504 PN40, ISO7005-1 PN40		
mm	inch	Setting Bolts	Long Bolts	No.of Nuts
80	3	8-M16× 75(13× 8)	4-M16×155	16
100	4	8-M20× 85(17×11)	4-M20×170	16
150	6	8-M24×100(21×14)	4-M24×190	16
200	8	8-M27×115(22×14)	8-M27×230	24
250	10	8-M30×125(24×16)	8-M30×250	24
300	12	8-M30×125(24×16)	12-M30×270	32
350	14	8-M33×145(27×18)	12-M33×310	32
400	16	8-M36×150(30×20)	12-M36×340	32
450	18	8-M36×150(30×20)	16-M36×355	40
500	20	8-M39×160(32×21)	16-M39×375	40
600	24	8-M45×185(36×24)	16-M45×430	40

Note: Bolt/Nut material: SNB7/S45C
Please use a nut with a height that is 100% of the screw diameter.
The bold length calculation is based on use of a 4.5 mm thick spiral gasket.
The flange thickness calculation is based on the standard steel flange thickness.
Quantities shown are for one valve.

Examples

Setting bolts: 8 - M16 × 75 (13 × 8)
N M L b L1

Long bolts: 4 - M16 × 145
N M L

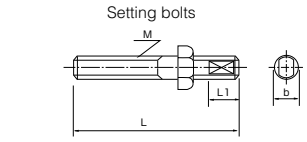

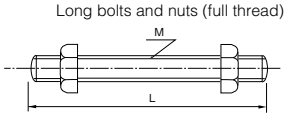

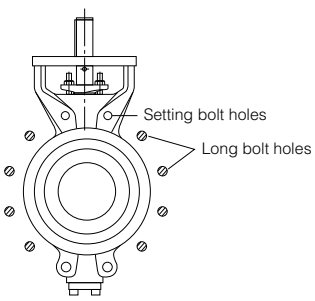

TT2 Full-lugged (fully-tapped) Piping Bolts and Nuts Sizes

■Lugged Type 150Lb

Nominal size		ASME B16.5 150Lb, JPI-7S-15 150Lb		JIS10K		JIS16K	
mm	inch	Setting Bolts	No.of Nuts	Setting Bolts	No.of Nuts	Setting Bolts	No.of Nuts
80	3	8- 5/8-11UNC×85(13× 8)	8	—	—	—	—
100	4	16-5/8-11UNC×85(13× 8)	16	16-M16× 75(13× 8)	16	16 -M20×85(17×11)	16
150	6	16-3/4-10UNC×95(17×11)	16	16-M20× 85(17×11)	16	—	—
200	8	16-3/4-10UNC×95(17×11)	16	—	—	—	—
250	10	24-7/8-9UNC×100(19×12)	24	24-M22× 95(19×12)	24	24-M24×100(21×14)	24
300	12	24-7/8-9UNC×100(19×12)	24	—	—	—	—
350	14	24- 1-8UNC×115(21×14)	24	—	—	—	—
400	16	32- 1-8UNC×115(21×14)	32	32-M24×110(21×14)	32	32-M30(P3)×125(24×16)	32
450	18	32-1 1/8-8UN×135(24×16)	32	—	—	—	—
500	20	40-1 1/8-8UN×135(24×16)	40	40-M24×110(21×14)	40	40-M30(P3)×135(24×16)	40
600	24	40-1 1/4-8UN×145(24×16)	40	—	—	—	—

Nominal size		JIS20K		DIN NP10 BS4504 PN10, ISO7005-1 PN10		DIN NP16, BS4504 PN16, ISO7005-1 PN16	
mm	inch	Setting Bolts	No.of Nuts	Setting Bolts	No.of Nuts	Setting Bolts	No.of Nuts
80	3	—	—	—	—	—	—
100	4	16-M20× 85(17×11)	16	16-M16× 75(13× 8)	16	16-M16× 75(13× 8)	16
150	6	—	—	16-M20× 85(17×11)	16	16-M20× 85(17×11)	16
200	8	—	—	16-M20× 85(17×11)	16	—	—
250	10	24-M24×110(21×14)	24	24-M20× 95(17×11)	24	24-M24×100(21×14)	24
300	12	—	—	24-M20× 95(17×11)	24	24-M24×100(21×14)	24
350	14	—	—	—	—	—	—
400	16	32-M30(P3)×135(24×16)	32	32-M24×110(21×14)	32	32-M27×115(22×14)	32
450	18	—	—	—	—	—	—
500	20	40-M30(P3)×145(24×16)	40	40-M24×110(21×14)	40	40-M30×125(24×16)	40
600	24	—	—	40-M27×115(22×14)	40	40-M33×145(27×18)	40

Note: Bolt/Nut material: SNB7/S45C
Please use a nut with a height that is 100% of the screw diameter.
The bold length calculation is based on use of a 4.5 mm thick spiral gasket.
The flange thickness calculation is based on the standard steel flange thickness.
Quantities shown are for one valve.

Examples
Setting bolts: 8 - M16 × 75 (13 × 8)
N M L b L1

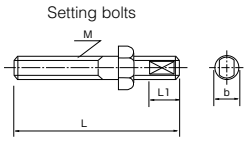

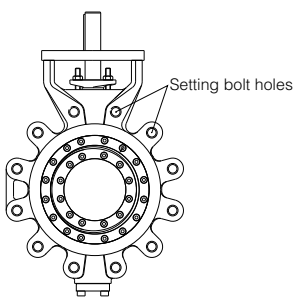

TT2 Full-lugged(fully-tapped)Piping Bolts and Nuts Sizes

■Lugged Type 300Lb

Nominal size		ASME B16.5 300Lb, JPI-7S-15 300Lb		JIS20K		JIS30K	
mm	inch	Setting Bolts	No.of Nuts	Hexagon Bolts	No.of Nuts	Hexagon Bolts	No.of Nuts
80	3	16-3/4-10UNC× 95(17×11)	16	16-M20× 75(17×11)	16	16-M20× 85(17×11)	16
100	4	16-3/4-10UNC× 95(17×11)	16	16-M20× 85(17×11)	16	16-M22× 95(19×12)	16
150	6	24-3/4-10UNC× 95(17×11)	24	24-M22× 95(19×12)	24	24-M24×110(21×14)	24
200	8	24- 7/8-9UNC×115(19×12)	24	24-M22×105(19×12)	24	24-M24×120(21×14)	24
250	10	32- 1-8UNC×125(21×14)	32	—	—	—	—
300	12	32- 1 1/8-8UN×135(24×16)	32	32-M24×120(21×14)	32	32-M30(P3)×135(24×16)	32
350	14	40- 1 1/8-8UN×135(24×16)	40	—	—	—	—
400	16	40- 1 1/4-8UN×145(24×16)	40	—	—	—	—
450	18	48- 1 1/4-8UN×145(24×16)	48	—	—	—	—
500	20	48- 1 1/4-8UN×155(24×16)	48	—	—	—	—
600	24	48- 1 1/2-8UN×185(30×20)	48	—	—	—	—

Nominal size		DIN NP25, BS4504 PN25, ISO7005-5 PN25		DIN NP40, BS4504 PN40, ISO7005-5 PN40	
mm	inch	Setting Bolts	No.of Nuts	Hexagon Bolts	No.of Nuts
80	3	16-M16× 75(13× 8)	16	16-M16× 75(13× 8)	16
100	4	16-M20× 85(17×11)	16	16-M20× 85(17×11)	16
150	6	—	—	—	—
200	8	24-M24×110(21×14)	24	24-M27×115(22×14)	24
250	10	—	—	—	—
300	12	32-M27×115(22×14)	32	32-M30×125(24×16)	32
350	14	—	—	—	—
400	16	—	—	—	—
450	18	—	—	—	—
500	20	—	—	—	—
600	24	—	—	—	—

Note: Bolt/Nut material: SNB7/S45C
Please use a nut with a height that is 100% of the screw diameter.
The bold length calculation is based on use of a 4.5 mm thick spiral gasket.
The flange thickness calculation is based on the standard steel flange thickness.
Quantities shown are for one valve.

Examples
Setting bolts: 8 - M16 × 75 (13 × 8)
N M L b L1

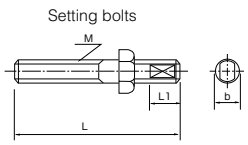

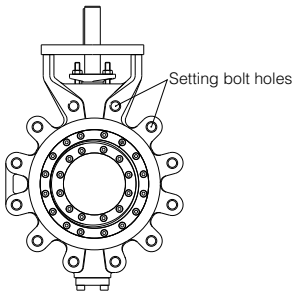

TT2 Double-flanged(short-pattern)Piping Bolts and Nuts Sizes

■150 Lb, Double-flanged, Short-pattern Type

Nominal size		ASME B16.5 150Lb, JPI-7S-15 150Lb		
mm	inch	Setting Bolts	Hexagon Bolts	No.of Nuts
80	3	—	8-5/8-11UNC× 80	8
100	4	4-5/8-11UNC×70(13× 8)	12-5/8-11UNC× 80	16
150	6	4-3/4-10UNC×85(17×11)	12-3/4-10UNC× 95	16
200	8	4-3/4-10UNC×85(17×11)	12-3/4-10UNC× 95	16
250	10	4-7/8-9UNC×100(19×12)	20-7/8-9UNC×100	24
300	12	4-7/8-9UNC×100(19×12)	20-7/8-9UNC×100	24
350	14	4- 1-8UNC×115(21×14)	20- 1-8UNC×115	24
400	16	4- 1-8UNC×115(21×14)	28- 1-8UNC×115	32
450	18	4-1 1/8-8UN×125(24×16)	28-1 1/8-8UN×130	32
500	20	4-1 1/8-8UN×125(24×16)	36-1 1/8-8UN×130	40
600	24	4-1 1/4-8UN×135(24×16)	36-1 1/4-8UN×145	40

■300Lb, Double-flanged, Short-pattern Type

Nominal size		ASME B16.5 300Lb, JPI-7S-15 300Lb		
mm	inch	Setting Bolts	Hexagon Bolts	No.of Nuts
80	3	4-3/4-10UNC×85(17×11)	12-3/4-10UNC× 95	16
100	4	4-3/4-10UNC×85(17×11)	12-3/4-10UNC× 95	16
150	6	4-3/4-10UNC×95(17×11)	20-3/4-10UNC×105	24
200	8	4-7/8-9UNC×100(19×12)	20-7/8-9UNC×120	24
250	10	4- 1-8UNC×125(21×14)	28- 1-8UNC×140	32
300	12	4-1 1/8-8UN×135(24×16)	28-1 1/8-8UN×150	32
350	14	8-1 1/8-8UN×135(24×16)	32-1 1/8-8UN×150	40
400	16	8-1 1/4-8UN×145(24×16)	32-1 1/4-8UN×165	40
450	18	8-1 1/4-8UN×145(24×16)	40-1 1/4-8UN×165	48
500	20	8-1 1/4-8UN×145(24×16)	40-1 1/4-8UN×175	48
600	24	8-1 1/2-8UN×175(30×20)	40-1 1/2-8UN×195	48

Note: Bolt/Nut material: SNB7/S45C
Please use a nut with a height that is 100% of the screw diameter.
The bold length calculation is based on use of a 4.5 mm thick spiral gasket.
The flange thickness calculation is based on the standard steel flange thickness.
Quantities shown are for one valve.

Examples

Setting bolts: 8 - M16 × 75 (13 × 8)
N M L b L1

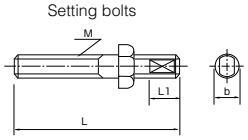

Hexagon bolts : 4 - M30 × 95
N M L

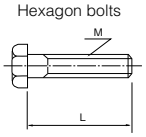

TT2 Piping gasket

* In case of spiral gasket
  For API, JPI, ANSI flange ..... Any standard gaskets with inner/outer ring can be used.
  For JIS, BS, DIN flange ..... Use special spiral gasket shown below.

●TT2 Commercially available spiral gasket conformity chart (with inner and outer ring)

Nominal size		ASME/JPI		JIS			BS4504			
mm	inch	150Lb	300Lb	10K	16/20K	30K	PN10	PN16	PN25	PN40
80	3	○	○	×	×	×	×	×	×	×
100	4	○	○	×	×	×	×	×	×	×
150	6	○	○	○	○	×	○	○	○	○
200	8	○	○	○	○	×	○	○	○	○
250	10	○	○	○	×	×	○	○	○	○
300	12	○	○	○	×	×	○	○	○	○
350	14	○	○	○	×	×	○	○	○	○
400	16	○	○	○	×	×	○	○	○	○
450	18	○	○	○	○	–	○	○	○	○
500	20	○	○	○	○	–	○	○	○	○
600	24	○	○	○	○	–	○	○	○	○

* Please use the following special spiral gaskets for the portions marked in "X" in the conformity chart above.

●TT2 Special spiral gasket flange size

Nominal size		JIS10K				JIS16/20K				JIS30K				BS4504						
																	D4			
mm	inch	D1	D2	D3	D4	D1	D2	D3	D4	D1	D2	D3	D4	D1	D2	D3	BS4504			
																	PN10	PN16	PN25	PN40
80	3	91	111	125	134	89	111	126	140	80	111	125	150	84	111	126	144	144	144	144
100	4	115	130	146	159	115	130	153	165	104	130	153	172	108	130	153	164	164	170	170
150	6	–	–	–	–	–	–	–	–	153	176	202	249	–	–	–	–	–	–	–
200	8	–	–	–	–	–	–	–	–	202	227	259	294	–	–	–	–	–	–	–
250	10	–	–	–	–	268	281	321	354	251	282	322	360	–	–	–	–	–	–	–
300	12	–	–	–	–	319	333	372	404	300	334	374	418	–	–	–	–	–	–	–
350	14	–	–	–	–	356	370	410	450	336	367	407	463	–	–	–	–	–	–	–
400	16	–	–	–	–	407	417	467	508	383	418	468	524	–	–	–	–	–	–	–

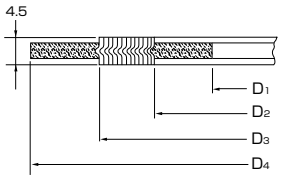

MEMO

High Performance Butterfly Valves to suit API standard 150lb/300lb Rating

334A

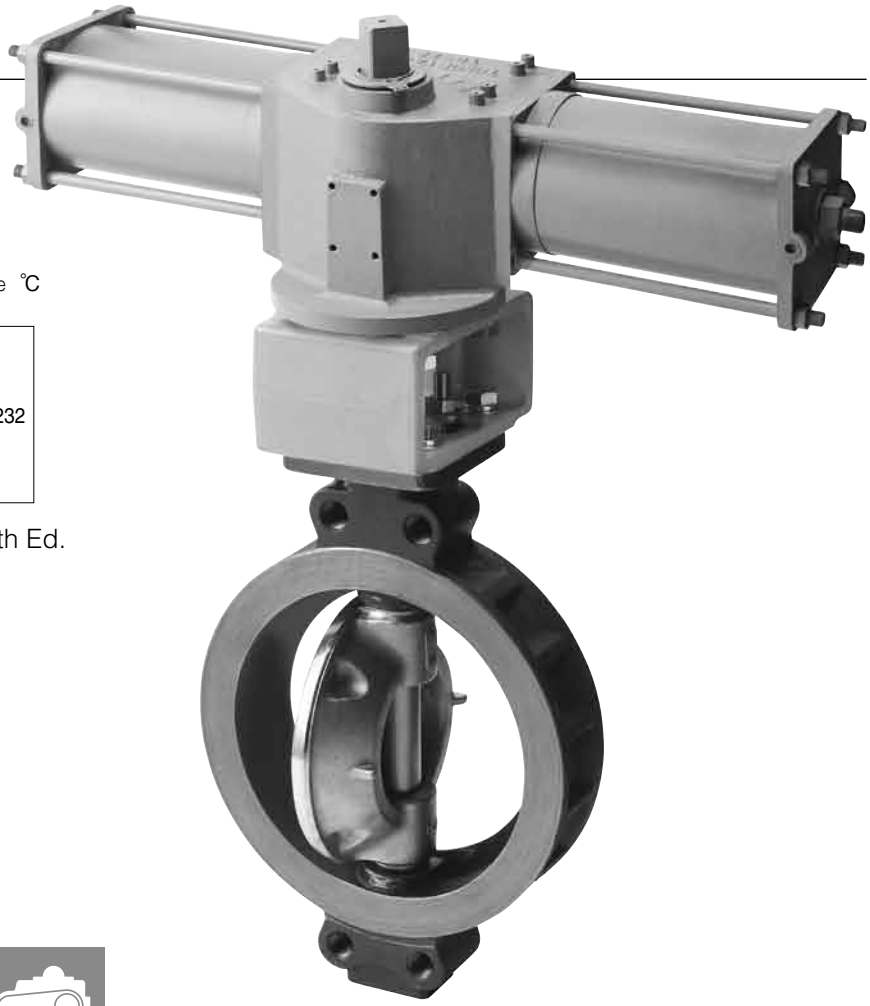

Valve nominal size

50 to 600mm

Max.working pressure MPa

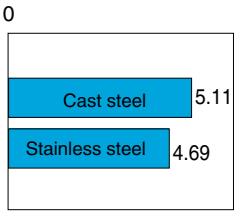

Working temperature range ℃

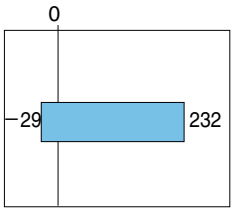

FS Fire safe certification to API607 4th Ed.

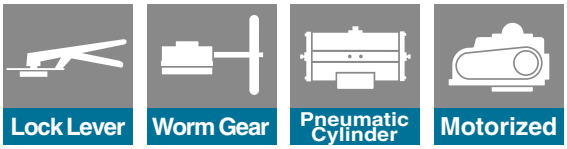

Features and Benefits

Double Offset PTFE Seated
High Performance Butterfly Valve to Suit API
Standard Fire Safe Certication As Optional

Valve nominal size: 50, 80mm to 600mm
Max. working pressure: 150Lb: 2.0MPa, 300Lb: 5.1MPa
Working temperature range: 29 degrees C to 232 degrees C

General description

Designed to suit those severe conditions such as high temperature, high pressure or high velocity which disallow the use of soft resilient seated butterfly valves. Ideal for use including chemical processes, and applications with low pressure steam and high temperature gas. The valve is available for 150 and 300 LBS.

Double offset geometry

The design exhibits tight shut off, reduced torques, chemical resistance, excellent throttling capabilities, and the ability to operate with relatively high pressure drops.

Characteristics

Fire safe certification to API607 4th Ed.

50mm : API607-5th edition Fire safe
80~600mm : API607-4th edition Fire safe ※

※ 300Lb-150mm/water body which standard is JIS16K/20K not be Applicable Fire safe. (it can not have necessary thickness.)

RPTFE as standard

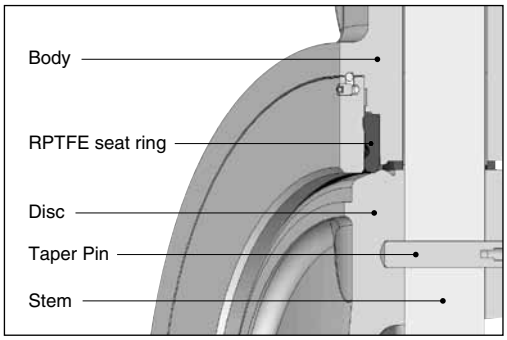

334A Fire Safe Seat (API607 4th Ed.)

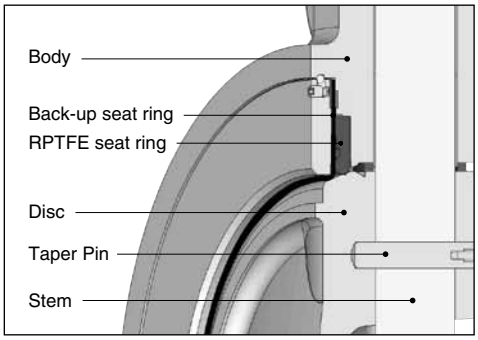



Standard Specifications

Product characteristics		Double offset soft seated butterfly valve	
Conection		Wafer type / Lugged type	
Nominal valve size ※1		50, 80, 100, 150, 200, 250, 300, 350, 400, 450, 500, 600mm	
Appricable standards	Face-to-face dimensions	80~600mm: API609 Class150/300 Category B 50mm: API609 Category A, ISO5752 Wafer butterfly valve	
	Flange standards (Wafer)※2	150Lb: ASME/JPI Class150, JIS 10K/16K/20K, BS 4504 PN10/16, DIN NP10/16 300Lb: ASME/JPI Class300, JIS 20K/30K, BS 4504 PN25/40, DIN NP25/40	
	Actuator attachment	ISO5211/1 (other than 300Lb-600mm)	
	P-T rating	ASME B16.34 / API609	
Applicable fluid		General hydrocarbon, Chemical prosess, steam, gas etc.	
Max.working pressure		150Lb: 2.0MPa (Body material : Both WCB and CF8M) 300Lb: 5.1MPa (Body material : WCB), 4.96MPa (Body material : CF8M)	
Working temperature range		-29 degree C to 232 degree C	
Pressure direction		Standard pressure direction : Pressure on retainer side	
Test Pressure	Shell test	Working pressure x 1.5 times (Hydrostatic pressure)	
	Seat leakage	0.7MPa(Air pressure) Based on API598-8thEdition Option : Working pressure x 1.1 times (Hydrostatic pressure)	
Standard Materials ※3	Body	ASTM A216 WCB	ASTM A351 CF8M
	Disc	ASTM A351 CF8M with hard chrome plating	
	Shaft	SUS420J2 ※4	630SS H1150 ※4
	Seat ring	RPTFE(Carbon graphite contained)	
	Retainer	S35C ※4	316SS ※4
	Gland Packing	Graphite	
Shaft shape for actuator conection		150Lb: 50mm to 250mm : Square / 300mm to 600mm : Key 300Lb: 50mm to 150mm : Square / 200mm to 600mm : Key	
Actuator		Lock lever, Worm gear, Pneumatic cylinder, Electric motor	
Coating		Silicon resin coating (Grey N7) for 200 degrees C and lower Heat resistant silver coating for over 200 degrees C. No coating for stainless steel.	
Usable Gasket		Sheet gasket : Marketed products available Spiral wound gasket : Marketed products (with inner & outer ring) available only for ASME/JPI Class 150 and 300 For other flange standards, special gasket for TOMOE is required.	
Option		50mm : API607-5th edition Fire safe 80~600mm : API607-4th edition Fire safe ※5	

※1 Please contact us for the requirement of 125mm.
※2 Please contact us for the detail of applicable flange connection including lugged type.
※3 When materials are selected other than standard, the working pressure might be limited. Please consult with our sales for the details.
※4 In case of Body material is WCB : Shaft /SUS420J2, Retainer/S35C In case of Body materials is CF8M : Shaft/630SS+H1150, Retainer/316SS
※5 300Lb-150mm/wafer body with flange standard JIS16K/20K is not applicable to fire-safe duties.

※It is possible that seat leakage occur when fluid (e.g. powder and/or liquid) is solidified by working temperature and other cause. Consult us.
Please note that use with vertical line such as bottom area of discharge spout of hopper, and tank.

Model type

Type	Wafer type		Lugged type	
	150Lb	300Lb	150Lb	300Lb
Standard	324A	334A	324Q	334Q
Fire safe	344A	354A	344Q	354Q

334A Expanded view of bare shaft

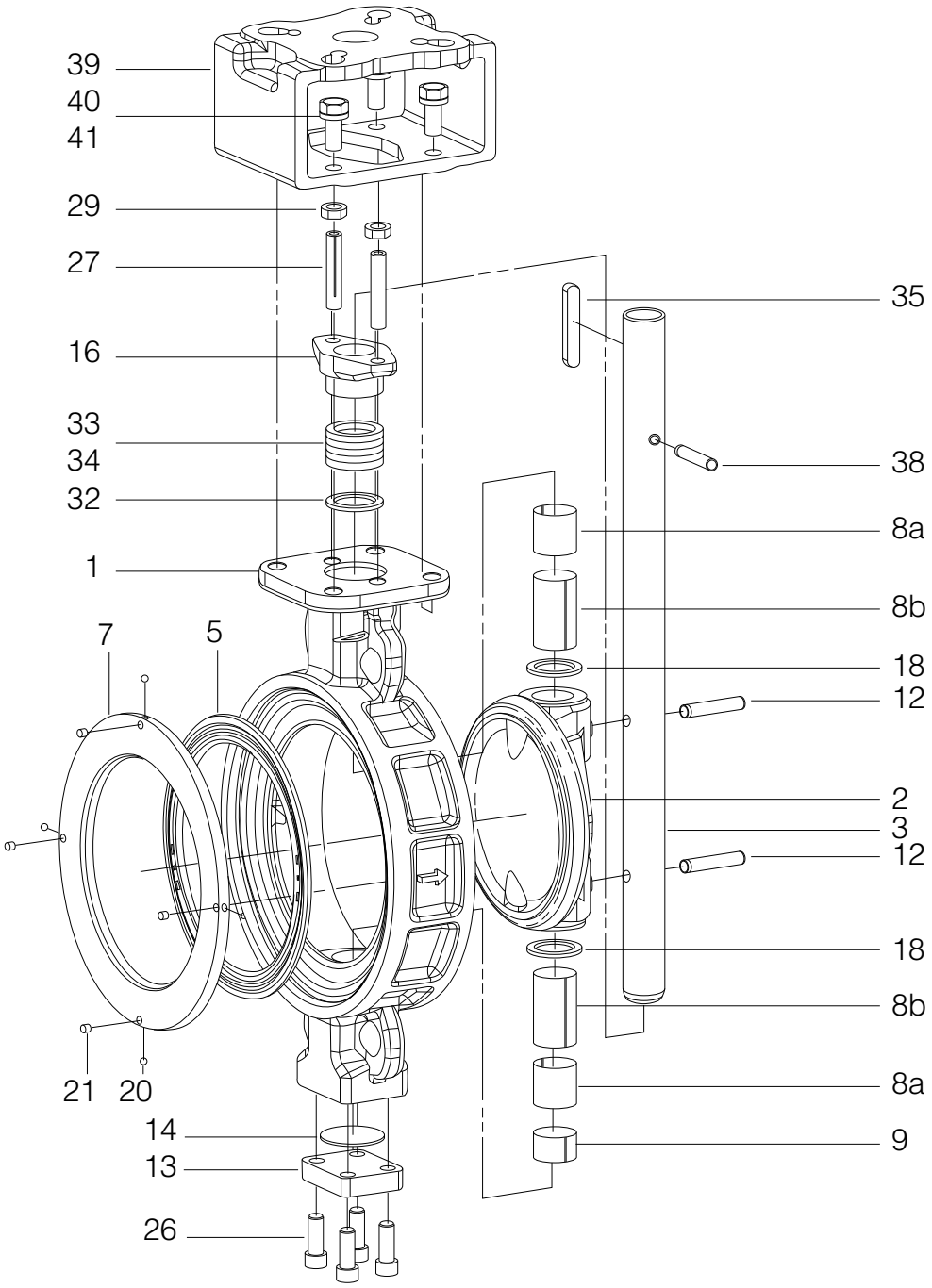

■334A Bare shaft parts list-150Lb

No.	Description	Q'ty	Remarks
1	Body	1	
2	Disc	1	
3	Stem	1	
5	Seat ring	1	
7	Seat ring retainer	1	
8a	Bearing a	0	600mm
		1	300mm
		2	80mm to 150mm, 500mm
		3	200mm
		4	250mm, 350mm
		6	400mm, 450mm
8b	Bearing b	0	400mm, 450mm
		1	80mm, 100mm, 200mm, 250mm, 350mm
		2	150mm, 500mm
		3	300mm
		4	600mm
9	Bearing spacer	1	
12	Taper pin	2	80mm to 300mm
		3	350mm to 600mm
13	Bottom cover	1	
14	Bottom gasket	1	
16	Gland plate spigot	1	
18	Space ring	2	
20	Ball	2	80mm, 100mm
		4	150mm to 600mm
21	Set screw	2	80mm, 100mm
		4	150mm to 600mm
26	Hexagon hole bolt	4	
27	Gland bolt	2	
29	Hexagon nut	2	
32	Packing retainer	1	
33	Gland packing a	3	
34	Gland packing b	2	
35	Key	0	80mm to 150mm
		1	200mm to 600mm
38	Spring pin	1	
39	Column	1	
40	Hexagon bolt	4	
41	Spring washer	4	

■334A Bare shaft parts list-300Lb

No.	Description	Q'ty	Remarks
1	Body	1	
2	Disc	1	
3	Stem	1	
5	Seat ring	1	
7	Seat ring retainer	1	
8a	Bearing a	2	
8b	Bearing b	1	80mm to 150mm
		2	200mm to 600mm
9	Bearing spacer	1	
12	Taper pin	2	80mm to 200mm
		3	250mm to 600mm
13	Bottom cover	1	
14	Bottom gasket	1	
16	Gland plate spigot	1	
18	Space ring	2	
20	Ball	2	80mm, 100mm
		4	150mm to 600mm
21	Set screw	2	80mm, 100mm
		4	150mm to 600mm
26	Hexagon hole bolt	4	
27	Gland bolt	2	
29	Hexagon nut	2	
32	Packing retainer	1	
33	Gland packing a	3	
34	Gland packing b	2	
35	Key	0	80mm to 150mm
		1	200mm to 600mm
38	Spring pin	1	
39	Column	1	
40	Hexagon bolt	4	
41	Spring washer	4	

334A Actuator Selection Chart

■334A-150Lb

Type	Model	Category	Size (mm / inch)											
			50	80	100	150	200	250	300	350	400	450	500	600
			2	3	4	6	8	10	12	14	16	18	20	24
Lock lever	1T	T10	1T-1	1T-2										
		T20												
Worm gear	2U,2K	T10	2U-1	2U-2	2U-3		2U-4			2K (SBWG-01)	2K (SBWG-02)	2K (SBWG-03)		2K (SBWG-04-1S)
		T20												
Double-action pneumatic	7E,3A	T10	T85	T200	T380		T750			TGA-125		TGA-140	TGA-160	TGA-180
		T20									TGA-140	TGA-160	TGA-180	TGA-200
Single-action pneumatic	7G,7F 3U,3K	T10	T200S	T380S	T750S		TG-12S			TG-14S		TG-20S		
		T20												
Single phase motor	4I	T10	4I-0	4I-1	4I-2	4I-2.5		4I-3			4I-4			
		T20												

334A Pressure -Tempreture

334A-150Lb Actuator Division
(Body Material : WCB)

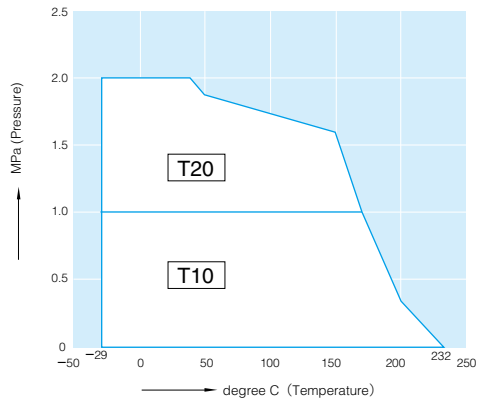

334A-150Lb Actuator Division
(Body Material : CF8M)

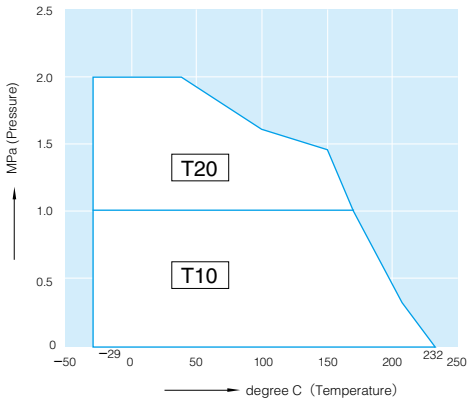

T10 : 1MPa or less
T20 : Over 1MPa to 2MPa

334A Actuator Selection Chart

■334A-300Lb

Type	Model	Category	Size (mm / inch)											
			50	80	100	150	200	250	300	350	400	450	500	600
			2	3	4	6	8	10	12	14	16	18	20	24
Lock lever	1T	A	1T-1	1T-2										
		B												
		C												
		D												
Worm gear	2U,2K	A	2U-1	2U-2		2U-3	2U-4	2K (SBWG01)	2K (SBWG02)	2K (SBWG03)	2K (SBWG03-1S)	2K (SBWG04-1S)		2K (SBWG05-1S)
		B												
		C												
		D												
Double-action pneumatic	7E,3A	A	T85	T200		T380	T750	TGA-125	TGA-125	TGA-140	TGA-160	TGA-180	TGA-180	TGA-200
		B								TGA-160	TGA-180	TGA-200	TGA-200	TGA-220
		C								TGA-160	TGA-180	TGA-200	TGA-220	TGA-250
		D			T380	T750	TGA-125	TGA-140	TGA-160	TGA-180	TGA-200	TGA-220		
Single-action pneumatic	7G,7F 3U,3K	A	T200S	T380S	T750S	TG-12S	TG-14S	TG-20S						
		B												
		C												
		D												
Single phase motor	4I	A	4I-0	4I-1	4I-2	4I-2.5	4I-3	4I-4						
		B												
		C												
		D												

334A Pressure Rating

334A-300Lb Actuator Division
(Body Material : WCB)

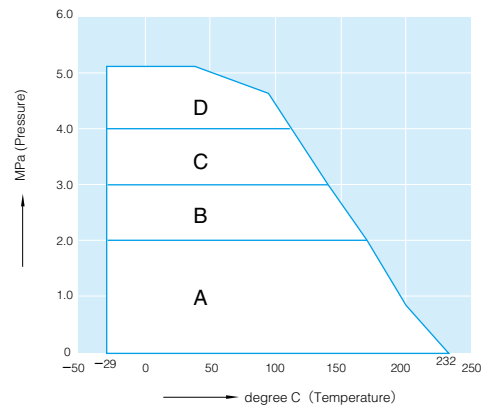

334A-300Lb Actuator Division
(Body Material : CF8M)

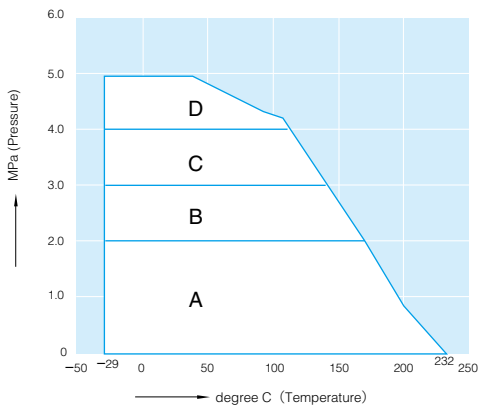

A: 2 MPa or less
B: Over 2 MPa to 3 MPa
C: Over 3 MPa to 4 MPa
D: Over 4 MPa to maximum allowable pressure

334A Bare Shaft Dimension

■150Lb

Nominal size		Dimension (mm)															Approx. Weight (kg)
mm	inch	φd	φD	L	L_2	H_1	H_2	a_1	a_2	□S_1	φd_2	b	t_2	H_4	t	Top Flange type	
50	2	60	97	43	17.5	102.5	102.5	22.5	11.5	12	14	—	—	70	8	F07, F10	5.7
80	3	86.5	128	48	20	118	127	26.5	16.5	14	18	—	—	70	8	F07, F10	8
100	4	112	158	54	22	147	149	26.5	20	16	20	—	—	70	8	F07, F10	10.7
150	6	160	216	57	23	186	190	26.5	20	18	22	—	—	98	12	F10, F12, F14	18.9
200	8	210	270	64	26.5	201	209.2	37	30	22	26	—	—	98	12	F10, F12, F14	25.6
250	10	260	324	71	29	254	253	37	34	24	30	—	—	98	12	F10, F12, F14	39
300	12	310	382	81	36	283	280.5	72	67	—	32	10	3	98	12	F10, F12, F14	49
350	14	347	415	92	37	313	301	72	67	—	37	10	3	125	16	F14, F16	73
400	16	402	473	102	40	348	350	86	81	—	42	12	3	125	16	F14, F16	101
450	18	446	534	114	46	394	383.6	86	81	—	45	14	3.5	125	16	F14, F16	145
500	20	497	586	127	55	421	409.2	86	81	—	52	16	4	125	16	F14, F16	179
600	24	600	694	154	70	481	473	116	111	—	60	18	4	150	20	Special A, Special B	304

■150Lb 80mm to 600mm

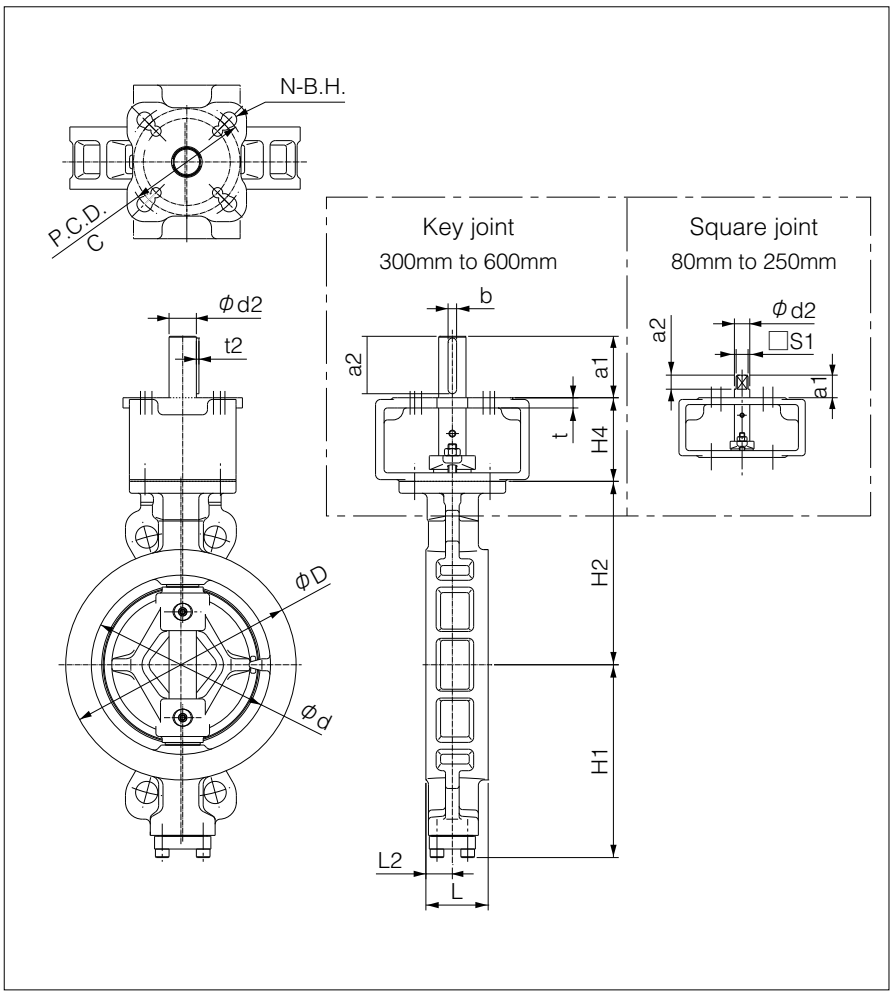

■Top Flange Type Dimension List

Flange type	P.C.D. C	N	B.H.
F07	70	4	10
F10	102	4	12
F12	125	4	14
F14	140	4	18
F16	165	4	22
F25	254	8	18
Special A	220	4	22
Special B	254	8	22

334A Bare Shaft Dimension

■300Lb

Nominal size		Dimension (mm)															Approx. Weight (kg)
mm	inch	φd	φD	L	L_2	H_1	H_2	a_1	a_2	□S_1	φd_2	b	t_2	H_4	t	Top Flange type	
50	2	60	97	43	17.5	102.5	102.5	22.5	11.5	12	14	—	—	70	8	F07, F10	5.7
80	3	86.5	128	48	20	118	127	26.5	16.5	14	18	—	—	70	8	F07, F10	8
100	4	112	158	54	22	147	149	26.5	20	16	20	—	—	70	8	F07, F10	10.7
150	6	160	216	59	24	192	187	37	30	22	26	—	—	98	12	F10, F12, F14	21.4
200	8	210	270	73	31	226	215	72	67	—	32	10	3	98	12	F10, F12, F14	32
250	10	260	326	83	36	260	253	72	67	—	37	10	3	125	16	F14, F16	60
300	12	310	385	92	42	292	294.5	86	81	—	42	12	3	125	16	F14, F16	83
350	14	347	420	117	52	338	326	86	81	—	45	14	3.5	125	16	F14, F16	113
400	16	402	476	133	61.5	376	364	86	81	—	52	16	4	125	16	F14, F16	157
450	18	446	536	149	70	402	394.5	116	111	—	60	18	4	150	20	F25, Special A	231
500	20	497	590	159	75	431	426.5	116	111	—	65	18	4	150	20	F25, Special A	283
600	24	600	701	181	84	504	496	136	131	—	70	20	4.5	150	20	Special A, Special B	433

■300Lb 80mm to 600mm

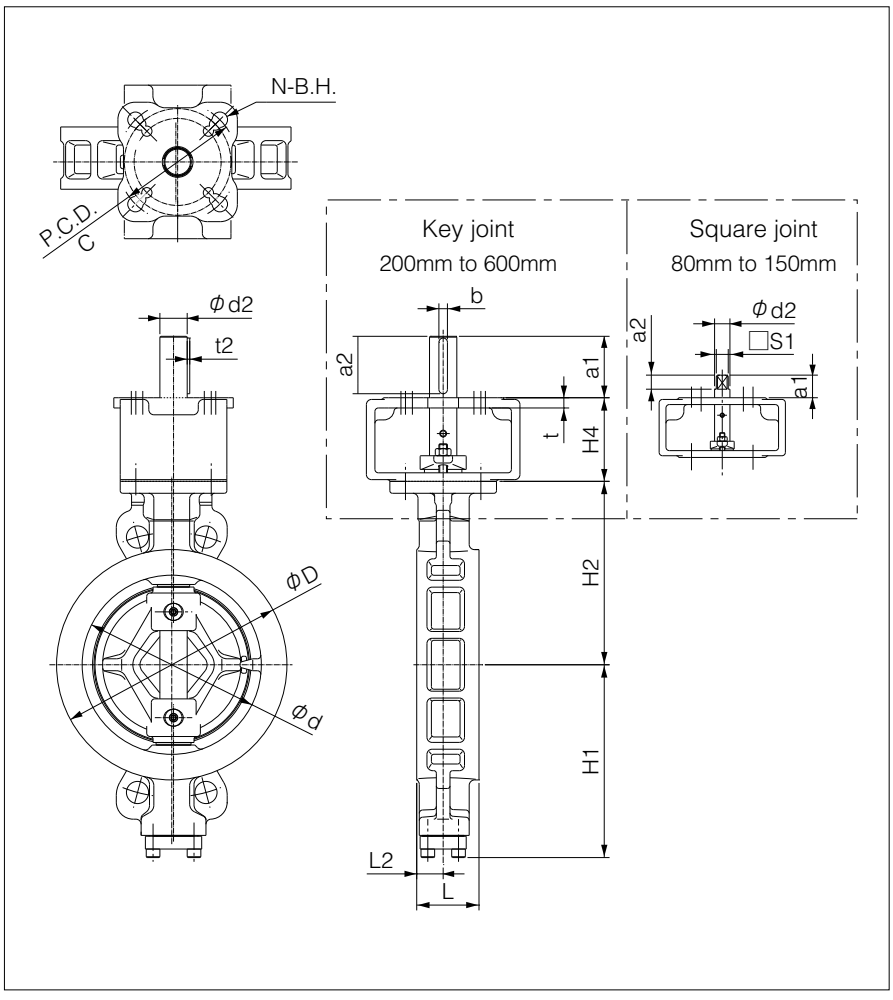

■Top Flange Type Dimension List

Flange type	P.C.D. C	N	B.H.
F07	70	4	10
F10	102	4	12
F12	125	4	14
F14	140	4	18
F16	165	4	22
F25	254	8	18
Special A	220	4	22
Special B	254	8	22

Worm Gear Type-150Lb 334A-2U(50 to 300mm) / 334A-2K(350 to 600mm)

■150Lb

Nominal size		Dimension (mm)												Gear type	Approx. Weight (kg)
mm	inch	φd	φD	L	L_2	H_1	H_2	H_3	H_4	E	K	F	φW		
50	2	60	97	43	17.5	102.5	102.5	29.5	70	36	74	160	100	2U-1	8
80	3	86.5	128	48	20	118	127	34.5	70	44	74	173.5	160	2U-2	12.5
100	4	112	158	54	22	147	149	34.5	70	44	74	173.5	160	2U-2	15
150	6	160	216	57	23	186	190	41.5	98	67	90	198	200	2U-3	27
200	8	210	270	64	26.5	201	209.2	41.5	98	67	90	198	200	2U-3	34
250	10	260	324	71	29	254	253	48	98	87.5	90	222.5	280	2U-4	55
300	12	310	382	81	36	283	280.5	48	98	87.5	90	222.5	280	2U-4	65
350	14	347	415	92	37	313	301	52	125	75	113	252	370	SBWG-01	79
400	16	402	473	102	40	348	350	63	125	91.5	113	310	450	SBWG-02	123
450	18	446	534	114	46	394	384	63	125	113	113	343	550	SBWG-03	173
500	20	497	586	127	55	421	409	63	125	113	113	343	550	SBWG-03	207
600	24	600	694	154	70	481	473	85	150	32.7	200	422	710	SBWG-04-1S	363

■334A-2U/2K

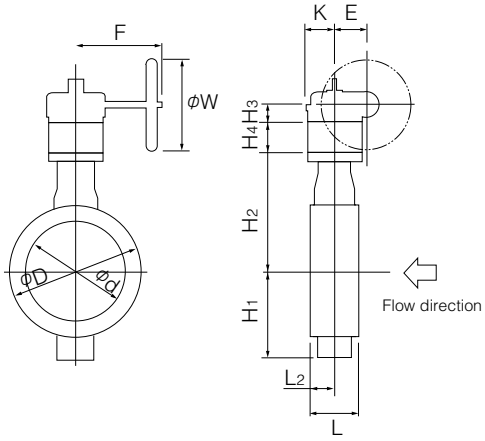

■2U/2K Installation Direction

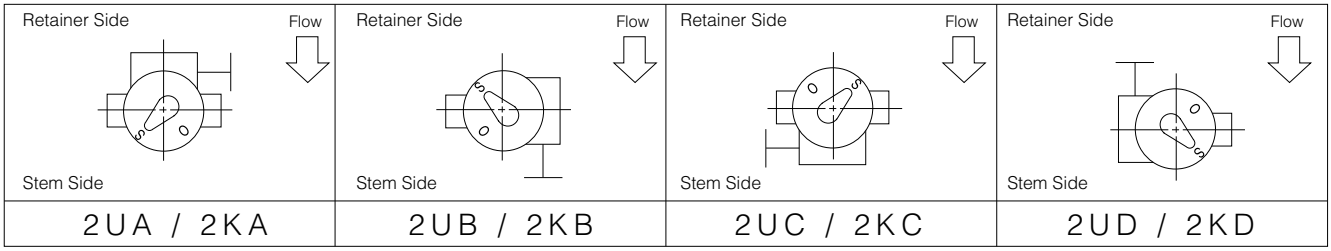

■300Lb

Nominal size		Dimension (mm)												Gear type	Approx. Weight (kg)
mm	inch	φd	φD	L	L_2	H_1	H_2	H_3	H_4	E	K	F	φW		
50	2	60	97	43	17.5	102.5	102.5	29.5	70	36	74	160	100	2U-1	8.0
80	3	86.5	128	48	20	118	127	34.5	70	44	74	173.5	160	2U-2	12.5
100	4	112	158	54	22	147	149	34.5	70	44	74	173.5	160	2U-2	15
150	6	160	216	59	24	192	187	41.5	98	67	90	198	200	2U-3	29
200	8	210	270	73	31	226	215	48	98	87.5	90	222.5	280	2U-4	48
250	10	260	326	83	36	260	253	52	125	75	113	360	400	SBWG-01	72
300	12	310	385	92	42	292	294.5	63	125	91.5	113	418.5	500	SBWG-02	104
350	14	347	420	117	52	338	326	63	125	113	113	452	560	SBWG-03	141
400	16	402	476	133	61.5	376	364	63	125	31.5	113	481	560	SBWG-03-1S	190
450	18	446	536	149	70	402	394.5	85	150	32.7	200	550	630	SBWG-04-1S	306
500	20	497	590	159	75	431	426.5	85	150	32.7	200	550	630	SBWG-04-1S	358
600	24	600	701	181	84	504	496	87	150	72.7	200	599.5	710	SBWG-05-1S	531

■334A-2U/2K

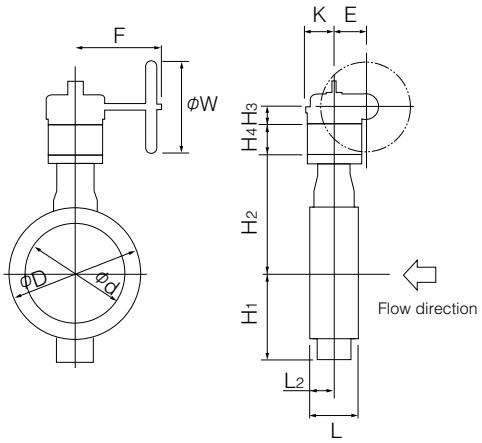

■2U/2K Installation Direction

Retainer Side / Flow / Stem Side	Retainer Side / Flow / Stem Side	Retainer Side / Flow / Stem Side	Retainer Side / Flow / Stem Side
2UA/2KA	2UB/2KB	2UC/2KC	2UD/2KD

334A-150Lb Cv value and pressure loss coefficient

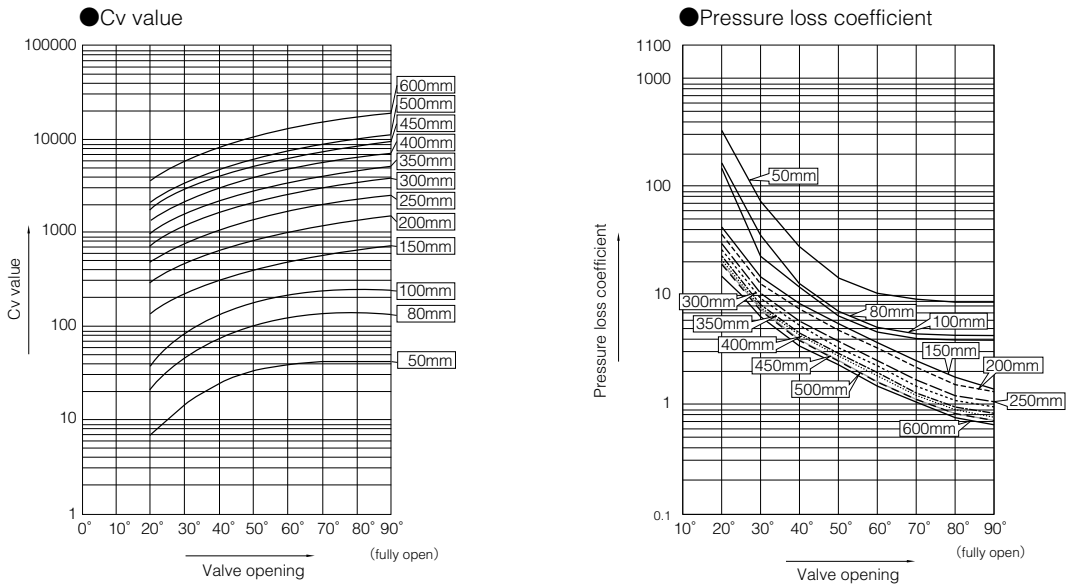

334A -150Lb Cv value

Nominal size		Valve opening							
mm	inch	20°	30°	40°	50°	60°	70°	80°	90°
50	2	7	15	24	33	39	42	43	43
80	3	22	47	77	104	124	134	135	136
100	4	38	83	135	184	219	236	238	240
150	6	140	231	310	385	471	573	677	729
200	8	295	488	655	814	995	1211	1430	1540
250	10	479	792	1063	1321	1615	1966	2321	2500
300	12	747	1236	1659	2061	2519	3066	3621	3900
350	14	1002	1657	2225	2765	3378	4112	4856	5230
400	16	1379	2281	3063	3806	4651	5661	6685	7200
450	18	1835	3035	4075	5064	6188	7533	8895	9580
500	20	2146	3549	4764	5920	7235	8806	10399	11200
600	24	3583	5925	7955	9885	12080	14703	17362	18700

334A -150Lb Pressure loss coefficent

Nominal size		Valve opening							
mm	inch	20°	30°	40°	50°	60°	70°	80°	90°
50	2	33.6	73.3	28.6	15.1	10.8	9.4	8.9	8.9
80	3	171.9	36.3	13.5	7.3	5.2	4.4	4.4	4.3
100	4	156.9	33.2	12.3	6.7	4.7	4.1	4.0	3.9
150	6	42.5	15.6	8.6	5.6	3.7	2.5	1.8	1.6
200	8	37.5	13.7	7.6	4.9	3.3	2.2	1.6	1.4
250	10	29.3	10.7	5.9	3.8	2.6	1.7	1.3	1.1
300	12	25.8	9.4	5.2	3.4	2.3	1.5	1.1	1.0
350	14	22.2	8.1	4.5	2.9	2.0	1.3	1.0	0.8
400	16	21.2	7.8	4.3	2.8	1.9	1.3	0.9	0.8
450	18	19.3	7.1	3.9	2.5	1.7	1.1	0.8	0.7
500	20	19.2	7.0	3.9	2.5	2.1	1.1	0.8	0.7
600	24	18.0	6.6	3.6	2.4	1.6	1.1	0.8	0.7

334A-300Lb Cv value and pressure loss coefficient

●Cv value

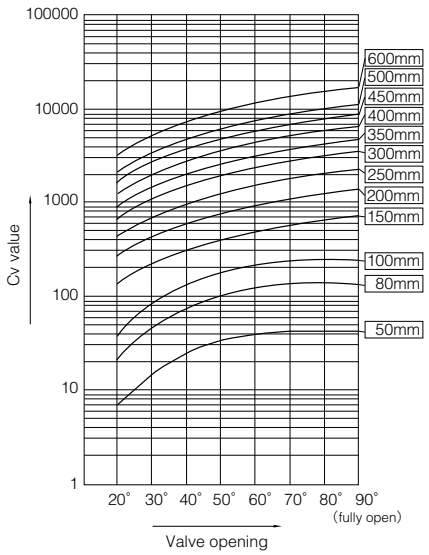

●Pressure loss coefficient

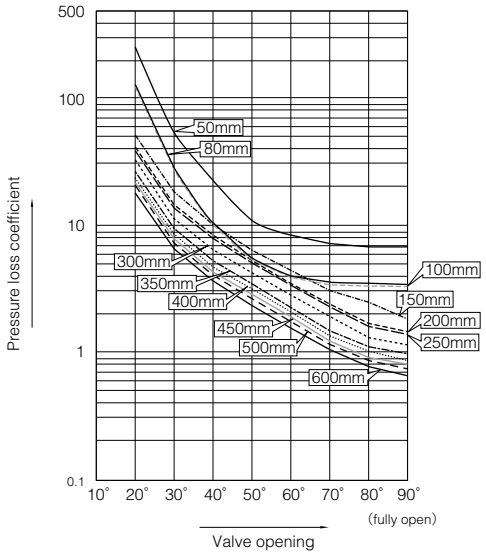

334A -300Lb Cv value

Nominal size		Valve opening							
mm	inch	20°	30°	40°	50°	60°	70°	80°	90°
50	2	7	15	24	33	39	42	43	43
80	3	22	47	77	104	124	134	135	136
100	4	38	83	135	184	219	236	238	240
150	6	139	230	309	384	470	572	675	727
200	8	270	446	599	744	909	1106	1306	1407
250	10	436	720	967	1202	1469	1787	2111	2273
300	12	677	1120	1503	1868	2283	2778	3281	3533
350	14	909	1503	2018	2508	3065	3730	4405	4744
400	16	1249	2065	2773	3445	4210	5125	6052	6518
450	18	1664	2751	3694	4590	5609	6828	8062	8683
500	20	2122	3510	4712	5855	7155	8710	10285	11077
600	24	3245	5366	7205	8953	10941	13317	15725	16937

334A -300Lb Pressure loss coefficent

Nominal size		Valve opening							
mm	inch	20°	30°	40°	50°	60°	70°	80°	90°
50	2	262.0	57.1	22.3	11.8	8.4	7.3	6.9	6.9
80	3	136.3	28.8	10.7	5.8	4.1	3.5	3.5	3.4
100	4	132.5	28.0	10.4	5.6	4.0	3.4	3.4	3.3
150	6	50.6	18.5	10.3	6.7	4.5	3.0	2.2	1.9
200	8	41.4	15.1	8.4	5.4	3.6	2.5	1.8	1.5
250	10	39.2	14.3	8.0	5.2	3.5	2.3	1.7	1.4
300	12	32.5	11.9	6.6	4.3	2.9	1.9	1.4	1.2
350	14	26.3	9.6	5.3	3.5	2.3	1.6	1.1	1.0
400	16	23.9	8.8	4.9	3.1	2.1	1.4	1.0	0.9
450	18	21.7	7.9	4.4	2.9	1.9	1.3	0.9	0.8
500	20	20.5	7.5	4.2	2.7	1.8	1.2	0.9	0.8
600	24	18.3	6.7	3.7	2.4	1.6	1.1	0.8	0.7

334A Applicable Flange Standard Table

■150Lb Wafer Type

Nominal size		ASME/JPI 50Lb	JIS 10K	JIS 16/20K	BS4504(DIN) PN 10	BS4504(DIN) PN 16
mm	inch					
50	2	○※1	○※1	D※2	D※2	○※1
80	3	○※1	D※2	D※2	D※2	D※2
100	4	D※2	D※2	D※2	D※2	D※2
150	6	D※2	D※2	D※2	D※2	D※2
200	8	D※2	D※2	D※2	D※2	D※2
250	10	D※2	D※2	D※2	D※2	D※2
300	12	D※2	D※2	D※2	D※2	D※2
350	14	D※2	D※2	D※2	D※2	D※2
400	16	D※2	D※2	D※2	D※2	D※2
450	18	T	T	T	T	T
500	20	T	T	T	T	T
600	24	T	T	T	T	T

※1 : Can be used without flange drilling.
※2 : There are 2 upper drilling holes for 50mm and 80mm to 250mm types, and a total of 4 drilling holes, 2 upper and 2 lower, for 300mm to 400mm types.

D: With flange drilling
T: With flange tapping
○: Can be used without flange drilling.

■150Lb Lugged Type

Nominal size		ASME/JPI 50Lb	JIS 10K	JIS 16/20K	BS4504(DIN) PN 10	BS4504(DIN) PN 16
mm	inch					
50	2	T	T	T※1	T	T
80	3	T	T※1	T※1	T※1	T※1
100	4	T※1	T※1	T※1	T※1	T※1
150	6	T	T	T※1	T	T
200	8	T	×	T※1	T	T※1
250	10	T	T	T	T	T
300	12	T	×	T※1	T	T
350	14	T	×	×	×	×
400	16	T	T	T	T	T
450	18	T	×	×	×	×
500	20	T	T	T	T	T
600	24	T	×	T※1	T	T

※1 : Use 300Lb body. In this case, 300Lb body of 150mm or more in the nominal size must note that the face-to-face dimensions are different.
※ : Please consult with us regarding drilling holes for the lugged type.

T: With flange tapping
×: A special wooden form is required.

334A Applicable flange standard

■300Lb Wafer type

Nominal size		ASME/JPI 300Lb	JIS20K	JIS30K	BS4504(DIN) PN25	BS4504(DIN) PN40
mm	inch					
50	2	D※2	D※2	D※2	○※1	○※1
80	3	D※2	D※2	D※2	D※2	D※2
100	4	D※2	D※2	D※2	D※2	D※2
150	6	D※2	D※2	D※2	D※2	D※2
200	8	D※2	D※2	D※2	D※2	D※2
250	10	T	D※2/T	D※2/T	D※2/T	D※2 (T)
300	12	T	T	T	T	T
350	14	T	T	T	T	T
400	16	T	T	T	T	T
450	18	T	T		T	T
500	20	T	T		T	T
600	24	T	T		T	T

※1 : Can be used without flange drilling.
※2 : There are 2 upper drilling holes for 50mm and 80mm to 250mm types, and a total of 4 drilling holes, 2 upper and 2 lower, for 300mm to 400mm types.

D/T: With drill hole or tapping.
D : With flange drilling
T : With flange tapping

■300Lb Lugged type

Nominal size		ASME/JPI 300Lb	JIS20K	JIS30K	BS4504(DIN) PN25	BS4504(DIN) PN40
mm	inch					
50	2	T	T	T	T※	T※
80	3	T	T	T	T	T
100	4	T	T	T	T	T
150	6	T	T	T	×	×
200	8	T	T	T	T	T
250	10	T	×	×	×	×
300	12	T	T	T	T	T
350	14	T	×	×	×	×
400	16	T	×	×	×	×
450	18	T	×		×	×
500	20	T	×		×	×
600	24	T	T		×	×

※ Please consult with us regarding drilling holes for the lugged type.

T : With flange tapping
× : A special wooden form is required.

334A-300Lb/150Lb Applicable Pipe List in Case

Nominal size		JIS (STPG)			ANSI B36.1		
mm	inch	Sch#40	Sch#60	Sch#80	Sch#40	Sch#60	Sch#80
50	2	○	○	○	○		○
80	3	○	○	○	○		○
100	4	○	○	○	○		○
150	6	○	○	○	○		○
200	8	○	○	○	○	○	○
250	10	○	○	○	○	○	○
300	12	○	○	○	○	○	○
350	14	○	○	○	○	○	○
400	16	○	○	○	○	○	○
450	18	○	○	○	○	○	○
500	20	○	○	○	○	○	○
600	24	○	○	○	○	○	○

※ Determine the appropriateness of using other pipes according to the minimum internal pipe diameter indicated in the following table.

334A Miniumum Internal Diameters of Piping

Nominal size		Miniumum internal diameters of piping	
mm	inch	150Lb	300Lb
50	2	45	45
80	3	73	73
100	4	93	93
150	6	138	138
200	8	186	185
250	10	226	225
300	12	268	267
350	14	310	306
400	16	354	347
450	18	402	394
500	20	444	438
600	24	535	533

※ The gap between the disc edge and the pipe is smallest at the stem side flange face when all nominal sizes are fully open.

※ Because the above gap is calculated with the pipe considered as extending up to the flange end, the value will differ depending on the way the pipe and flange are welded.

334A Piping Gasket

* In case of sheet gasket ..... Any standard can be used.
* In case of spiral gasket
  For API, JPI, ANSI flange ..... Any standard gaskets with inner/outer ring can be used.
  For JIS flange ..... Use special spiral gasket shown below.

●334A Special Spiral Gasket Flange Size

Nominal size		D_1	D_2	D_3	D_4								
					ASME JPI		JIS			BS4504			
mm	inch				Class 150	Class 300	10K	16/20K	30K	PN10	PN16	PN25	PN40
50	2	61	69	88	104	111	104	104	114	109	109	109	109
80	3	89	97	120	136	148	134	140	150	144	144	144	144
100	4	115	124	145	174	180	159	165	172	164	164	170	170
150	6	166	178	205	222	250	220	237	249	220	220	226	226
200	8	217	227	256	279	307	270	282	294	275	275	286	293
250	10	268	278	315	339	362	332	354	360	330	331	343	355
300	12	319	339	370	409	422	377	404	418	380	386	403	420
350	14	256	369	403	450	485	422	450	463	440	446	460	477
400	16	406	420	457	514	539	484	508	524	491	498	517	549
450	18	458	472	517	549	596	539	573	—	541	558	567	574
500	20	508	523	567	606	654	594	628	—	596	620	627	631
600	24	610	626	672	717	774	700	734	—	698	737	734	750

※ Using 334A gasket for size 300, 350mm.
Using TOMOE 300 series for other.

Remark : In case a minute leakage of gas (less than 100PPm) becomes a problem, please inquire of our business charge.

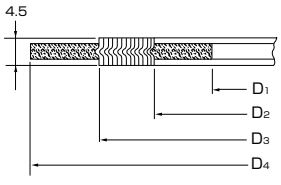

●Commercially Available Spiral Gaskets (with inner and outer ring)

Nominal size		ASME/JPI	JIS			BS4504
mm	inch	150/300Lb	10K	16K/20K	30K	PN10, 16, 25, 40
50	2	○	○	○	○	○
80	3	○	○	○	×	○
100	4	○	×	○	×	○
150	6	○	×	×	×	×
200	8	○	×	×	×	×
250	10	○	×	×	×	×
300	12	○	×	○	×	×
350	14	○	×	×	×	○
400	16	○	×	×	○	○
450	18	○	×	×	–	○
500	20	○	×	×	–	○
600	24	○	×	×	–	○

○:Can be use., ×:Can not be used, –:No Standard

334A Applicable Gasket Standard Table for Piping

Nominal size		Joint sheet and RPTFE solid gasket (t≦2mm)				*PTFE mold type gasket VALQUA or NICHIASU	
		ASME/JPI	JIS		BS4504	ASME/JPI	JIS
mm	inch	150/300Lb	10K, 16K, 20K	30K	PN10,16,25,40	150/300Lb	10K, 16K, 20K
50	2	○	○	○	○	○	○
80	3	○	○	○	○	○	○
100	4	○	○	○	○	○	○
150	6	○	○	○	○	○	○
200	8	○	○	○	○	○	○
250	10	○	○	○	○	○	○
300	12	○	○	○	○	○	○
350	14	○	○	○	○	○	○
400	16	○	○	○	○	○	○
450	18	○	○	–	○	○	○
500	20	○	○	–	○	○	○
600	24	○	○	–	○	○	○

*All standard joint seats and PTFE cut gaskets can be used.
*Only VALQUA flawless gaskets (Part No.: 7030/7031/7035) and NICHIAS PTFE cushion gaskets (Part No.: 9010/9011) can be used.
(Products from other manufacturers cannot be used due to their dimensions.)

334A Piping Bolts and Nuts Sizes

■150Lb Wafer Type

Nominal size		ASME/JPI class150			JIS10K		
mm	inch	Setting Bolts	Long Bolts	No.of Nuts	Setting Bolts	Long Bolts	No.of Nuts
50	2	—	4- 5/8-11UNC×140	8	—	4-M16×135	8
80	3	—	4- 5/8-11UNC×160	8	—	8-M16×145	16
100	4	—	8- 5/8-11UNC×160	16	—	8-M16×145	16
150	6	—	8- 3/4-10UNC×175	16	—	8-M20×170	16
200	8	—	8- 3/4-10UNC×185	16	—	12-M20×180	24
250	10	—	12- 7/8-9UNC×205	24	—	12-M22×190	24
300	12	—	12- 7/8-9UNC×220	24	—	16-M22×200	32
350	14	—	12- 1-8UNC ×245	24	—	16-M22×215	32
400	16	—	16- 1-8UNC ×260	32	—	16-M24×240	32
450	18	8-1 1/8-8UN×140(24×16)	12-1 1/8-8UN ×285	32	8-M24×120(21×14)	16-M24×250	40
500	20	8-1 1-8-8UN×145(24×16)	16-1 1-8-8UN ×300	40	8-M24×120(21×14)	16-M24×260	40
600	24	8-1 1/4-8UN×150(24×16)	16-1 1/4-8UN ×345	40	8-M30×135(24×16)	20-M30×310	48

Nominal size		JIS16K			JIS20K		
mm	inch	Setting Bolts	Long Bolts	No.of Nuts	Setting Bolts	Long Bolts	No.of Nuts
50	2	—	8-M20 ×135	16	—	8-M20 ×135	16
80	3	—	8-M20 ×160	16	—	8-M20 ×160	16
100	4	—	8-M20 ×170	16	—	8-M20 ×170	16
150	6	—	12-M22 ×175	24	—	12-M22 ×190	24
200	8	—	12-M22 ×190	24	—	12-M22 ×200	24
250	10	—	12-M24 ×210	24	—	12-M24 ×220	24
300	12	—	16-M24 ×220	32	—	16-M24 ×230	32
350	14	—	16-M30(P3)×250	32	—	16-M30(P3)×260	32
400	16	—	16-M30(P3)×275	32	—	16-M30(P3)×285	32
450	18	8-M30(P3)×140(24×16)	16-M30(P3)×285	40	8-M30(P3)×150(24×16)	16-M30(P3)×300	40
500	20	8-M30(P3)×145(24×16)	16-M30(P3)×300	40	8-M30(P3)×155(24×16)	16-M30(P3)×315	40
600	24	8-M36(P3)×160(30×20)	20-M36(P3)×355	48	8-M36(P3)×170(30×20)	20-M36(P3)×365	48

Nominal size		BS4504 PN10※			BS4504 PN16※		
mm	inch	Setting Bolts	Long Bolts	No.of Nuts	Setting Bolts	Long Bolts	No.of Nuts
50	2	—	4-M16×135	8	—	4-M16×135	8
80	3	—	8-M16×145	16	—	8-M16×145	16
100	4	—	8-M16×155	16	—	8-M16×155	16
150	6	—	8-M20×170	16	—	8-M20×170	16
200	8	—	8-M20×180	16	—	12-M20×180	24
250	10	—	12-M20×190	24	—	12-M24×200	24
300	12	—	12-M20×200	24	—	12-M24×220	24
350	14	—	16-M20×210	32	—	16-M24×230	32
400	16	—	16-M24×230	32	—	16-M27×250	32
450	18	8-M24×115(21×14)	16-M24×250	40	8-M27×125(22×14)	16-M27×265	40
500	20	8-M24×115(21×14)	16-M24×260	40	8-M30×140(24×16)	16-M30×285	40
600	24	8-M27×120(22×14)	16-M27×310	40	8-M33×150(27×18)	16-M33×330	40

334A Piping Bolts and Nuts Sizes

■150Lb Lugged Type（All taps）

Nominal size		ASME/JPI class 150		JIS10K		JIS16K	
mm	inch	Setting Bolts	No.of Nuts	Setting Bolts	No.of Nuts	Setting Bolts	No.of Nuts
50	2	8- 5/8-11UNC× 75(13× 8)	8	8-M16×75(13× 8)	8	8-M16× 75(13× 8)	8
80	3	8- 5/8-11UNC× 85(13× 8)	8	16-M16×75(13× 8)	16	16-M20× 85(17×11)	16
100	4	16- 5/8-11UNC× 85(13× 8)	16	16-M16×75(13× 8)	16	16-M20× 90(17×11)	16
150	6	16- 3/4-10UNC× 95(17×11)	16	16-M20×90(17×11)	16	—	—
200	8	16- 3/4-10UNC×100(17×11)	16	—	—	—	—
250	10	24- 7/8- 9UNC×115(19×12)	24	24-M22×105(19×12)	24	24-M24×115(21×14)	24
300	12	24- 7/8- 9UNC×115(19×12)	24	—	—	—	—
350	14	24- 1-8UNC×125(21×14)	24	—	—	—	—
400	16	32- 1-8UNC×125(21×14)	32	32-M24×115(21×14)	32	32-M30(P3)×140(24×16)	32
450	18	32-1 1/8-8UN ×140(24×16)	32	—	—	—	—
500	20	40-1 1/8-8UN ×145(24×16)	40	40-M24×125(21×14)	40	40-M30(P3)×150(24×16)	40
600	24	40-1 1/4-8UN ×160(24×16)	40	—	—	—	—

Nominal size		JIS20K		BS4504 PN10※		BS4504 PN16※	
mm	inch	Setting Bolts	No.of Nuts	Setting Bolts	No.of Nuts	Setting Bolts	No.of Nuts
50	2	8-M16× 75(13× 8)	8	8-M16× 75(13× 8)	8	8-M16× 75(13× 8)	8
80	3	16-M20× 85(17×11)	16	16-M16× 75(17×11)	16	16-M16× 75(13× 8)	16
100	4	16-M20× 90(17×11)	16	16-M16× 75(17×11)	16	16-M16× 75(13× 8)	16
150	6	—	—	16-M20× 90(17×11)	16	16-M20× 90(17×11)	16
200	8	—	—	16-M20× 95(17×11)	16	—	—
250	10	24-M24×125(21×14)	24	24-M20×105(17×11)	24	24-M24×115(21×14)	24
300	12	—	—	24-M20×105(17×11)	24	24-M24×115(21×14)	24
350	14	—	—	—	—	—	—
400	16	32-M30(P3)×145(24×16)	32	32-M24×115(21×14)	32	32-M27×125(22×14)	32
450	18	—	—	—	—	—	—
500	20	40-M30(P3)×155(24×16)	40	40-M24×120(21×14)	40	40-M30×140(24×16)	40
600	24	—	—	40-M27×125(22×14)	40	40-M33×150(27×18)	40

Note: Bolt/Nut material: SNB7/S45C
Please use a nut with a height that is 100% of the screw diameter.
The bolt length calculation is based on use of a 4.5 mm thick spiral gasket.
The flange thickness calculation is based on the standard steel flange thickness.
※ Mark: The flange thickness calculation is based on the welding neck flange thickness.
Quantities shown are for one valve.

Examples

Setting bolts: 8 - M16 × 75 (13 × 8)
N M L b L1

Long bolts: 4 - M16 × 145
N M L

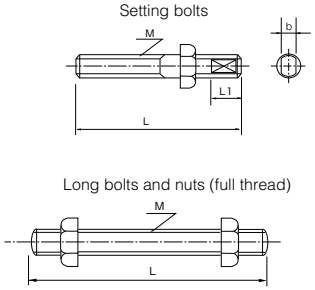

334A Piping Bolts and Nuts Sizes

■300Lb Wafer

Nominal size		ASME/JPI class300			JIS20K		
mm	inch	Setting Bolts	Long Bolts	No.of Nuts	Setting Bolts	Long Bolts	No.of Nuts
50	2	—	8- 5/8-11UNC×140	16	—	8-M16 ×135	16
80	3	—	8- 3/4-10UNC×175	16	—	8-M20 ×160	16
100	4	—	8- 3/4-10UNC×185	16	—	8-M20 ×170	16
150	6	—	12- 3/4-10UNC×200	24	—	12-M22 ×190	24
200	8	—	12- 7/8-9UNC×235	24	—	12-M22 ×200	24
250	10	8-1-8UNC×125(21×14)	12- 1-8UNC×260	32	8(0)-M24 ×110(21×14)	8(12)-M24 ×230	24
300	12	8-1 1/8-8UN×135(24×16)	12-1 1/8-8UN ×285	32	8-M24 ×120(21×14)	12-M24 ×240	32
350	14	8-1 1/8-8UN×145(24×16)	16-1 1/8-8UN ×315	40	8-M30(P3)×140(24×16)	12-M30(P3)×285	32
400	16	8-1 1/4-8UN×155(24×16)	16-1 1/4-8UN ×345	40	8-M30(P3)×140(24×16)	12-M30(P3)×315	32
450	18	8-1 1/4-8UN×155(24×16)	20-1 1/4-8UN ×365	48	8-M30(P3)×145(24×16)	16-M30(P3)×335	40
500	20	8-1 1/4-8UN×160(24×16)	20-1 1/4-8UN ×380	48	8-M30(P3)×150(24×16)	16-M30(P3)×350	40
600	24	8-1 1/2-8UN×190(30×20)	20-1 1/2-8UN ×430	48	8-M36(P3)×175(30×20)	20-M36(P3)×385	48

Nominal size		JIS30K		
mm	inch	Setting Bolts	Long Bolts	No.of Nuts
50	2	—	8-M16 ×145	16
80	3	—	8-M20 ×170	16
100	4	—	8-M22 ×190	16
150	6	—	12-M24 ×210	24
200	8	—	12-M24 ×240	24
250	10	8(0)-M30(P3)×135(24×16)	8(12)-M30(P3)×275	24
300	12	8-M30(P3)×145(24×16)	12-M30(P3)×285	32
350	14	8-M30(P3)×155(24×16)	12-M30(P3)×315	32
400	16	8-M36(P3)×170(30×20)	12-M36(P3)×355	32

Nominal size		BS4504(DIN)NP25			BS4504(DIN)NP40		
mm	inch	Setting Bolts	Long Bolts	No.of Nuts	Setting Bolts	Long Bolts	No.of Nuts
50	2	—	4-M16×145	8	—	4-M16 ×145	8
80	3	—	8-M16×155	16	—	8-M16 ×155	16
100	4	—	8-M20×170	16	—	8-M20 ×170	16
150	6	—	8-M24×190	16	—	8- M24×190	16
200	8	—	12-M24×210	24	—	12-M27×230	24
250	10	8(0)-M27×115(22×14)	8(12)-M27×230	24	8(0)-M30×125(24×16)	8(12)-M30×250	24
300	12	8-M27×115(22×14)	12-M27×250	32	8-M30×125(24×16)	12-M30×270	32
350	14	8-M30×135(24×16)	12-M30×285	32	8-M33×150(27×18)	12-M33×310	32
400	16	8-M33×145(27×18)	12-M33×310	32	8-M36×160(30×20)	12-M36×340	32
450	18	8-M33×145(27×18)	16-M33×330	40	8-M36×160(30×20)	16-M36×355	40
500	20	8-M33×150(27×18)	16-M33×350	40	8-M39×170(32×21)	16-M39×375	40
600	24	8-M36×170(30×20)	16-M36×380	40	8-M45×200(36×24)	16-M45×430	40

334A Piping Bolts and Nuts Sizes

■300 Lb Lugged (fully-tapped)

Nominal size		ASME/JPI class300		JIS20K		JIS30K	
mm	inch	Setting Bolts	No.of Nuts	Setting Bolts	No.of Nuts	Setting Bolts	No.of Nuts
50	2	16-5/8-11UNC×75(13× 8)	16	16-M16× 75(13× 8)	16	—	—
80	3	16-3/4-10UNC×90(17×11)	16	16-M20× 85(17×11)	16	16-M20× 85(17×11)	16
100	4	16-3/4-10UNC×90(17×11)	16	16-M20× 85(17×11)	16	16-M22×100(19×12)	16
150	6	24-3/4-10UNC×95(17×11)	24	24-M22×100(19×12)	24	24-M24×110(21×14)	24
200	8	24-7/8-9UNC×110(19×12)	24	24-M22×100(19×12)	24	24-M24×115(21×14)	24
250	10	32- 1-8UNC×125(21×14)	32	—	—	—	—
300	12	32-1 1/8-8UN×135(24×16)	32	32-M24×110(21×14)	32	32-M30(P3)×140(24×16)	32
350	14	40-1 1/8-8UN×145(24×16)	40	—	—	—	—
400	16	40-1 1/4-8UN×160(24×16)	40	—	—	—	—
450	18	48-1 1/4-8UN×160(24×16)	48	—	—	—	—
500	20	48-1 1/4-8UN×160(24×16)	48	—	—	—	—
600	24	48-1 1/2-8UN×190(30×20)	48	48-M36(P3)×170(30×20)	48	—	—

Nominal size		BS4504(DIN)NP25		BS4504(DIN)NP40	
mm	inch	Setting Bolts	No.of Nuts	Setting Bolts	No.of Nuts
50	2	8-M16× 75(13× 8)	8	8-M16× 75(13× 8)	8
80	3	16-M16× 75(13× 8)	16	16-M16× 75(13× 8)	16
100	4	16-M20× 85(17×11)	16	16-M20× 85(17×11)	16
150	6	—	—	—	—
200	8	24-M24×110(21×14)	24	24-M27×115(22×14)	24
250	10	—	—	—	—
300	12	32-M27×115(24×14)	32	32-M30×115(24×16)	32
350	14	—	—	—	—
400	16	—	—	—	—
450	18	—	—	—	—
500	20	—	—	—	—
600	24	—	—	—	—

Note: Bolt/Nut material: SNB7/S45C
Please use a nut with a height that is 100% of the screw diameter.
The bolt length calculation is based on use of a 4.5 mm thick spiral gasket.
The flange thickness calculation is based on the standard steel flange thickness.
Quantities shown are for one valve.
250 mm bolt quantities are indicated as follows: The quantity outside the brackets applies when the setting bolt holes are tapped and the values inside the brackets apply when the setting bolt holes are drilled.

Examples

Setting bolts: 8 - M16 × 75 (13 × 8)
N M L b L1

Long bolts: 4 - M16 × 145
N M L

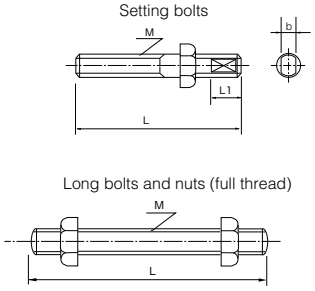

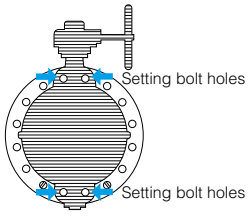

Double offset metal seat high performance butterfly valves to suit API standards 150 Lb Rating

Tom Disco®

302A Wafer

303Q Lugged



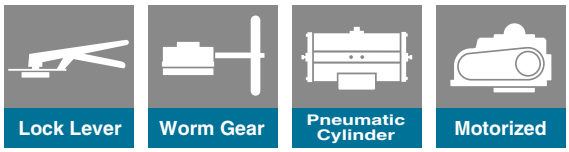

Features and Benefits

Fire safe design

Designed as an inherently fire safe metal seated butterfly valve. Certified to Fire Safe Test as per API 607 4th Edition.

Bi-directional flow

Seals flow in both directions. The valves can be used even if the flow changes direction. (There are pressure limitations for each direction of flow. See chart for recommended specifications).

Disc with reinforced rib

Discs up to 300mm have a thin cross section but feature a reinforcing rib. As for 350mm to 600mm, the disc rib has a convex figuration. These designs successfully reduce thermal expansion and provide a constant sealing performance against any change in temperature or pressure of the fluid.

Double offset geometry

The axis of disc rotation is double offset to the seat ring. When the disc rotates, it unseats at a small turning angle by its cam effect. This prevents seat wear and provides reliable sealing performance over long periods.

Metal Seat

The resilient metal seat ring with coil spring compensates for thermal expansion or contraction of the body or disc. The ball lock method is adopted to facilitate replacement of the seat ring.

Improved reliability

By minimising the effect of friction and the special hard facing of the seating, the reliability of this metal seat butterfly valve is dramatically improved. The key connection of the disc and stem will prevent the direct effect of heat transaction from the stem to the disc as well as provide an anti-blow-out facility on the stem.

General description

Inherent fire safe design with carbon steel or stainless steel body with ASME/ANSI B16.34 Class 150 rating and API 609 pressure temperature rating. Ideal for use in general hydrocarbon, chemical process, low pressure steam and gas applications.

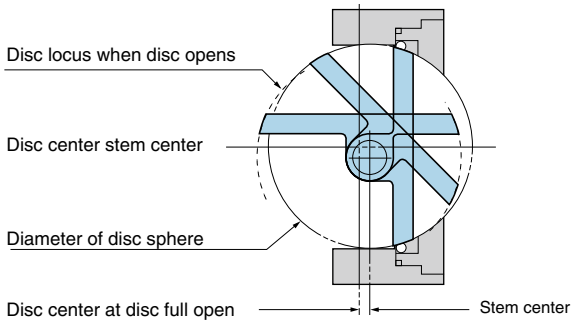

Double-Eccentric Disc

The axis of disc rotation is double eccentric to the seat rings. When the disc rotates, it unseats at a small turning angle by its cam effect. This prevents seat wear and provides a perfect seal for long periods.

Fire Safe Seat Design

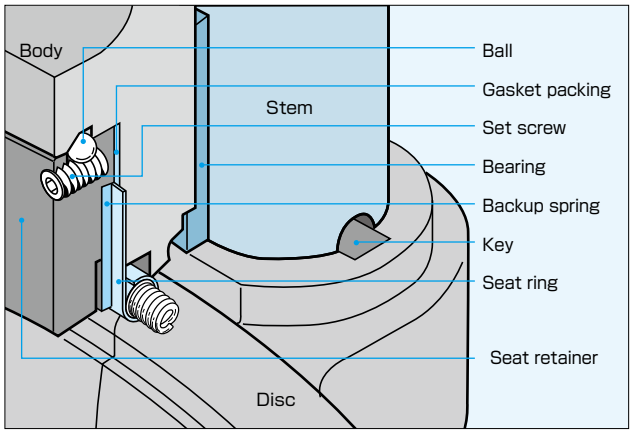

Standard Specifications

Valve nominal size※1		80, 100, 125, 150, 200, 250, 300mm		350, 400, 450, 500, 600mm
Applicable flange standard		JIS 10K/16K/20K ANSI 125/150Lb API/JPI 150Lb BS10 Table F BS 4504 PN 10/16 DIN NP10/16		JIS 5K/10K/16K/20K ANSI 125/150Lb API/JPI 150Lb BS10 Table E BS 4504 PN 10/16 DIN NP10/16
Face-to-face dimensions		API 609(class 150Lb, category B), JPI-7S-83(class 150Lb) ※125mmis as per JIS B 2002 (series 46)/ISO 5752 (series 20)		
Seat leakage		API 598-7th Edition※		
Connection		Double Offset Wafer Type (Option:Flanged,Lugged)		
Pressure-temperatue-rating※2		API 609 class 150Lb category B, ASME/ANSI B16.34 class 150Lb		
Fire safe		API 607 4th Edition		
Max. working pressure ※2		2.0MPa		
Working temperature range※3		–29 to 600 degrees C (Ext. bonnet is required at 400 degrees C and or over)		
Flow direction		Bi-directional flow (Flow to disc side is recommended.) ┌ Flow to disc side (2.0 MPa) └ Flow to stem side (1.0 MPa)※4		
Pressure test	Body shell	3.1 MPa (API 598 7th Edition) by hydraulic		
	Seat leak	7 bar (API 598 7th Edition) by air		
Standard materials	Body	SCPH2/WCB, SCS 14A/CF8M		SCPH2/WCB, SCS 13A/CF8, SCS 14A/CF8M
	Disc	80mm to 150mm	200mm to 300mm	350mm to 600mm
		SCS 16A(hard chrome plating)	SCS 14A(hard chrome plating)	SCS 13A(hard chrome plating), SCS 14A(hard chrome plating)
	Stem	SUS 420J2, SUS 329J1, SUS 316, SUS 329J4L		SUS 420J2, SUS 304, SUS 630
	Seat ring	SUS316L		
Coating		Silicon resin coating (Grey N7) for under 200 degrees C Heat resistant silver coating for 200 degrees C and over. No coating for stainless steel.		
Option		Anti-static device		

※1. Please use 302Y or 337Y if using a nominal valve diameter of 50mm and 65mm.
※2. Refer to pressure – temperature rating chart on page 302A/303Q-05.
※3. Contact us at 400 degrees C and or over for oxidizing atmosphere.
※4. Contact us regarding 350～600mm flowing to stem side.

※It is possible that seat leakage occur when fluid (e.g. powder and/or liquid) is solidified by working temperature and other cause. Consult us.
Please note that use with vertical line such as bottom area of discharge spout of hopper, and tank.

Allowable leakage rate for closure test (API 598)

Nominal size	Duration	Fluid	Allowable rate
80mm～150mm	1min	air	24bubbles / min or less(approx.1.5cc / min)
200mm～300mm	2min		40bubbles / min or less(approx.2.5cc / min)
350mm～600mm	2min		56bubbles / min or less(approx.3.5cc / min)

302A Expanded view of components

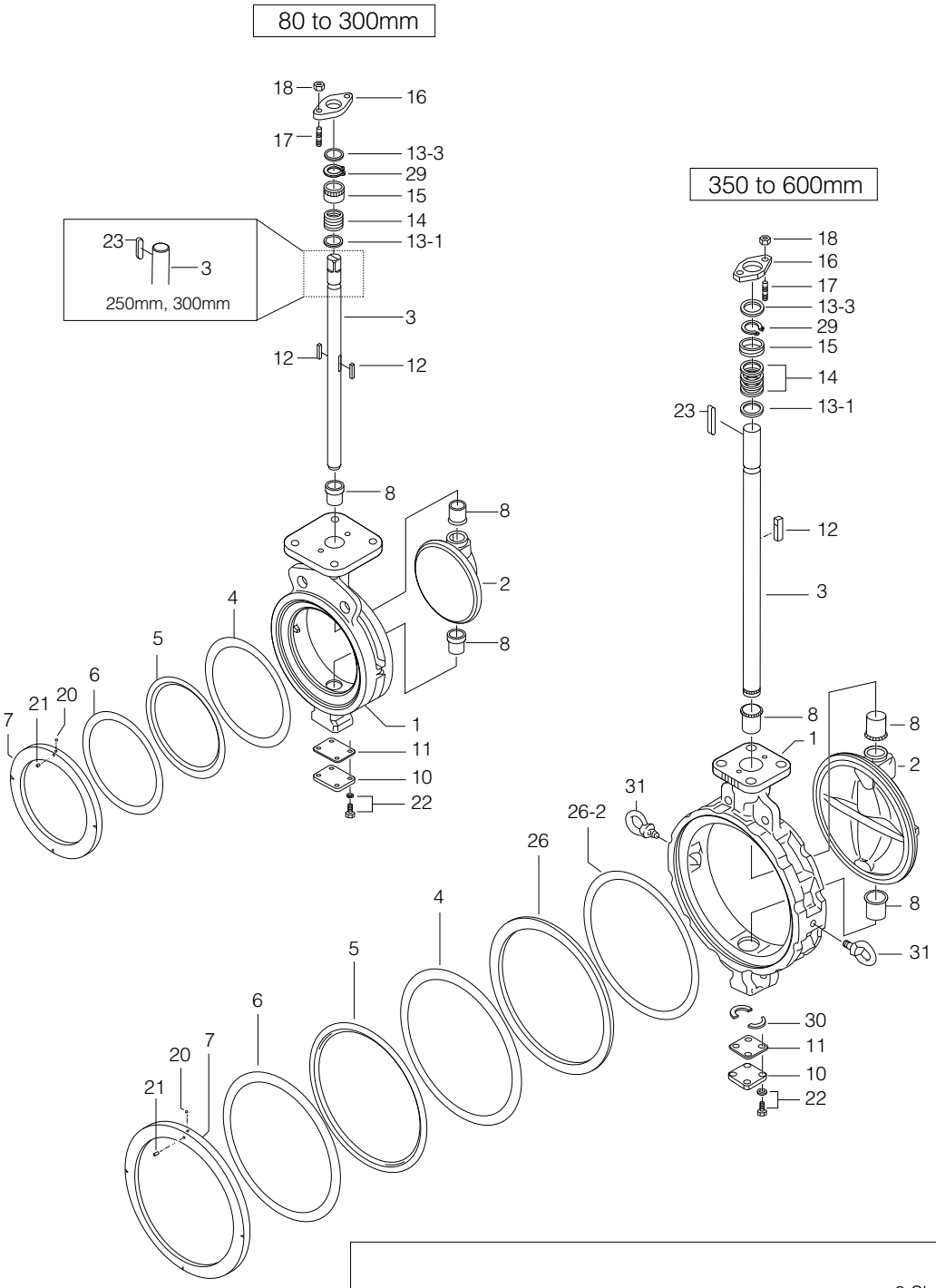

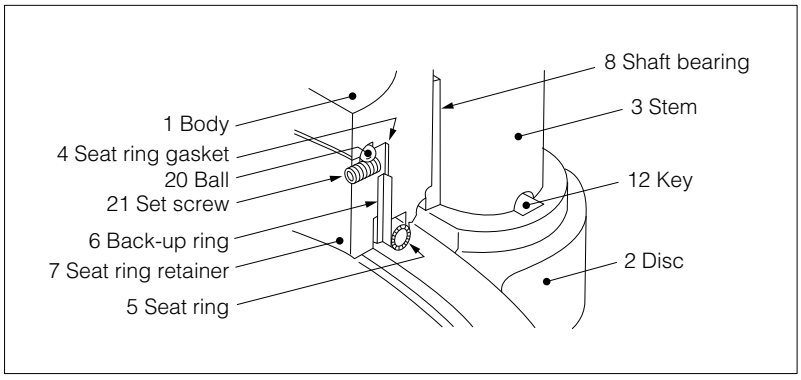

■302A Parts List (80mm to 300mm: −29 to 400 degrees C)

No.	Description	Q'ty	Remarks
1	Body	1	
2	Disc	1	
3	Stem	1	
★ 4	Seat ring gasket	1	
★ 5	Seat ring	1	
★ 6	Back-up ring	1	
7	Seat ring retainer	1	
8	Shaft bearing	3	
10	Bottom cover	1	
★ 11	Bottom gasket	1	
12	Key	2	
13-1	Packing retainer	1	
13-3	Ring	1	
★ 14	Gland packing	1 set	
15	Gland bush	1	
16	Gland flange	1	
17	Gland bolt	2	80mm to 125mm
18	Gland nut	2	150mm to 300mm
★ 20	Ball	2	80mm to 125mm
		4	150mm to 300mm
★ 21	Set screw	2	
		4	Only 250mm, 300mm
22	Hexagon bolt, Spring washer	4 sets	
23	Stem key	1	
29	C-ring	1	

■302A Parts List (350mm to 600mm: −29 to 400 degrees C)

No.	Description	Q'ty	Remarks
1	Body	1	
2	Disc	1	
3	Stem	1	
★ 4	Seat ring gasket	1	
★ 5	Seat ring	1	
★ 6	Back-up ring	1	
7	Seat ring retainer	1	
8	Shaft bearing	3	
10	Bottom cover	1	
★ 11	Bottom gasket	1	
12	Key	1	
13-1	Packing retainer	1	
13-3	Ring	1	
★ 14	Gland packing	1 set	
15	Gland bush	1	
16	Gland flange	1	
17	Gland bolt	2	
18	Gland nut	2	
★ 20	Ball	4	
★ 21	Set screw	4	
22	Hexagon bolt, Spring washer	4 sets	
23	Stem key	1	
26	Sub-retainer	1	
26-2	Seat spacer	1	Only 350mm
29	C-ring	1	
30	Thrust ring	2	
31	Eye bolt	2	Only 450mm to 600mm

Remark: The ★ indicates recommended spare parts. They are supplied as "Seat ring set" with a small hexagonal spanner to remove set screws (Part #21 set screw).

302A Actuator Selection Chart

■80mm to 300mm

Model	Category	Size (mm / inch) 80 / 3	100 / 4	125 / 5	150 / 6	200 / 8	250 / 10	300 / 12
1T	T10	1T-2			1T-3			
	T20							
2U,2S	T10	2U-2			2U-4	DGH-2	DGH-3	
	T20							
7E,3A	T10	T85	T200		T380	T750		
	T20						TGA-125	
7G,7F 3U,3K	T10	T200S	T380S	T750S		TG-12S		
	T20	T380S			TG-10S		TG-14S	
4 I	T10	4 I -0	4 I -1	4 I -2		4 I -2.5	4 I -3	
	T20	4 I -1			4 I -2.5			
4J,4L	T10	SRJ-010	SRJ-020			SRJ-060		
	T20				SRJ-060	SRJ-1	LTKD-01 0.2kW/DGH-3	

■302A Pressure Rating

SCPH2

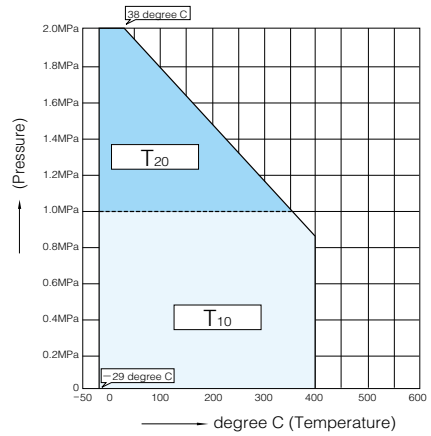

SCS14A

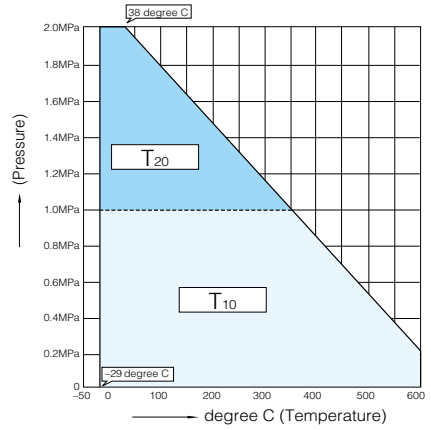

302A Standard Stem Material

■80mm to 300mm

SCS 14A/CF8M Body

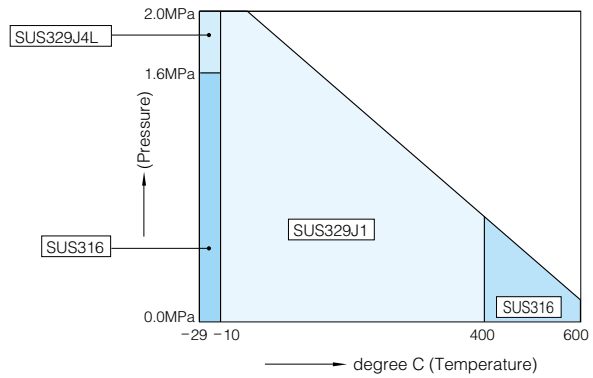

Pressure \ Temp.	−29 to less than −10 degrees C	−10 to less than 400 degrees C	400 to 600 degrees C
0 to less than 1.6MPa	SUS 316	SUS 329J1	SUS 316
1.6 to 2.0MPa	SUS 329J4L		

SCPH2/WCB Body

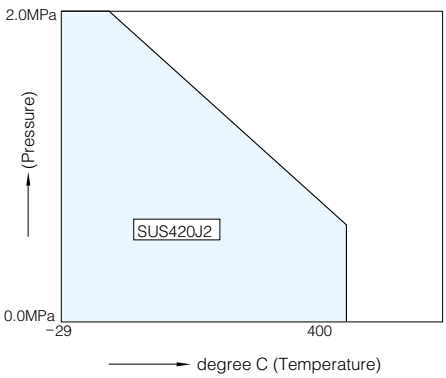

Pressure \ Temp.	−29 to less than 400 degrees C
0 to 2.0MPa	SUS 420J2

※1 Framed description shows stem material.
※2 Refer to Pressure - Temperature chart.
※3 Consult us regarding other materials.

302A Actuator Selection Chart

■350mm to 600mm

Model	Category	Size (mm / inch) 350 / 14	400 / 16	450 / 18	500 / 20	600 / 24
2S	A, B, C	DGH-3	DGH-4	DGH-4+R/G5	DGH-4+R/G5	DGH-4.5 +R/G5
3A	A, B, C	TGA-125	TGA-140	TGA-160	TGA-160	TGA-180
			TGA-160		TGA-180	TGA-200
						TGA-220
3U,3K	A, B, C	TG-14S	TG-20S			
4 I	A, B, C	4 I -4				
4L	A	LTKD-01 0.2kW/DGH-3	LTKD-02 0.4kW/DGH-4	LTKD-02 0.75kW/DGH-4		LTKD-02 1.5kW/DGH-4
	B		LTKD-02 0.4kW/DGH-4			LTKD-02 1.5kW/DGH-5
	C	LTKD-02 0.4kW/DGH-4			LTKD-02 1.5kW/DGH-4	LTKD-05 1.5kW/DGH-5

■302A Pressure Rating

SCPH2

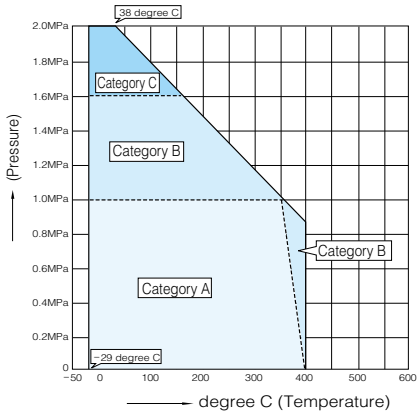

SCS13A

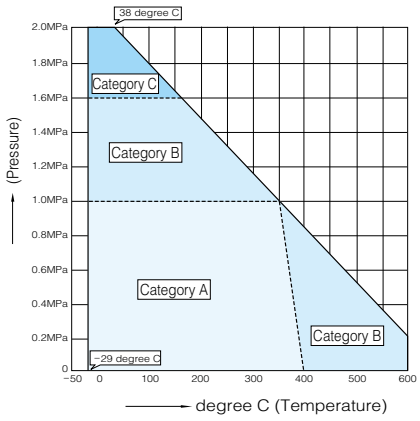

302A Standard Stem Material

■350mm to 600mm

SCS 13A/CF8, SCS 14A/CF8M Body

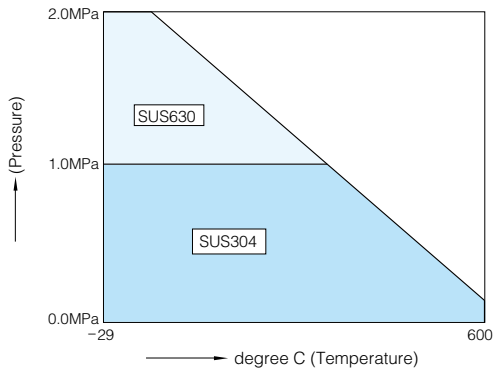

Pressure \ Temp.	−29 to 600 degrees C
0 to less than 1.0MPa	SCS 13A body: SUS 304 SCS 14A body: SUS 316
1.0 to 2.0MPa	SUS 630

SCPH2/WCB Body

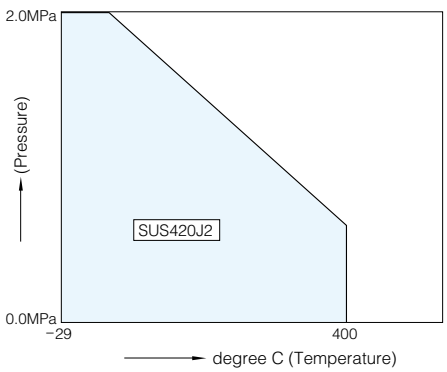

Pressure \ Temp.	−29 to less than 400 degrees C
0 to 2.0MPa	SUS 420J2

※1 Framed description shows stem material.
※2 Refer to Pressure - Temperature chart.
※3 Consult us regarding other materials.

Dimension List

■302A 80mm～200mm ■302A 250mm～400mm ■302A 450mm～600mm

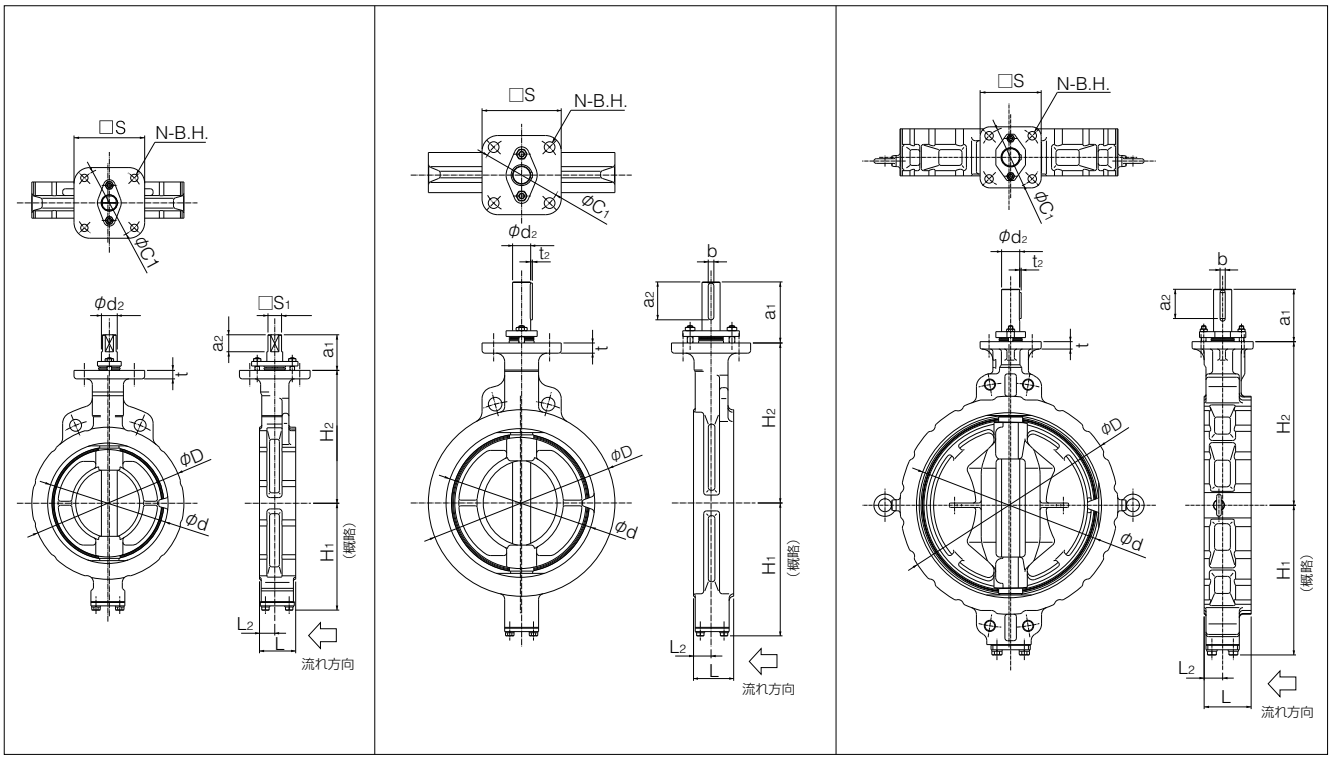

■−29 to less than 400 degrees C

Stem shape	Nominal size		Dimension (mm)														Approx. Weight (kg)
	mm	inch	φd	φ1	L	L2	H1	H2	a1	a2	□S1	φd2	b	t2	t	ISO 5211 Top Flange	
01	80	3	89	127	48	22	95	147	52.5	16.5	14	16	–	–	15	F10	5
	100	4	112	156	54	24	110	170	52.5	16.5	14	16	–	–	15	F10	6.2
	125	5	137	185	56	23	139	185	52.5	16.5	16	20	–	–	15	F10	9.3
	150	6	163	216	57	23.5	164	205	55.5	20	18	22	–	–	15	F12	12.5
	200	8	213	269	64	27	190	235	63	30	24	28	–	–	15	F12	19
02	250	10	263	330	71	31	236	283	108	67.3	–	32	10	3	18	F14	33
	300	12	315	381	81	35	246	310	113	72.3	–	35	10	3	18	F14	42
	350	14	350	416	92	39.5	308	340	113	72	–	38	10	3	18	F14	61
	400	16	400	475	102	39	348	372	113	72	–	42	12	3.5	18	F14	88
	450	18	450	534	114	43	366	406	141.5	68	–	45	12	3.5	20	F16	135
	500	20	500	589	127	50	405	442	141.5	79	–	49	14	4	20	F16	173
	600	24	600	693	154	64	461	493	141.5	80	–	59	16	5	20	F16	272

Stem shape	01 : square 02 : round with key

■Top Flange Dimension

ISO 5211 Top Flange	□S	φC1	N	B.H.
F10	102	102	4	11
F12	125	125	4	13
F14	140	140	4	19
F16	165	165	4	23

302A Bare Shaft (01: 80mm to 200mm, 02: 250mm to 600mm)

■302A 80mm～200mm
(High-Temperature Extension Bonnets)

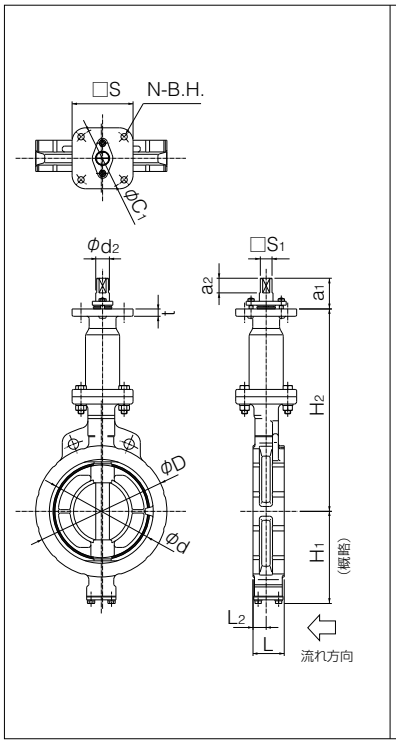

■302A 250mm～400mm
(High-Temperature Extension Bonnets)

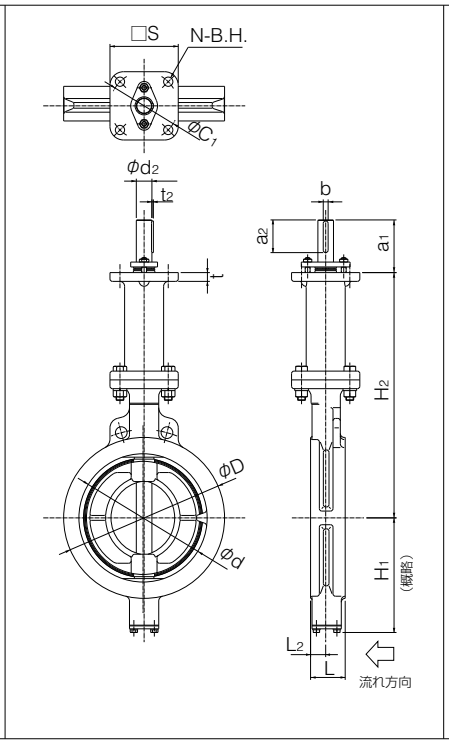

■302A 450mm～600mm
(High-Temperature Extension Bonnets)

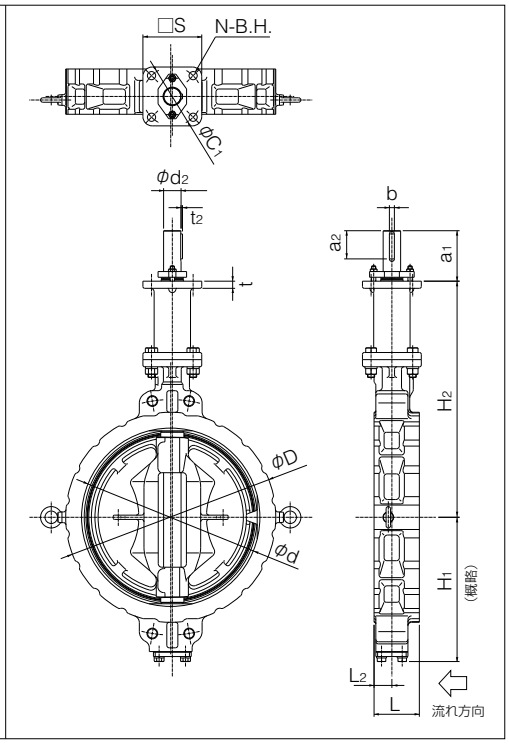

■400 to less than 600 degrees C (High-Temperature Extension Bonnets)

Stem shape	Nominal size		Dimension (mm)														Approx. Weight (kg)
	mm	inch	φd	φD	L	L2	H1	H2	a1	a2	□S1	φd2	b	t2	t	ISO 5211 Top Flange	
01	80	3	89	127	48	22	95	297	52.5	16.5	14	16	—	—	15	F10	10.3
	100	4	112	156	54	24	110	320	52.5	16.5	14	16	—	—	15	F10	11.5
	125	5	137	185	56	23	139	335	52.5	16.5	16	20	—	—	15	F10	14.7
	150	6	163	216	57	23.5	164	385	55.5	20	18	22	—	—	15	F12	20
	200	8	213	269	64	27	190	415	63	30	24	28	—	—	15	F12	27
02	250	10	263	330	71	31	236	503	108	67.3	—	32	10	3	18	F14	46
	300	12	315	381	81	35	246	530	113	72.3	—	35	10	3	18	F14	55
	350	14	350	416	92	39.5	308	560	113	72	—	38	10	3	18	F14	76
	400	16	400	475	102	39	348	592	113	72	—	42	12	3.5	18	F14	104
	450	18	450	534	114	43	366	626	141.5	68	—	45	12	3.5	20	F16	152
	500	20	500	589	127	50	405	662	141.5	79	—	49	14	4	20	F16	191
	600	24	600	693	154	64	461	713	141.5	80	—	59	16	5	20	F16	291

Stem shape	01 : square 02 : round with key

■Top Flange Dimension

ISO 5211 Top Flange	□S	φC1	N	B.H.
F10	102	102	4	11
F12	125	125	4	13
F14	140	140	4	19
F16	165	165	4	23

Lock Lever Type 302A-1T (80mm to 150mm)

■−29 to less than 250 degrees C

Nominal size		Dimension (mm)									Lever type	Approx. Weight (kg)
mm	inch	φd	φD	L	L_2	H_1	H_2	Category	H_3	W		
80	3	89	127	48	22	95	147	T_{10}, T_{20}	117	300	1T-2	7.1
100	4	112	156	54	24	110	170	T_{10}, T_{20}	117	300	1T-2	8.3
125	5	137	185	56	23	139	185	T_{10}, T_{20}	117	300	1T-2	11.4
150	6	163	216	57	23.5	164	205	T_{10}, T_{20}	125	350	1T-3	14.6

■250 to less than 400 degrees C

Nominal size		Dimension (mm)									Lever type	Approx. Weight (kg)
mm	inch	φd	φD	L	L_2	H_1	H_2	Category	H_3	W		
80	3	89	127	48	22	95	147	T_{10}, T_{20}	217	300	1T-2	9.7
100	4	112	156	54	24	110	170	T_{10}, T_{20}	217	300	1T-2	10.9
125	5	137	185	56	23	139	185	T_{10}, T_{20}	217	300	1T-2	14.2
150	6	163	216	57	23.5	164	205	T_{10}, T_{20}	297	350	1T-3	21.3

■400 to 600 degrees C

Nominal size		Dimension (mm)									Lever type	Approx. Weight (kg)
mm	inch	φd	φD	L	L_2	H_1	H_2	Category	H_3	W		
80	3	89	127	48	22	95	297	T_{10}	217	300	1T-2	15
100	4	112	156	54	24	110	320	T_{10}	217	300	1T-2	16.2
125	5	137	185	56	23	139	335	T_{10}	217	300	1T-2	19.6
150	6	163	216	57	23.5	164	385	T_{10}	297	350	1T-3	28.8

■302A-1T

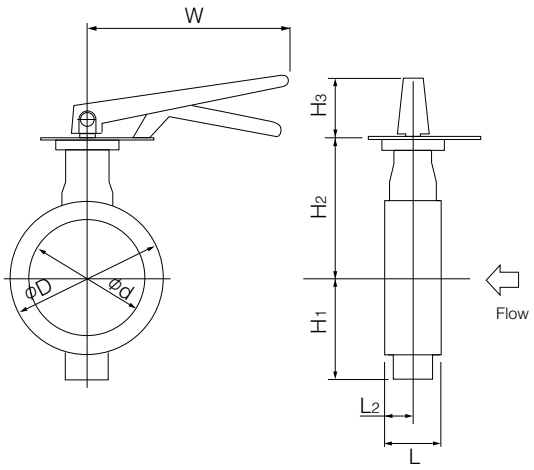

■302A-1T Actuator Mounting Finish by Temperature

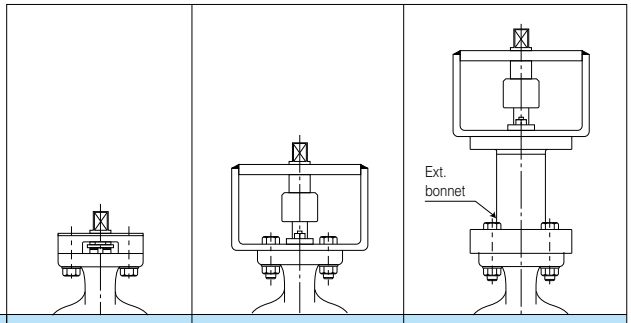

Temp.range		−29 to less than 250 degrees C	250 to less than 400 degrees C	400 to 600 degrees C
Body	80mm to 150mm	SCS14A SCPH2		SCS14A

■1T Installation Direction

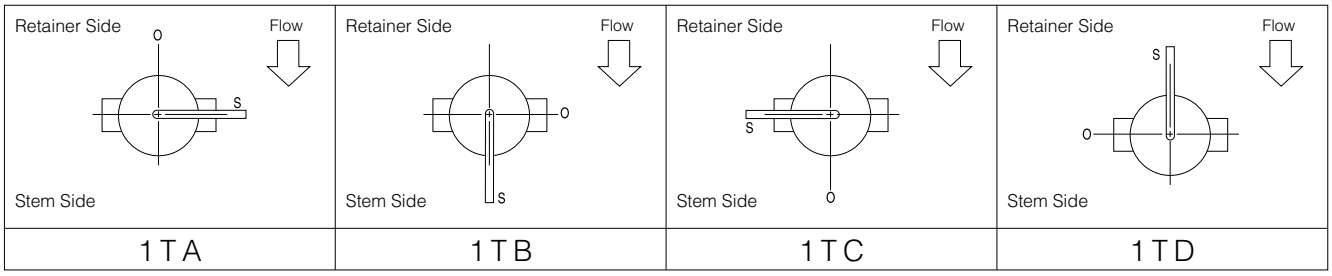

Worm Gear Type 302A-2U (80mm to 150m) / 302A-2S (200mm to 600mm)

■−29 to less than 250 degrees C

Nominal size		Dimension (mm)												Gear type	Approx. Weight (kg)
mm	inch	φd	φD	L	L_2	H_1	H_2	Category	H_3	E	K	F	φW		
80	3	89	127	48	22	95	147	T_{10},T_{20}	61	44	53	173.5	160	2U-2	7.9
100	4	112	156	54	24	110	170	T_{10},T_{20}	61	44	53	173.5	160	2U-2	9.1
125	5	137	185	56	23	139	185	T_{10},T_{20}	61	44	53	173.5	160	2U-2	12.4
150	6	163	216	57	23.5	164	205	T_{10},T_{20}	77.5	87.5	90	222.5	200	2U-4	29
200	8	213	269	64	27	190	235	T_{10},T_{20}	72	85	126	246	280	DGH-2	33
250	10	263	330	71	31	236	283	T_{10},T_{20}	97	117	164	335	355	DGH-3	62
300	12	315	381	81	35	246	310	T_{10},T_{20}	97	117	164	335	355	DGH-3	72
350	14	350	416	92	39.5	308	340	A,B,C	97	117	164	335	355	DGH-3	99
400	16	400	475	102	39	348	372	A	97	117	164	335	355	DGH-3	124
								B,C	215	140	198	402	450	DGH-4	162
450	18	450	534	114	43	366	406	A,B	127	140	198	402	450	DGH-4	198
								C	127	140	198	432	355	DGH-4+R/G5	200
500	20	500	589	127	50	405	442	A	127	140	198	402	450	DGH-4	236
								B,C	127	140	198	432	355	DGH-4+R/G5	238
600	24	600	693	154	64	461	493	A	127	140	198	432	355	DGH-4+R/G5	338
								B,C	245	185	264	497	355	DGH-4.5+R/G5	413

■250 to less than 400 degrees C

Nominal size		Dimension (mm)												Gear type	Approx. Weight (kg)
mm	inch	φd	φD	L	L_2	H_1	H_2	Category	H_3	E	K	F	φW		
80	3	89	127	48	22	95	147	T_{10},T_{20}	134.5	44	53	173.5	160	2U-2	10.5
100	4	112	156	54	24	110	170	T_{10},T_{20}	134.5	44	53	173.5	160	2U-2	11.7
125	5	137	185	56	23	139	185	T_{10},T_{20}	134.5	44	53	173.5	160	2U-2	17.2
150	6	163	216	57	23.5	164	205	T_{10},T_{20}	223	87.5	90	222.5	200	2U-4	35
200	8	213	269	64	27	190	235	T_{10},T_{20}	217	85	126	246	280	DGH-2	39
250	10	263	330	71	31	236	283	T_{10},T_{20}	205	117	164	335	355	DGH-3	75
300	12	315	381	81	35	246	310	T_{10},T_{20}	205	117	164	335	355	DGH-3	85
350	14	350	416	92	39.5	308	340	A , B	205	117	164	335	355	DGH-3	108
400	16	400	475	102	39	348	372	A	205	117	164	335	355	DGH-3	134
								B	215	140	198	402	450	DGH-4	162
450	18	450	534	114	43	366	406	A , B	245	140	198	402	450	DGH-4	212
500	20	500	589	127	50	405	442	A	245	140	198	402	450	DGH-4	250
								B	245	140	198	432	355	DGH-4+R/G5	252
600	24	600	693	154	64	461	493	A	245	140	198	432	355	DGH-4+R/G5	351
								B	245	185	264	497	355	DGH-4.5+R/G5	413

■2U/2S Installation Direction

Retainer Side / Flow 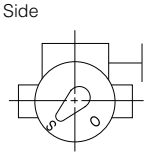 Stem Side	Retainer Side / Flow 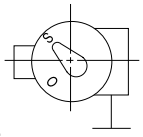 Stem Side	Retainer Side / Flow 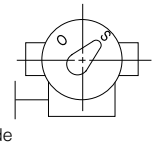 Stem Side	Retainer Side / Flow 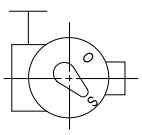 Stem Side
2UA/2SA	2UB/2SB	2UC/2SC	2UD/2SD

Worm Gear Type 302A-2U(80mm to 150m) / 302A-2S(200mm to 600mm)

■400 to 600 degrees C

Nominal size		Dimension (mm)												Gear type	Approx. Weight (kg)
mm	inch	φd	φD	L	L_2	H_1	H_2	Category	H_3	E	K	F	φW		
80	3	89	127	48	22	95	297	T_{10}	134.5	44	53	173.5	160	2U-2	16
100	4	112	156	54	24	110	320	T_{10}	134.5	44	53	173.5	160	2U-2	17.2
125	5	137	185	56	23	139	335	T_{10}	134.5	44	53	173.5	160	2U-2	22.7
150	6	163	216	57	23.5	164	385	T_{10}	223	87.5	90	222.5	200	2U-4	42.5
200	8	213	269	64	27	190	415	T_{10}	217	85	126	246	280	DGH-2	47
250	10	263	330	71	31	236	503	T_{10}	205	117	164	335	355	DGH-3	88
300	12	315	381	81	35	246	530	T_{10}	205	117	164	335	355	DGH-3	98
350	14	350	416	92	39.5	308	560	B	205	117	164	335	355	DGH-3	124
400	16	400	475	102	39	348	592	B	215	140	198	402	450	DGH-4	178
450	18	450	534	114	43	366	626	B	245	140	198	402	450	DGH-4	228
500	20	500	589	127	50	405	662	B	245	140	198	432	355	DGH-4+R/G5	270
600	24	600	693	154	64	461	713	B	245	185	264	497	355	DGH-4.5+R/G5	432

■302A-2U/2S

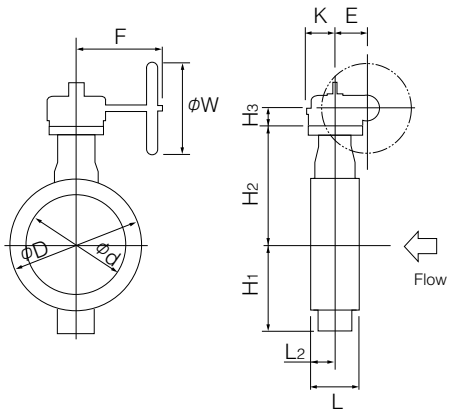

■302A-2U/2S Actuator Mounting Finish by Temperature

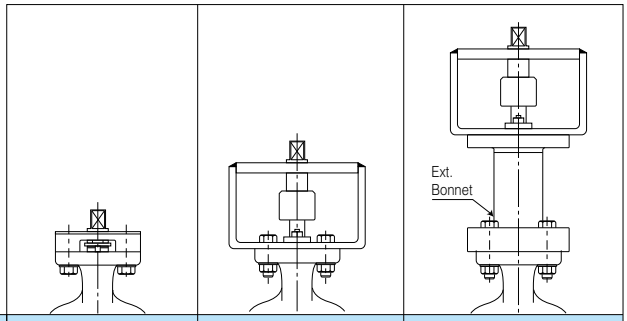

		−29 to less than 250 degrees C	250 to less than 400 degrees C	400 to 600 degrees C
Temp.range				
Body	80mm to 300mm	SCS14A SCPH2		SCS14A
	350mm to 600mm	SCS13A SCPH2		SCS13A

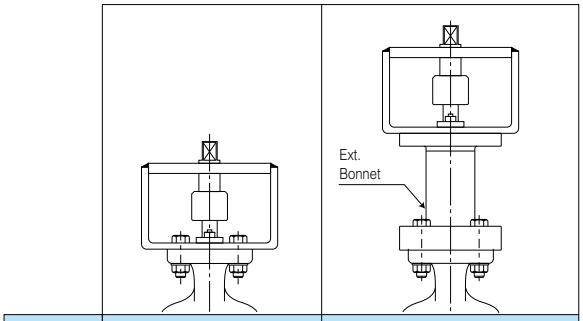

		−29 to less than 400 degrees C	400 to 600 degrees C
Temp.range			
Body	400mm (DGH-4) 600mm (DGH-4.5 +R/G5)	SCS13A SCPH2	SCS13A

Double-acting Pneumatic Cylinder Type 302A-7E (80mm to 300mm)

Less than 1.0 MPa

Nominal size		Dimension (mm)												Cylinder type	Approx. Weight (kg)
mm	inch	φd	φD	L	L_2	H_1	H_2	H_3	H_4	A	P	f_1	f_2		
80	3	89	127	48	22	95	147	168	26.5	276	142	75	47	T85	11
100	4	112	156	54	24	110	170	203	26.5	346	176	79	57	T200	16
125	5	137	185	56	23	139	185	203	26.5	346	176	79	57	T200	19
150	6	163	216	57	23.5	164	205	231	29.5	423	214	91	69	T380	29
200	8	213	269	64	27	190	235	269	29.5	546	270	118	85	T750	45
250	10	263	330	71	31	236	283	269	190	546	270	118	87.5	T750	73
300	12	315	381	81	35	246	310	269	190	546	270	118	87.5	T750	82

1.0 MPa to 2.0 MPa

Nominal size		Dimension (mm)												Cylinder type	Approx. Weight (kg)
mm	inch	φd	φD	L	L_2	H_1	H_2	H_3	H_4	A	P	f_1	f_2		
80	3	89	127	48	22	95	147	203	26.5	346	176	79	57	T200	12
100	4	112	156	54	24	110	170	203	26.5	346	176	79	57	T200	16
125	5	137	185	56	23	139	185	231	26.5	423	214	91	69	T380	20
150	6	163	216	57	23.5	164	205	231	29.5	423	214	91	69	T380	29
200	8	213	269	64	27	190	235	269	29.5	546	270	118	85	T750	45

■302A-7E

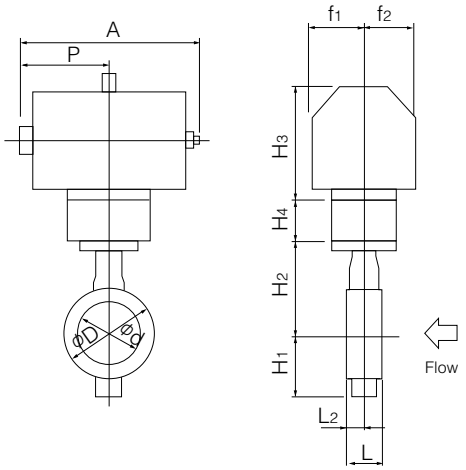

■302A-7E Actuator Mounting Finish by Temperature

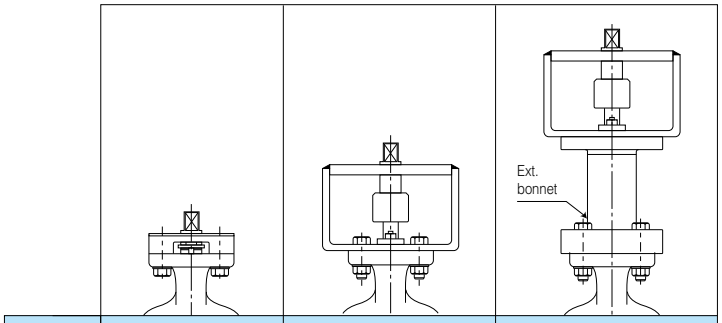

		−29 to less than 250 degrees C	250 to less than 400 degrees C	400 to 600 degrees C
Temp.range				
Body	80mm to 200mm	SCS14A SCPH2		SCS14A

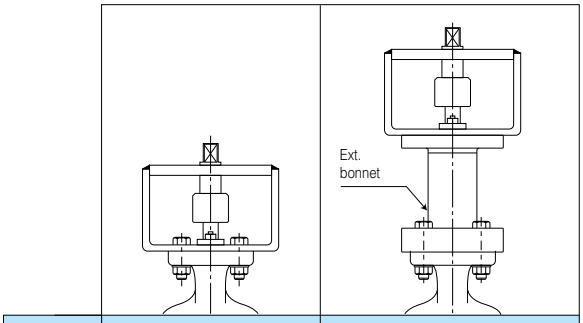

		−29 to less than 400 degrees C	400 to 600 degrees C
Temp.range			
Body	250mm 300mm	SCS14A SCPH2	SCS14A
	350mm	SCS13A SCPH2	

■7E Installation Direction

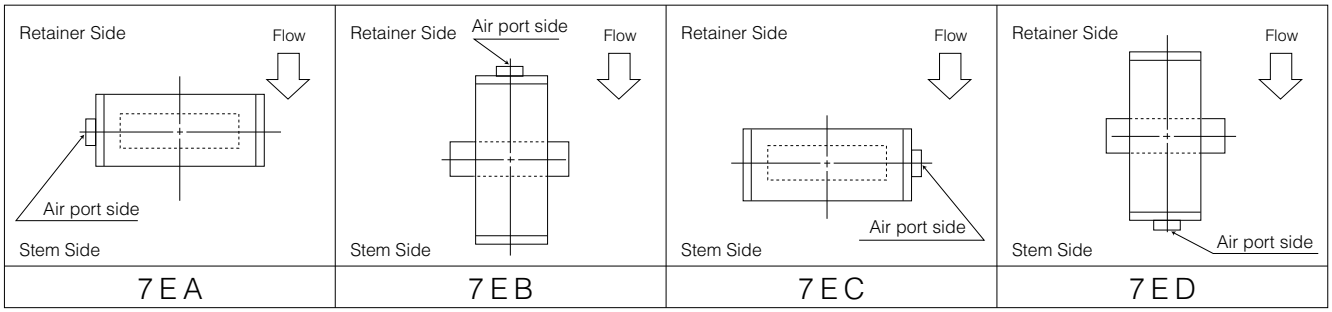

Double-acting Pneumatic Cylinder Type 302A-3A (250mm to 600mm)

■−29 to less than 400 degrees C

Nominal size		Dimension (mm)												Cylinder type	Approx. Weight (kg)
mm	inch	Φd	ΦD	L	L_2	H_1	H_2	Category	H_3	A	P	f_1	f_2		
250	10	263	330	71	31	236	283	T_{20}	424	743	381	100	164	TGA-125	79
300	12	315	381	81	35	246	310	T_{20}	424	743	381	100	164	TGA-125	88
350	14	350	416	92	39.5	308	340	A	424	743	381	100	164	TGA-125	110
								B , C	472	810	417	100	180	TGA-140	121
400	16	400	475	102	39	348	372	A , B	472	810	417	100	180	TGA-140	147
								C	510	939	483	130	202	TGA-160	214
450	18	450	534	114	43	366	406	A	502	810	417	100	180	TGA-140	207
								B , C	530	939	483	130	202	TGA-160	263
500	20	500	589	127	50	405	442	A	530	939	483	130	202	TGA-160	302
								B , C	543	1053	543	130	218	TGA-180	330
600	24	600	693	154	64	461	493	A	543	1053	543	130	218	TGA-180	431
								B	610	1163	599	160	253	TGA-200	475
								C	640	1248	642	160	270	TGA-220	535

■400 to 600 degrees C

Nominal size		Dimension (mm)												Cylinder type	Approx. Weight (kg)
mm	inch	Φd	ΦD	L	L_2	H_1	H_2	Category	H_3	A	P	f_1	f_2		
350	14	350	416	92	39.5	308	560	B	472	810	417	100	180	TGA-140	136
400	16	400	475	102	39	348	592	B	472	810	417	100	180	TGA-140	163
450	18	450	534	114	43	366	626	B	530	939	483	130	202	TGA-160	280
500	20	500	589	127	50	405	662	B	543	1053	543	130	218	TGA-180	348
600	24	600	693	154	64	461	713	B	610	1163	599	160	253	TGA-200	494

■302A-3A

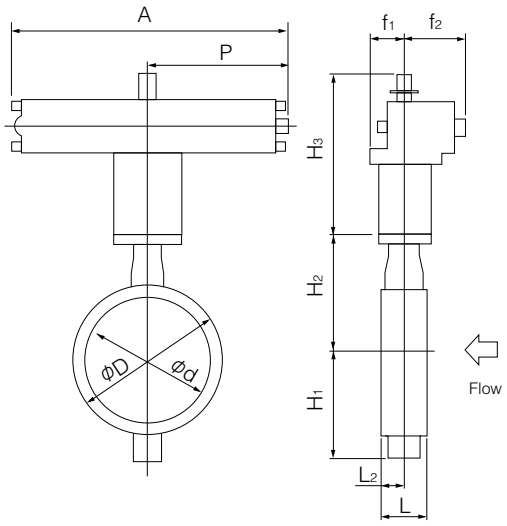

■302A-3A
Actuator Mounting Finish by Temperature

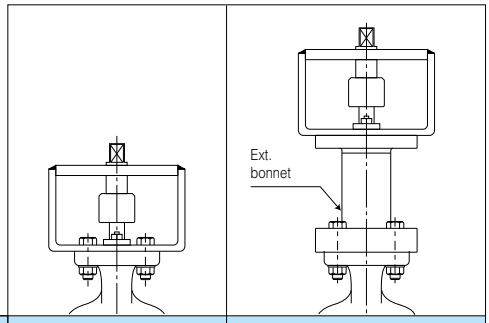

		−29 to less than 400 degrees C	400 to 600 degrees C
Temp.range			
Body	350mm to 600mm	SCS13A SCPH2	SCS13A

■3A Installation Direction

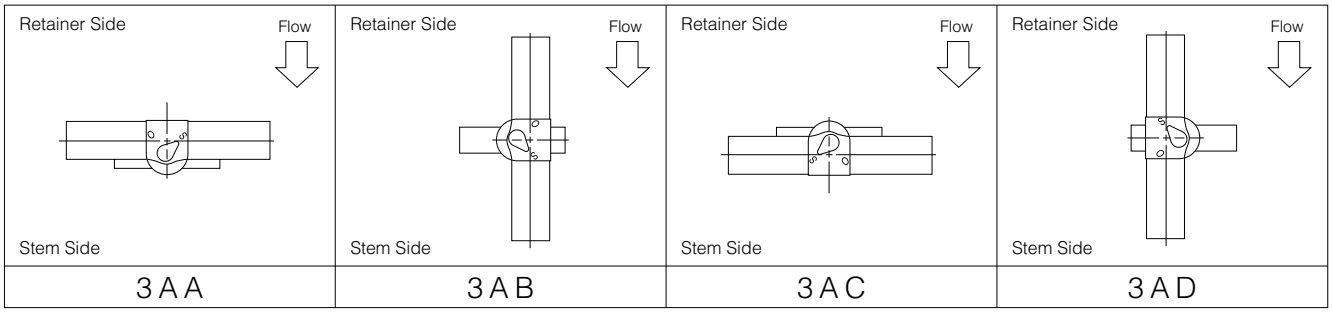

Single-acting Pneumatic Cylinder Type 302A-7G (Air to open: 80mm to 150mm) / 302A-7F (Air to close: 80mm to 150mm)

Less than 1.0 MPa

Nominal size		Dimension (mm)												Cylinder type	Approx. Weight (kg)
mm	inch	φd	φD	L	L_2	H_1	H_2	H_3	H_4	A	P	f_1	f_2		
80	3	89	127	48	22	95	147	203	26.5	449	226	79	57	T200S	17
100	4	112	156	54	24	110	170	231	26.5	550	276	91	69	T380S	27
125	5	137	185	56	23	139	185	269	26.5	723	360	118	85	T750S	43
150	6	163	216	57	23.5	164	205	269	29.5	723	360	118	85	T750S	47

1.0 MPa to 2.0 MPa

Nominal size		Dimension (mm)												Cylinder type	Approx. Weight (kg)
mm	inch	φd	φD	L	L_2	H_1	H_2	H_3	H_4	A	P	f_1	f_2		
80	3	89	127	48	22	95	147	231	26.5	550	276	91	69	T380S	26
100	4	112	156	54	24	110	170	269	26.5	723	360	118	85	T750S	40
125	5	137	185	56	23	139	185	269	26.5	723	360	118	85	T750S	43

■7F Installation Direction

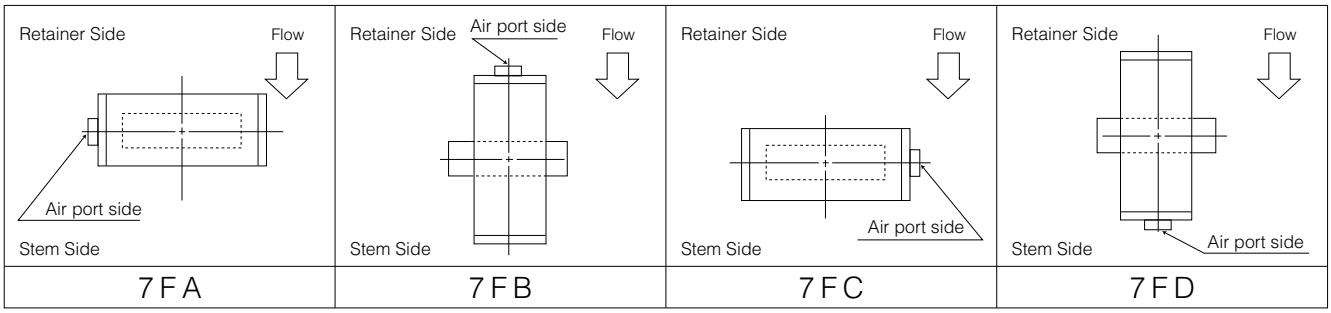

■302A-7F

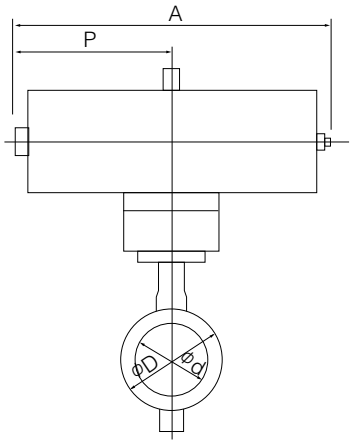

■302A-7G

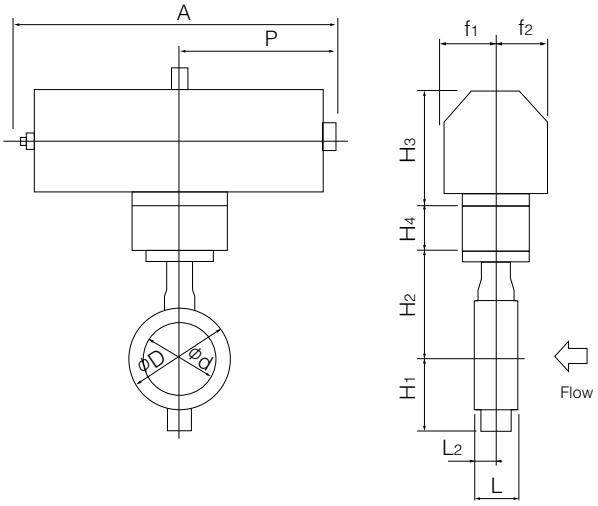

■302A-7F/7G Actuator Mounting Finish by Temperature

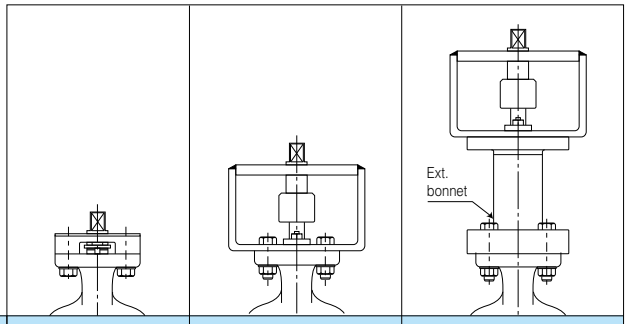

Temp.range	−29 to less than 250 degrees C	250 to less than 400 degrees C	400 to 600 degrees C
Body 80mm to 150mm	SCS14A SCPH2		SCS14A

■7G Installation Direction

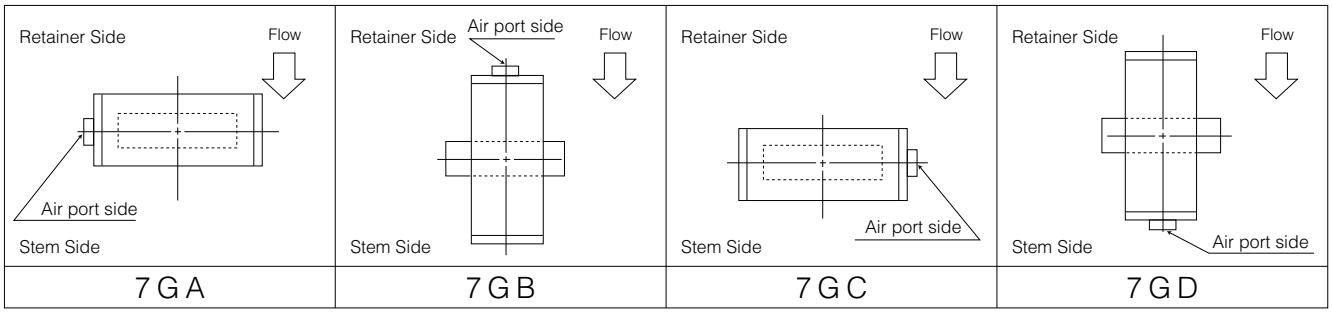

Single-acting Pneumatic Cylinder Type 302A-3U (Air to open: 150mm to 600mm) / 302A-3K (Air to close: 150mm to 600mm)

■−29 to 400 less than degrees C

Nominal size		Dimension (mm)												Cylinder type	Approx. Weight (kg)
mm	inch	Φd	ΦD	L	L_2	H_1	H_2	Category	H_3	A	P	f_1	f_2		
150	6	163	216	57	23.5	164	205	T_{20}	377	945	585	70	165	TG-10S	69
200	8	213	269	64	27	190	235	T_{10},T_{20}	377	1080	720	94	206	TG-12S	122
250	10	263	330	71	31	236	283	T_{10}	417	1080	720	94	206	TG-12S	141
								T_{20}	450	1255	865	131	257	TG-14S	237
300	12	315	381	81	35	246	310	T_{10}	417	1080	720	94	206	TG-12S	150
								T_{20}	450	1255	865	131	257	TG-14S	246
350	14	350	416	92	39.5	308	340	A	450	1255	865	131	257	TG-14S	264
								B,C	602	1655	1095	164	348	TG-20S	485
400	16	400	475	102	39	348	372	A	450	1255	865	131	257	TG-14S	292
								B,C	602	1655	1095	164	348	TG-20S	512
450	18	450	534	114	43	366	406	A,B,C	624	1655	1095	164	348	TG-20S	564
500	20	500	589	127	50	405	442	A,B	624	1655	1095	164	348	TG-20S	602
600	24	600	693	154	64	461	493	A	624	1655	1095	164	348	TG-20S	701

■400 to 600 degrees C

Nominal size		Dimension (mm)												Cylinder type	Approx. Weight (kg)
mm	inch	Φd	ΦD	L	L_2	H_1	H_2	Category	H_3	A	P	f_1	f_2		
200	8	213	269	64	27	190	415	T_{10}	377	1080	720	94	206	TG-12S	130
250	10	263	330	71	31	236	503	T_{10}	417	1080	720	94	206	TG-12S	154
300	12	315	381	81	35	246	530	T_{10}	417	1080	720	94	206	TG-12S	164
350	14	350	416	92	39.5	308	560	B	602	1655	1095	164	348	TG-20S	500
400	16	400	475	102	39	348	592	B	602	1655	1095	164	348	TG-20S	528
450	18	450	534	114	43	366	626	B	624	1655	1095	164	348	TG-20S	582
500	20	500	589	127	50	405	662	B	624	1655	1095	164	348	TG-20S	620

■3K Installation Direction

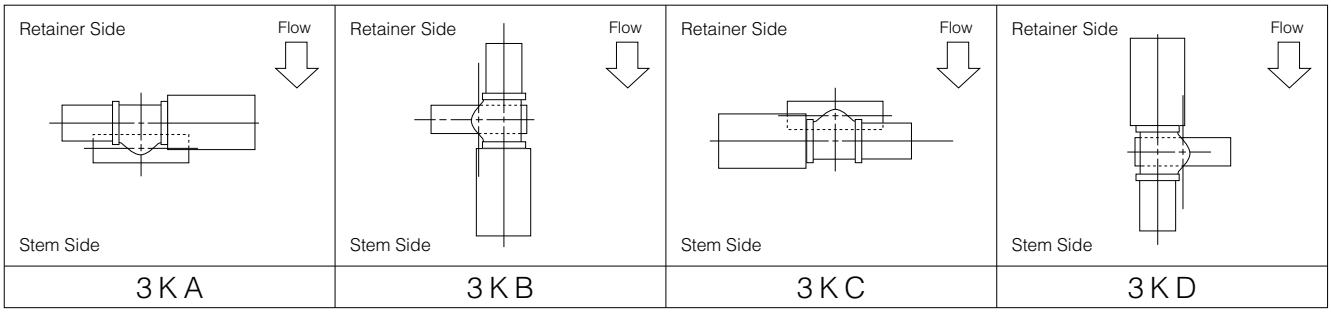

3KA	3KB	3KC	3KD

■302A-3K

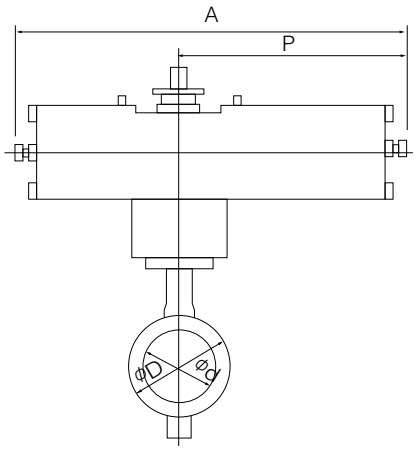

■302A-3U

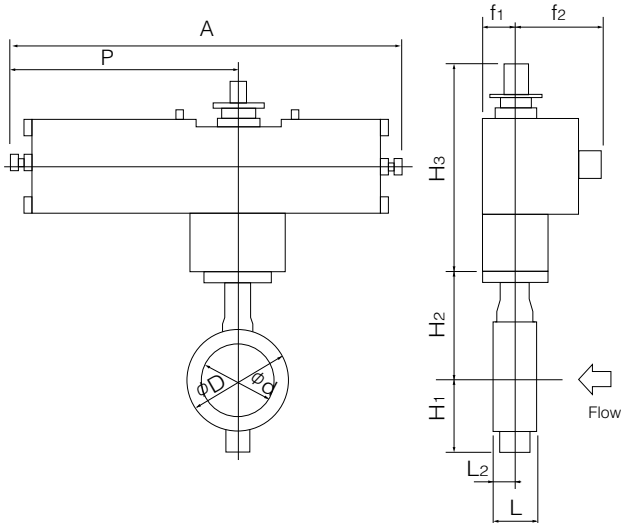

■302A 3U/3K Actuator Mounting Finish by Temperature

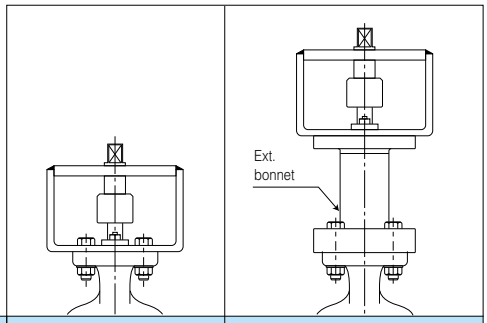

		−29 to less than 400 degrees C	400 to 600 degrees C
Temp.range			
Body	150mm to 300mm	SCS14A SCPH2	SCS14A
	350mm to 600mm	SCS13A SCPH2	SCS13A

■3U Installation Direction

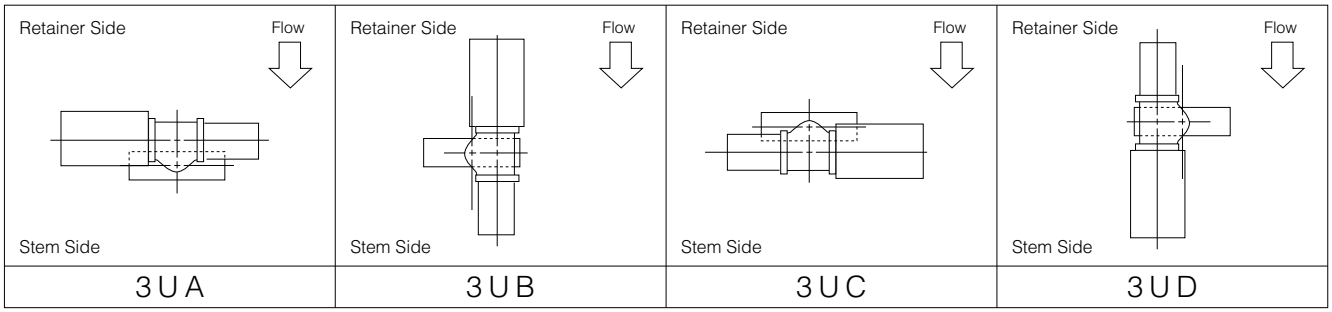

Single Phase Electric Motor Type 302A-4 I (80mm to 400mm)

■−29 to less than 400 degrees C

Nominal size		Dimension (mm)												Motor type	Approx. Weight (kg)
mm	inch	φd	φD	L	L_2	H_1	H_2	Category	H_3	A	P	F	K		
80	3	89	127	48	22	95	147	T_{10}	250	202	100	85	54	4 I-0	12.1
								T_{20}	265	252	138	126	65	4 I-1	14.3
100	4	112	156	54	24	110	170	T_{10}	265	252	138	126	65	4 I-1	15.5
								T_{20}	298	310	167	154	85	4 I-2	21.5
125	5	137	185	56	23	139	185	T_{10},T_{20}	298	310	167	154	85	4 I-2	24.5
150	6	163	216	57	23.5	164	205	T_{10}	373	310	167	154	85	4 I-2	29.5
								T_{20}	373	310	167	154	85	4 I-2.5	31
200	8	213	269	64	27	190	235	T_{10}	373	310	167	154	85	4 I-2.5	39
								T_{20}	405	388	223	246	136	4 I-3	49
250	10	263	330	71	31	236	283	T_{10},T_{20}	420	388	223	246	136	4 I-3	66
300	12	315	381	81	35	246	310	T_{10},T_{20}	420	388	223	246	136	4 I-3	75
350	14	350	416	92	39.5	308	340	A,B	423	388	223	246	136	4 I-4	96
400	16	400	475	102	39	348	372	A	423	388	223	246	136	4 I-4	123

■400 to 600 degrees C

Nominal size		Dimension (mm)												Motor type	Approx. Weight (kg)
mm	inch	φd	φD	L	L_2	H_1	H_2	Category	H_3	A	P	F	K		
80	3	89	127	48	22	95	297	T_{10}	250	202	100	85	54	4 I-0	17.6
100	4	112	156	54	24	110	320	T_{10}	265	252	138	126	65	4 I-1	21
125	5	137	185	56	23	139	335	T_{10}	298	310	167	154	85	4 I-2	30
150	6	163	216	57	23.5	164	385	T_{10}	373	310	167	154	85	4 I-2	37.5
200	8	213	269	64	27	190	415	T_{10}	373	310	167	154	85	4 I-2.5	47
250	10	263	330	71	31	236	503	T_{10}	420	388	223	246	136	4 I-3	79
300	12	315	381	81	35	246	530	T_{10}	420	388	223	246	136	4 I-3	88
350	14	350	416	92	39.5	308	560	B	423	388	223	246	136	4 I-4	138

■302A-4 I

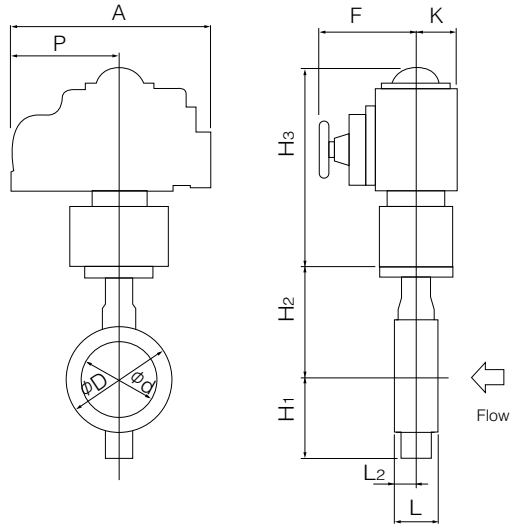

■302A-4 I
Actuator Mounting Finish by Temperature

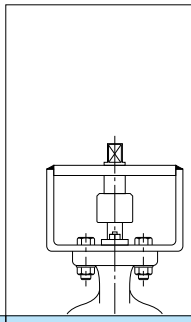

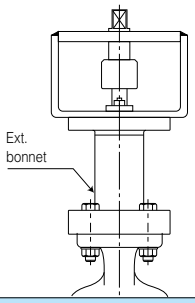

Temp.range		−29 to less than 400 degrees C	400 to 600 degrees C
Body	80mm to 300mm	SCS14A SCPH2	SCS14A
	350mm 400mm	SCS13A SCPH2	SCS13A

■4I Installation Direction

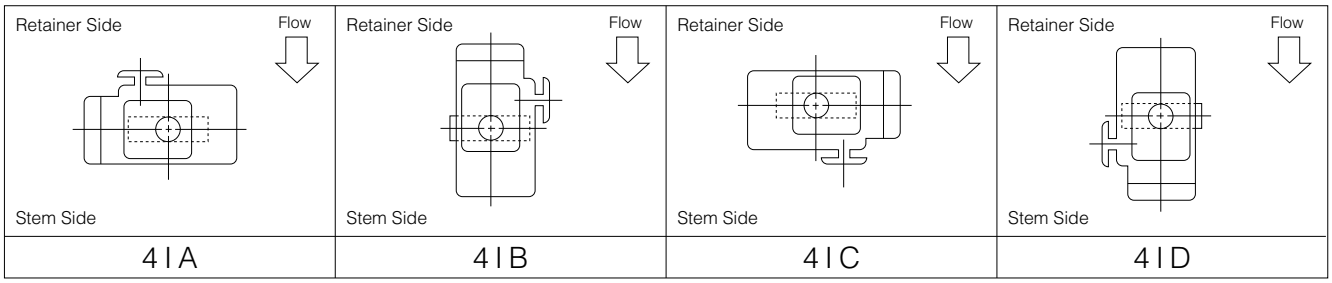

Three Phase Motor Actuator Type 302A-4L (250mm to 600mm)

■−29 to less than 400 degrees C

Nominal size		Dimension (mm)													Motor type	Approx. Weight (kg)
mm	inch	Φd	ΦD	L	L_2	H_1	H_2	Category	H_3	E	K	F	M	P		
250	10	263	330	71	31	236	283	T_{10}	547	117	164	533	357	230	LTKD-01 0.2kW/ DGH-3	125
300	12	315	381	81	35	246	310	T_{10},T_{20}	547	117	164	533	357	230	LTKD-01 0.2kW/ DGH-3	133
350	14	350	416	92	39.5	308	340	A,B	547	117	164	533	357	230	LTKD-01 0.2kW/ DGH-3	171
								C	592	140	198	593	373	230	LTKD-02 0.4kW/ DGH-4	221
400	16	400	475	102	39	348	372	A	547	117	164	533	357	230	LTKD-01 0.2kW/ DGH-3	197
								B	592	140	198	593	373	230	LTKD-02 0.4kW/ DGH-4	247
								C	592	140	198	593	400	230	LTKD-02 0.75kW/ DGH-4	258
450	18	450	534	114	43	366	406	A	642	140	198	593	373	230	LTKD-02 0.4kW/ DGH-4	308
								B,C	642	140	198	593	400	230	LTKD-02 0.75kW/ DGH-4	319
500	20	500	589	127	50	405	442	A,B,C	642	140	198	593	400	230	LTKD-02 0.75kW/ DGH-4	357
600	24	600	693	154	64	461	493	A	642	140	198	593	400	230	LTKD-02 0.75kW/ DGH-4	460
								B,C	749	210	300	748	477	360	LTKD-05 1.5kW/ DGH-5	605

■400 to 600 degrees C

Nominal size		Dimension (mm)													Motor type	Approx. Weight (kg)
mm	inch	Φd	ΦD	L	L_2	H_1	H_2	Category	H_3	E	K	F	M	P		
300	12	315	381	81	35	246	530	T_{10}	547	117	164	533	357	230	LTKD-01 0.2kW/ DGH-3	146
350	14	350	416	92	39.5	308	560	B	547	117	164	533	357	230	LTKD-01 0.2kW/ DGH-3	186
400	16	400	475	102	39	348	592	B	592	140	198	593	373	230	LTKD-02 0.4kW/ DGH-4	263
450	18	450	534	114	43	366	626	B	642	140	198	593	400	230	LTKD-02 0.75kW/ DGH-4	336
500	20	500	589	127	50	405	662	B	642	140	198	593	400	230	LTKD-02 0.75kW/ DGH-4	375
600	24	600	693	154	64	461	713	B	749	210	300	748	477	360	LTKD-05 1.5kW/ DGH-5	625

■302A-4L

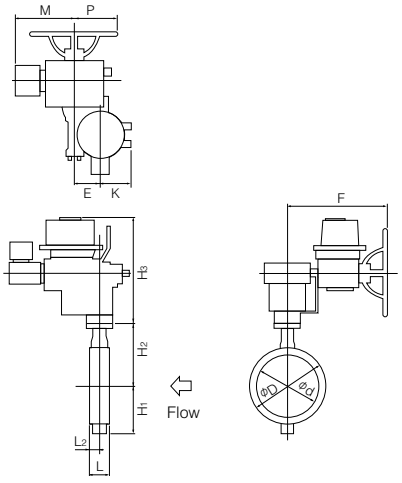

■302A-4L Actuator Mounting Finish by Temperature

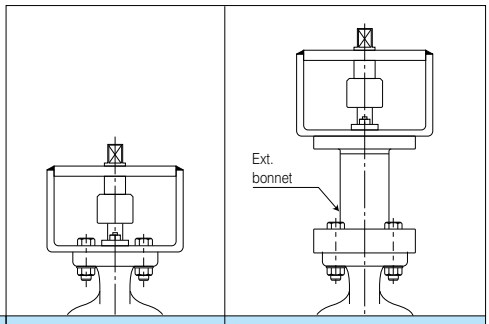

Temp.range		−29 to less than 400 degrees C	400 to 600 degrees C
Body	250mm 300mm	SCS14A SCPH2	SCS14A
	350mm to 600mm	SCS13A SCPH2	SCS13A

■4L Installation Direction

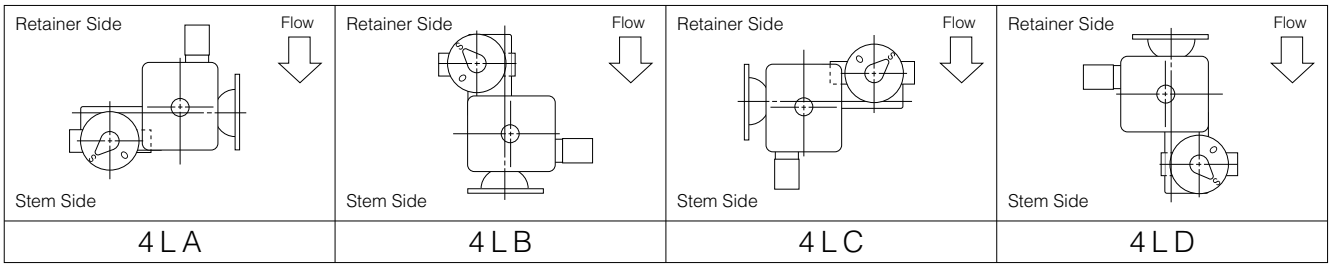

302A Cv value/pressure loss coefficient

●Cv value

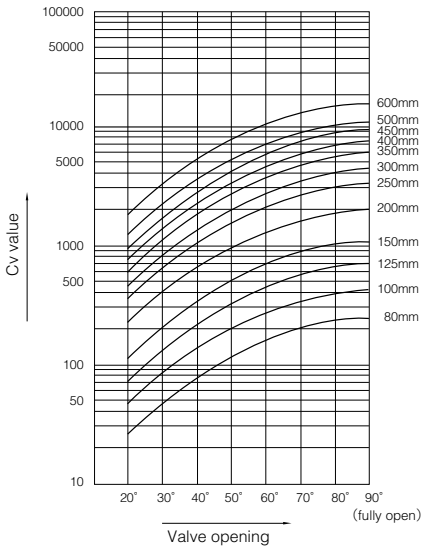

●Pressure loss coefficient

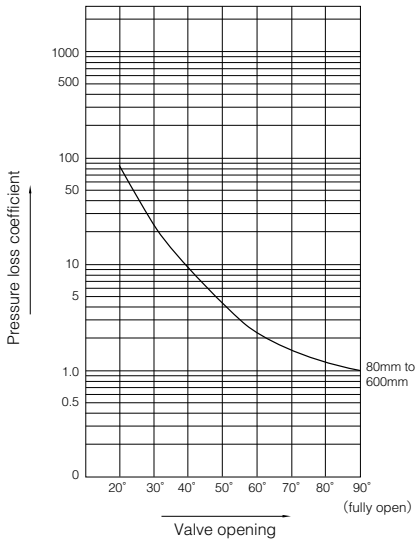

302A Cv value

Nominal size		Valve opening							
mm	inch	20°	30°	40°	50°	60°	70°	80°	90°
80	3	29	52	85	122	162	207	243	252
100	4	49	88	144	207	279	351	414	432
125	5	77	140	230	333	441	549	648	684
150	6	126	225	369	531	720	900	1080	1116
200	8	234	423	693	990	1350	1710	1980	2070
250	10	390	703	1148	1648	2240	2857	3300	3443
300	12	492	888	1454	2081	2838	3612	4172	4354
350	14	648	1170	1915	2741	3739	4758	5496	5736
400	16	829	1496	2449	3505	4780	6084	7027	7334
450	18	1041	1879	3076	4403	6004	7642	8827	9212
500	20	1323	2387	3909	5595	7630	9710	11216	11705
600	24	1929	3481	5700	8159	11126	14161	16356	17070

302A Pressure loss coefficent

Nominal size		Valve opening							
mm	inch	20°	30°	40°	50°	60°	70°	80°	90°
80	3	95	29	11	5	3	2	1	1
100	4	98	30	11	5	3	2	1	1
125	5	93	28	10	5	3	2	1	1
150	6	70	22	8	4	2	1	1	1
200	8	62	19	7	3	2	1	1	1
250	10	54	17	6	3	2	1	1	1
300	12	70	21	8	4	2	1	1	1
350	14	68	21	8	4	2	1	1	1
400	16	73	22	8	4	2	1	1	1
450	18	75	23	9	4	2	1	1	1
500	20	72	22	8	4	2	1	1	1
600	24	70	22	8	4	2	1	1	1

302A Applicable flange standard

Nominal size		JIS				ANSI/API/JPI	BS4504		DIN		BS10
mm	inch	5K	10K	16K	20K	150Lb	PN10	PN16	NP10	NP16	Table E
80	3	×	D	D	D	○	D	D	D	D	×
100	4	×	D	D	D	D	D	D	D	D	×
125	5	×	D	D	D	D	D	D	D	D	×
150	6	×	D	D	D	D	D	D	D	D	×
200	8	×	D	D	D	D	D	D	D	D	×
250	10	×	D	D	D	D	D	D	D	D	×
300	12	×	D	D	D	D	D	D	D	D	×
350	14	D	D	D	D	D	D	D	D	D	D
400	16	D	D	D	D	D	D	D	D	D	D
450	18	D	T	T	T	D	T	T	T	T	D
500	20	T	T	T	T	T	T	T	T	T	T
600	24	T	T	T	T	T	T	T	T	T	T

○ : Can be used without flange drilling.
D : With flange drilling
T : With flange tapping
× : Not applicable

302A Applicable Pipe List in Case of A

Nominal size		SGP		Sch20		Sch40		Sch60		Sch80		Sch10S		Sch20S		Minimum internal diameters of piping (mm)
mm	inch	Retainer (up stream)	Stem Side (down stream)	Retainer (up stream)	Stem Side (down stream)	Retainer (up stream)	Stem Side (down stream)	Retainer (up stream)	Stem Side (down stream)	Retainer (up stream)	Stem Side (down stream)	Retainer (up stream)	Stem Side (down stream)	Retainer (up stream)	Stem Side (down stream)	
80	3	○	○	○	○	○	○	○	○	○	○	○	○	○	○	72.5
100	4	○	○	○	○	○	○	○	○	○	○	○	○	○	○	93.8
125	5	○	○	○	○	○	○	○	○	○	○	○	○	○	○	119.4
150	6	○	○	○	○	○	○	○	×	○	×	○	○	○	○	147.5
200	8	○	○	○	○	○	○	○	×	○	×	○	○	○	○	197.5
250	10	○	○	○	○	○	○	○	×	○	×	○	○	○	○	248.1
300	12	○	○	○	○	○	○	○	×	×	×	○	○	○	○	297.6
350	14	○	○	○	○	○	○	○	×	×	×	–	–	–	–	330.0
400	16	○	○	○	○	○	○	○	×	○	×	–	–	–	–	377.0
450	18	○	○	○	○	○	○	○	×	○	×	–	–	–	–	424.0
500	20	○	○	○	○	○	○	○	×	○	×	–	–	–	–	470.0
600	24	–	–	○	○	○	○	○	×	×	×	–	–	–	–	564.0

302A Applicable Pipe List in Case of B

Nominal size		SGP		Sch20		Sch40		Sch60		Sch80		Sch10S		Sch20S	
mm	inch	Retainer (up stream)	Stem Side (down stream)	Retainer (up stream)	Stem Side (down stream)	Retainer (up stream)	Stem Side (down stream)	Retainer (up stream)	Stem Side (down stream)	Retainer (up stream)	Stem Side (down stream)	Retainer (up stream)	Stem Side (down stream)	Retainer (up stream)	Stem Side (down stream)
80	3	○	○	○	○	○	○	○	○	○	○	○	○	○	○
100	4	○	○	○	○	○	○	○	○	○	○	○	○	○	○
125	5	○	○	○	○	○	○	○	○	○	○	○	○	○	○
150	6	○	○	○	○	○	○	○	○	○	○	○	○	○	○
200	8	○	○	○	○	○	○	○	×	○	×	○	○	○	○
250	10	○	○	○	○	○	○	○	×	○	×	○	○	○	○
300	12	○	○	○	○	○	○	○	×	○	×	○	○	○	○
350	14	○	○	○	○	○	○	○	×	○	×	–	–	–	–
400	16	○	○	○	○	○	○	○	×	○	×	–	–	–	–
450	18	○	○	○	○	○	○	○	×	○	×	–	–	–	–
500	20	○	○	○	○	○	○	○	×	○	×	–	–	–	–
600	24	–	–	○	○	○	○	○	×	○	×	–	–	–	–

Remark 1: ○=Applicable ×=Not applicable
Remark 2: The clearance between the disc and the pipe is based on API 609 and MSS SP-67.
80mm to 150mm: 1.5mm; 200mm to 500mm: 3.0mm, and 600mm: 6.4mm
Remark 3: Butterfly valves are inserted into a pipe that was fitted with the disc when fully open.
In cases where there is an "X" in the chart above or you are using a pipe or flange that is less than the minimum inner pipe diameter, use is still possible if means are taken such as inserting a spacer between the valve and flange. For details, please consult us.

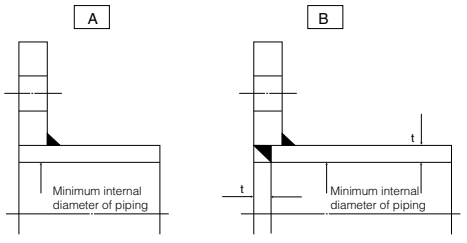

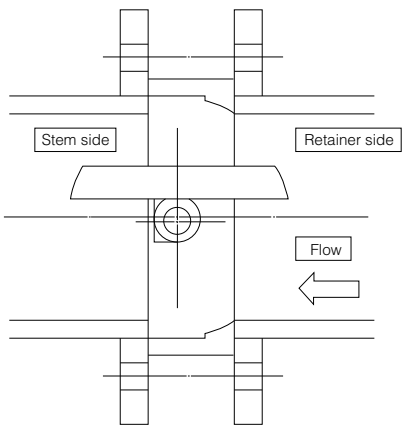

302A Piping gasket

●In case of sheet gasket ..... Any standard can be used.
●In case of spiral gasket
For API, JPI, ANSI flange ..... Any standard gaskets with inner/outer ring can be used.
For JIS flange ..... Use special spiral gasket shown below.

■Special spiral gasket for JIS flange size

Nominal size		JIS flange					
		5K, 10K, 16K, 20K			5K	10K	16K, 20K
mm	inch	D_1	D_2	D_3	D_4	D_4	D_4
80	3	89	97	120	×	134	140
100	4	115	124	145	×	159	165
125	5	140	151	177	×	190	202
150	6	166	178	205	×	220	237
200	8	217	227	256	×	270	282
250	10	268	278	315	×	332	354
300	12	319	331	362	×	377	404
350	14	356	369	399	412	422	450
400	16	406	420	457	472	484	508
450	18	458	472	517	532	539	573
500	20	508	532	567	582	594	628
600	24	610	626	672	689	700	734

Remark; ×: Not applicable

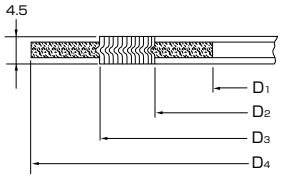

■Applicable standard for spiral gasket

Nominal size		Tomoe special			Standard gasket		
mm	inch	JIS 10K	JIS 16K JIS 20K	ANSI 125/150Lb	JIS 10K	JIS 16K JIS 20K	ANSI 125/150Lb
80	3	○	○	○	×	×	○
100	4	○	○	○	×	×	○
125	5	○	○	○	×	×	○
150	6	○	○	○	×	×	○
200	8	○	○	○	×	×	○
250	10	○	○	○	×	×	○
300	12	○	○	○	×	×	○
350	14	○	○	○	×	×	○
400	16	○	○	○	×	×	○
450	18	○	○	○	×	×	○
500	20	○	○	○	×	×	○
600	24	○	○	○	×	×	○

Remark 1: ○: Applicable, ×: Not applicable
Remark 2: In case a minute leakage of gas (less than 100PPm) becomes a problem, please inquire of our business charge.

302A Applicable standard for standard piping gasket

Nominal size		Max.allowable inside diameter (D)	Joint sheet or RPTFE solid gasket (t≦2mm)					PTFE mold type gasket VALQUA or NICHIAS				
mm	inch		JIS 5K	JIS 10K	JIS 16K JIS 20K	ANSI 125/150Lb	JPI 150Lb	JIS 5K	JIS 10K	JIS 16K JIS 20K	ANSI 125/150Lb	JPI 150Lb
80	3	97	×	○	○	○	○	×	○	○	○	○
100	4	124	×	○	○	○	○	×	○	○	○	○
125	5	151	×	○	○	○	○	×	○	○	○	○
150	6	178	×	○	○	○	○	×	○	○	○	○
200	8	227	×	○	○	○	○	×	○	○	○	○
250	10	282	×	○	○	○	○	×	○	○	○	○
300	12	331	×	○	○	○	○	×	○	○	○	○
350	14	362	○	○	○	○	○	○	○	○	○	○
400	16	414	○	○	○	○	○	○	○	○	○	○
450	18	468	○	○	○	○	○	○	○	○	○	○
500	20	518	○	○	○	○	○	○	○	○	○	○
600	24	619	○	○	○	○	○	○	○	○	○	○

Remark; ○: Applicable, ×: Not applicable

302A Piping Bolts and Nuts Sizes

Nominal size		JIS5K		JIS10K		JIS16K	
mm	inch	Long Bolts and Nuts	Setting Bolts	Long Bolts and Nuts	Setting Bolts	Long Bolts and Nuts	Setting Bolts
80	3	—	—	8-M16×145	—	8-M20×170	—
100	4	—	—	8-M16×145	—	8-M20×170	—
125	5	—	—	8-M20×170	—	8-M22×190	—
150	6	—	—	8-M20×170	—	12-M22×190	—
200	8	—	—	12-M20×170	—	12-M22×190	—
250	10	—	—	12-M22×190	—	12-M24×210	—
300	12	—	—	16-M22×190	—	16-M24×225	—
350	14	12-M22×210	—	16-M22×210	—	16-M30(P3)×245	—
400	16	16-M22×220	—	16-M24×235	—	16-M30(P3)×265	—
450	18	16-M22×230	※1	16-M24×250	4-M24×84×60	16-M30(P3)×280	4-M30(P3)× 95×65
					4-M24×58×50		4-M30(P3)× 73×50
500	20	16-M22×245	4-M22×80×50	16-M24×260	4-M24×90×60	16-M30(P3)×300	4-M30(P3)×105×65
			4-M22×60×50		4-M24×70×60		4-M30(P3)× 81×50
600	24	16-M24×280	4-M24×84×60	20-M30(P3)×300	4-M30(P3)×81×50	20-M36(P3)×345	4-M36(P3)×100×60
			4-M24×65×50		4-M30(P3)×65×50		4-M36(P3)× 82×50

Nominal size		JIS20K		ANSI150Lb, API/JPI150Lb	
mm	inch	Long Bolts and Nuts	Setting Bolts	Long Bolts and Nuts	Setting Bolts
80	3	8-M20×170	—	4-U5/8-11UNC×155	—
100	4	8-M20×170	—	8-U5/8-11UNC×155	—
125	5	8-M22×190	—	8-U3/4-10UNC×175	—
150	6	12-M22×190	—	8-U3/4-10UNC×175	—
200	8	12-M22×190	—	8-U3/4-10UNC×205	—
250	10	12-M24×210	—	12-U7/8- 9UNC×215	—
300	12	16-M24×225	—	12-U7/8- 9UNC×215	—
350	14	16-M30(P3)×260	—	12-U1 - 8UNC×240	—
400	16	16-M30(P3)×280	—	16-U1 - 8UNC×255	—
450	18	16-M30(P3)×300	4-M30(P3)×105×65	16-U1 1/8- 8UN×280	—
			4-M30(P3)× 81×50		
500	20	16-M30(P3)×315	4-M30(P3)×110×60	16-U1 1/8- 8UN×295	4-U1 1/8- 8UN×105×50
			4-M30(P3)× 90×65		4-U1 1/8- 8UN× 80×50
600	24	20-M36(P3)×360	4-M36(P3)×108×60	16-U1 1/4- 8UN×340	4-U1 1/4- 8UN×100×50
			4-M36(P3)× 90×50		4-U1 1/4- 8UN× 90×50

※1 Flange tapping is applicable, Please consult us for the further information.

Remark: Use SNB 7/S45C (A193 B7/A, 194 2H) SUS304/SUS304
For long bolt, use full thread bolt.
For hexagon nut, use heavy nut.
A metric screw should have 3 pitches if its nominal diameter exceeds M30.
A unified screw should have 8 threads per inch if its nominal diameter exceeds 1 inch.
Hexagon bolts (set bolts) are indicated with the retainer side on the up side and the stem side on down side.

Examples

Long bolts: 12 - M22 × 185
(N, M, L)

Setting bolts: 4 - M30 × 95 × 65
(Hexagon bolts)
(N, M, L, S)

Long bolts and nuts (full thread)

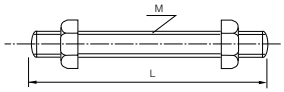

Setting bolts (Hexagon bolts)

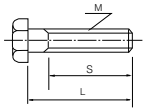

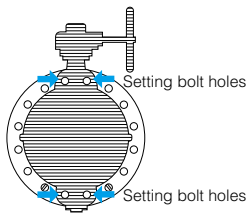

High Performance Butterfly Valves to Suit API Standard 150 lb Rating

Tom Disco®

304A Wafer

304Q Lugged



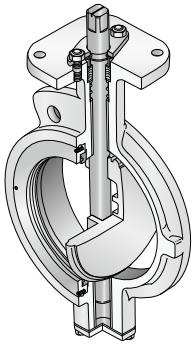

80mm to 300mm

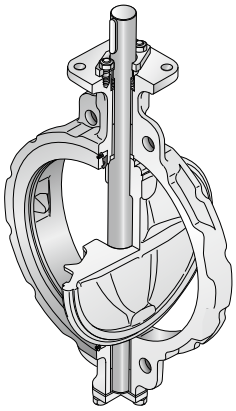

350mm to 600mm



Lock Lever



Worm Gear

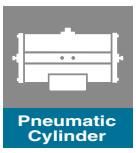

Pneumatic Cylinder

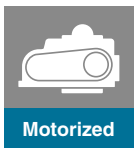

Motorized

Features and Benefits

Unique stopper structure

For the 80 to 300mm models, automatic aligning and disc overrun prevention are ensured by the special spherical design of the inner surface of the body disc hub edge. As for the 350 to 600mm models, a spacer ring is provided between the mating surfaces of the disc hub edge and inner surface of the body for disc alignment.
Disc overrun is prevented by a protrusion on the inner surface of the body.

Double eccentric geometry

The axis of disc rotation is double offset to the seat ring. When the disc rotates, it unseats at a small turning angle by its cam effect. The design exhibits tight shut-off, reduced torques, chemical resistance, excellent throttling capabilities and the ability to operate with relatively high pressure drops. It also prevents seat abrasion and provides reliable sealing performance over long periods.

Bi-directional flow

Seals flow in both directions. The valves can be used even if the flow changes direction. (There are pressure limitations for each direction of flow. See chart for recommended specifications).

Easy replacement of the seat ring

The ball lock method is used to simplify replacement of the seat ring.

General Description

Designed to suit those severe conditions such as high temperature, high pressure or high velocity, which disallow the use of soft resilient seated butterfly valves.
Ideal for use in chemical processes and applications with low pressure steam and high temperature gas.

Seat Structure

80mm to 300mm

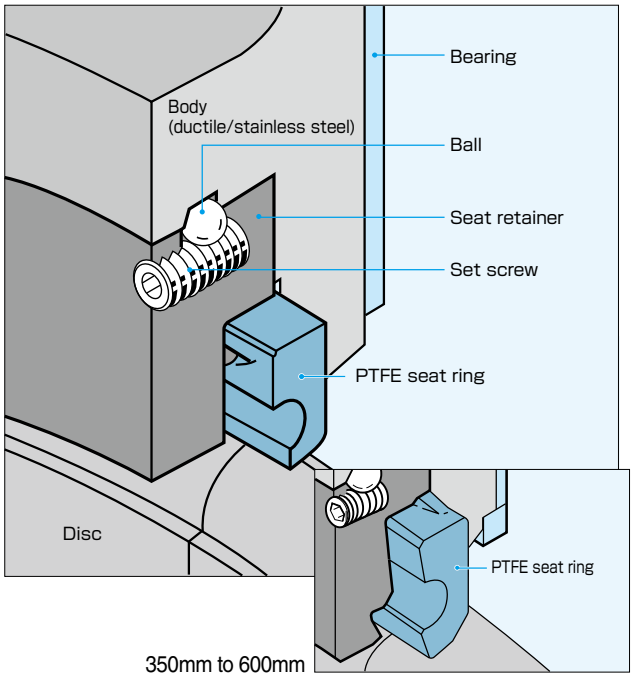

350mm to 600mm

Standard Specifications

Valve nominal size		80mm to 300mm		350mm to 600mm (5 sizes)	
Face-to-face dimensions		API 609 (class 150)		API 609 (class 150) ISO 5752 (25 series), JIS B 2002 (47 series)	
Connection		Wafer type / Lugged type			
Pressure rating		ANSI B16.34 Class 150lb (Seat rating is designed to suit APII 609 150lb above zero degree C			
Applicable flange standard		JIS 10K/16K/20K, ANSI 125/150lb, BS 10 Table F, BS 4504 PN 10/16, DIN NP 10/16		JIS 10K/16K/20K, ANSI 125/150lb, BS 10 Table F, BS 4504 PN 10/16, DIN NP 10/16	
Body shell test		Max. 3.2MPa as per API 598			
Seat leak test		Max. 2.3MPa as per API 598. Low pressure closure test is available upon request.			
Max. working pressure※1		2.0MPa			
		Bi-directional flow (Flow to disc side is recommended.)			
		Max. working pressure at reverse flow for 250mm and 300mm is 1.6MPa.		Max.working pressure at reverse flow is 1.0MPa.	
Working temperature range		–29 to 232 degrees C (RPTFE)		–20 to 232 degrees C (RPTFE)	
Seat leakage		–20 to 200 degrees C (White PTFE as option)			
		ISO 5208 rate A, API 598-1996			
Standard materials※2	Body	SCPH2/WCB	SCS 14A/CF8M	SCPH 2/WCB	SCS 13A/CF8
	Disc	SCS 13A/CF8 (Hard chrome plating)	SCS 16A/CF3M (Hard chrome plating)	SCS13A/CF8 (Hard chrome plating)	
	Stem	SUS 420 J2	SUS 329 J1 SUS 316 L SUS 329 J4 L	SUS 420 J2 (Under 1.0MPa) SUS 630 (Over 1.0MPa)	SUS 304 (Under 1.0MPa) SUS 630 (Over 1.0MPa)
	Seat ring	RPTFE as standard, White PTFE as an option			
	Gland packing	RPTFE			
Top flange		ISO 5211			
Bonnet type		Open bonnet			
Actuators	Lock lever	80 to 150mm			
	Worm gear	80 to 600mm			
	Pneumatic cylinder				
	Motorized				
Coating		Silicon resin coating (grey N7) for less than 200 degrees C. Heat resistant silver coating for 200 degrees C and over. No painting for stainless steel.			

※1 Please consult us if the pressure exceeds 1.6MPa.
※2 Please refer to the pressure rating chart and stem material chart in the following pages.

※It is possible that seat leakage occur when fluid (e.g. powder and/or liquid) is solidified by working temperature and other cause. Consult us.
Please note that use with vertical line such as bottom area of discharge spout of hopper, and tank.

304A Expanded view of components

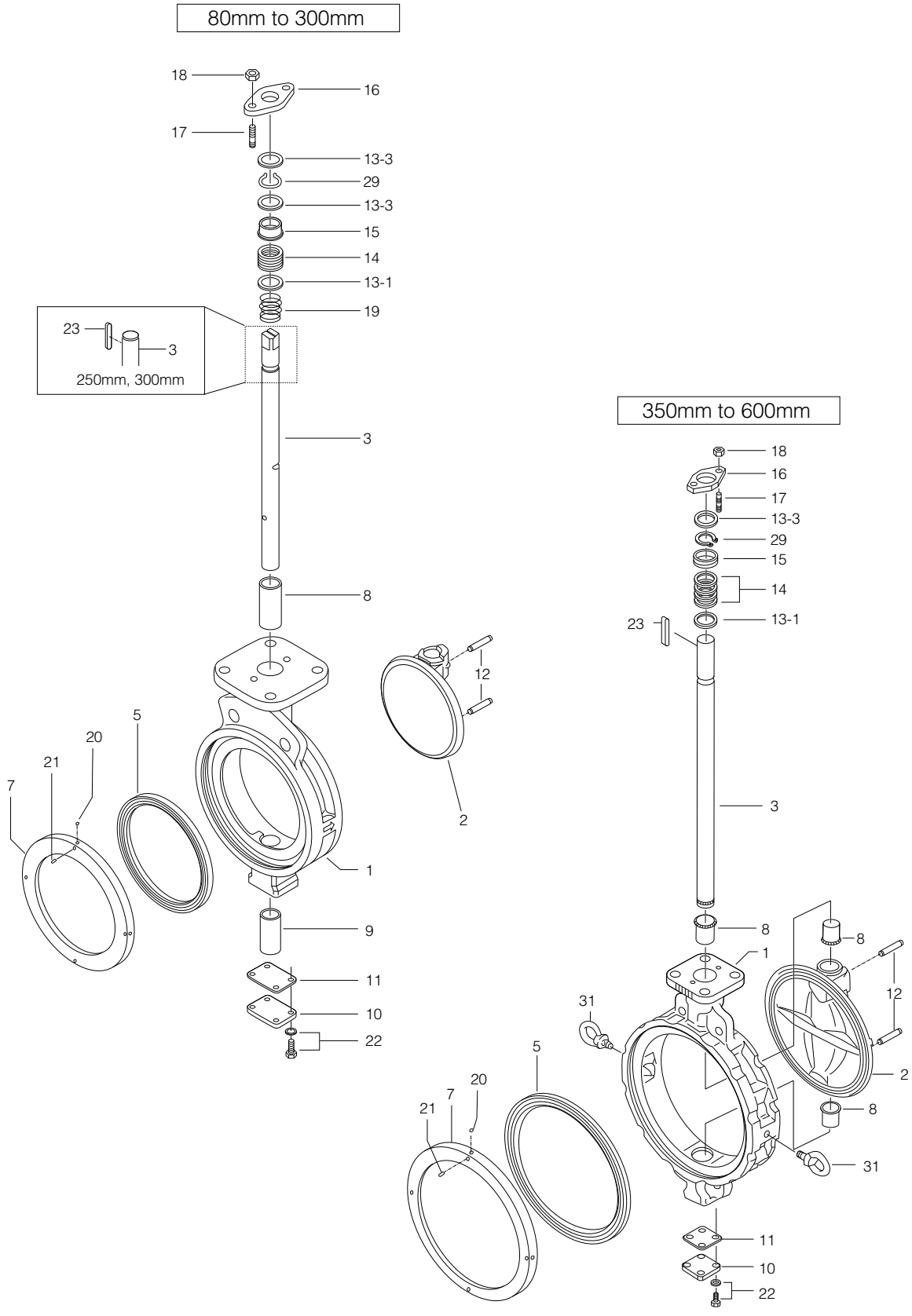

■304A Parts List（80mm to 300mm）

No.	Description	Q'ty	Remarks
1	Body	1	
2	Disc	1	
3	Stem	1	
★ 5	Seat ring	1	
7	Seat ring retainer	1	
8	Top shaft bearing	1	
9	Bottom shaft bearing	1	
10	Bottom cover	1	
★ 11	Bottom gasket	1	
12	Taper pin	2	
13-1	Packing retainer	1	
13-3	Ring	2	
★ 14	Gland packing	1 set	
15	Gland bush	1	
16	Gland flange	1	
17	Gland bolt	2	
18	Gland nut	2	
19	Gland coil	1	Only 80mm to 150mm
★ 20	Ball	2	80mm to 125mm
		4	150mm to 300mm
★ 21	Set screw	2	80mm to 125mm
		4	150mm to 300mm
22	Hexagon bolt, Spring washer	4 sets	
23	Stem key	1	Only 250mm, 300mm
29	C-ring	1	

■304A Parts List（350mm to 600mm）

No.	Description	Q'ty	Remarks
1	Body	1	
2	Disc	1	
3	Stem	1	
★ 5	Seat ring	1	
7	Seat ring retainer	1	
8	Shaft bearing	3	
10	Bottom cover	1	
★ 11	Bottom gasket	1	
12	Taper pin	1	
13-1	Packing retainer	1	
13-3	Ring	1	
★ 14	Gland packing	1 set	
15	Gland bush	1	
16	Gland flange	1	
17	Gland bolt	2	
18	Gland nut	2	
★ 20	Ball	4	
★ 21	Set screw	4	
22	Hexagon bolt, Spring washer	4 sets	
23	Stem key	1	
29	C-ring	1	
31	Eye bolt	2	Only 450mm to 600mm

Remark: The ★ indicates recommended spare parts. They are supplied as "Seat ring set" with a small hexagonal spanner to remove set screws (P.21).

304A Actuator selection chart

■80mm to 300mm

Model	Category	Size (mm / inch) 80 / 3	100 / 4	125 / 5	150 / 6	200 / 8	250 / 10	300 / 12
1T	T10	1T-2			1T-3			
	T20							
2U	T10	2U-2			2U-4			2U-5
	T20							
7E	T10	T85			T200		T380	T750
	T20							
7G,7F 3U,3K	T10	T200S	T380S		T380S	T750S		TG-12S
	T20							
4 I	T10	4 I-0	4 I-1		4 I-2		4 I-2.5	4 I-3
	T20							
4J	T10	SRJ-010			SRJ-020		SRJ-060	
	T20							

■304A Pressure rating

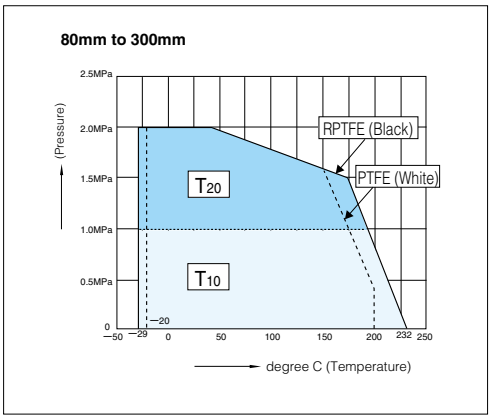

304A Standard stem material

■80mm to 300mm

SCPH2 / WCB body

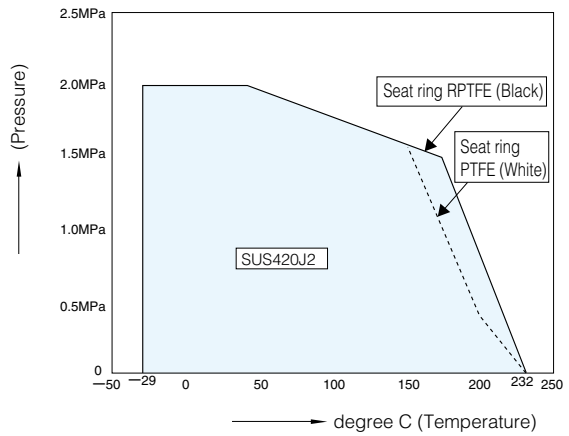

SCS14A / CF8M body

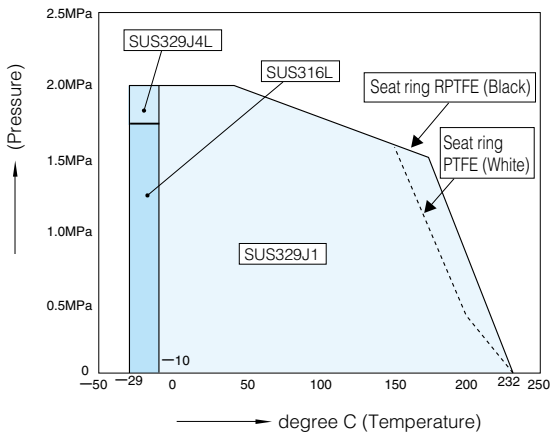

304A Actuator selection chart

■350mm to 600mm

Model	Category	Size (mm/inch) 350 / 14	400 / 16	450 / 18	500 / 20	600 / 24
2S	A	DGH-3	DGH-4	DGH-4	DGH-4	DGH-4+R/G5
	B	DGH-3	DGH-4	DGH-4	DGH-4+R/G5	DGH-4.5 +R/G5
	C	DGH-3	DGH-4	DGH-4+R/G5	DGH-4+R/G5	DGH-4.5 +R/G5
3A	A	TGA-125	TGA-140	TGA-140	TGA-140	TGA-180
	B	TGA-140	TGA-140	TGA-160	TGA-160	TGA-200
	C	TGA-140	TGA-160	TGA-160	TGA-180	TGA-220
3U,3K	A	TG-14S	TG-20S	TG-20S	TG-20S	TG-20S
	B	TG-20S	TG-20S	TG-20S	TG-20S	TG-20S
	C	TG-20S	TG-20S	TG-20S	TG-20S	TG-20S
4 I	A	4 I-4	4 I-4	4 I-4	4 I-4	4 I-4
	B	4 I-4	4 I-4	4 I-4	4 I-4	4 I-4
	C	4 I-4	4 I-4	4 I-4	4 I-4	4 I-4
4L	A	LTKD-01 0.2kW/DGH-3	LTKD-02 0.4kW/DGH-4	LTKD-02 0.4kW/DGH-4	LTKD-02 0.4kW/DGH-4	LTKD-02 0.75kW/DGH-4
	B	LTKD-01 0.2kW/DGH-3	LTKD-02 0.4kW/DGH-4	LTKD-02 0.75kW/DGH-4	LTKD-02 1.5kW/ DGH-4	LTKD-05 1.5kW/ DGH-5
	C	LTKD-02 0.4kW/DGH-4	LTKD-02 0.75kW/DGH-4	LTKD-02 0.75kW/DGH-4	LTKD-02 1.5kW/ DGH-4	LTKD-05 1.5kW/ DGH-5

■304A Pressure rating

350mm to 450mm

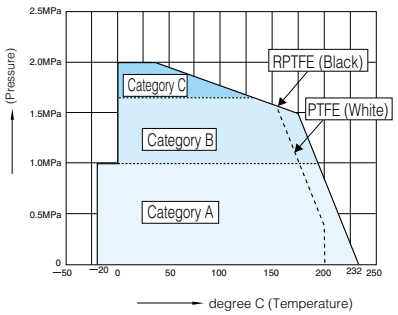

500mm·600mm

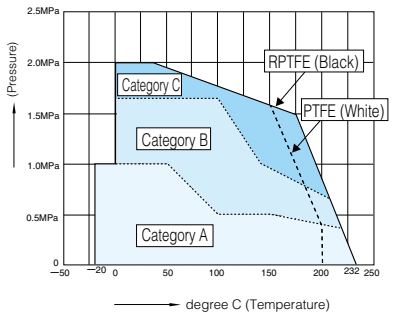

304A Standard stem material

■350mm to 600mm

SCPH2 / WCB body

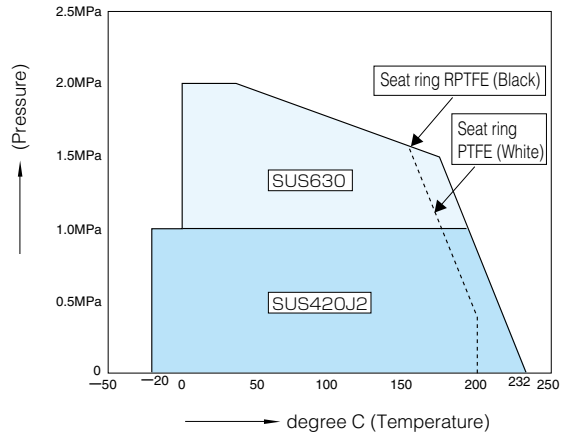

SCS13A / CF8 body

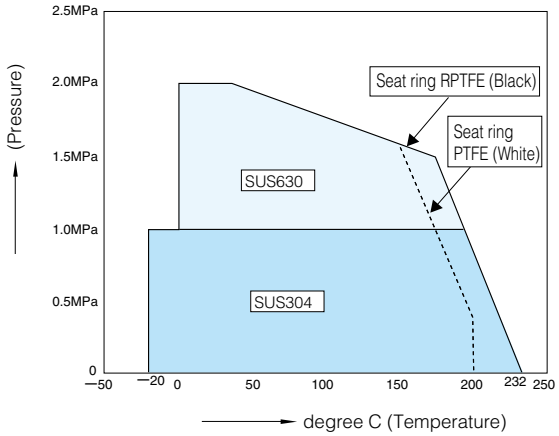

Dimension List

Wafer type 304A

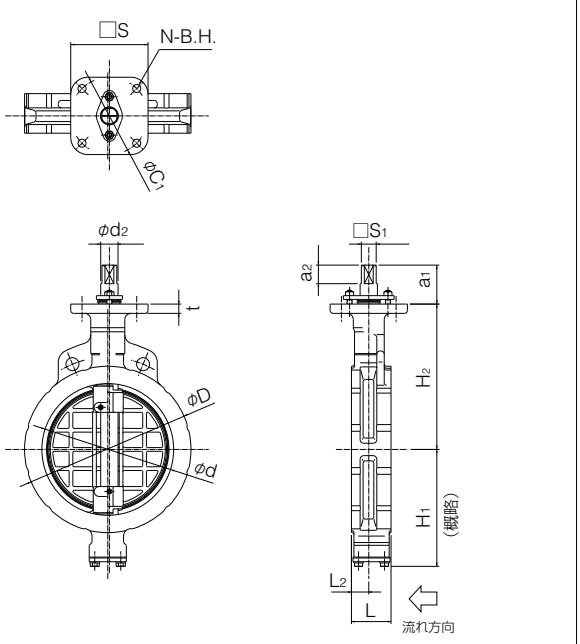

Lugged type 304Q

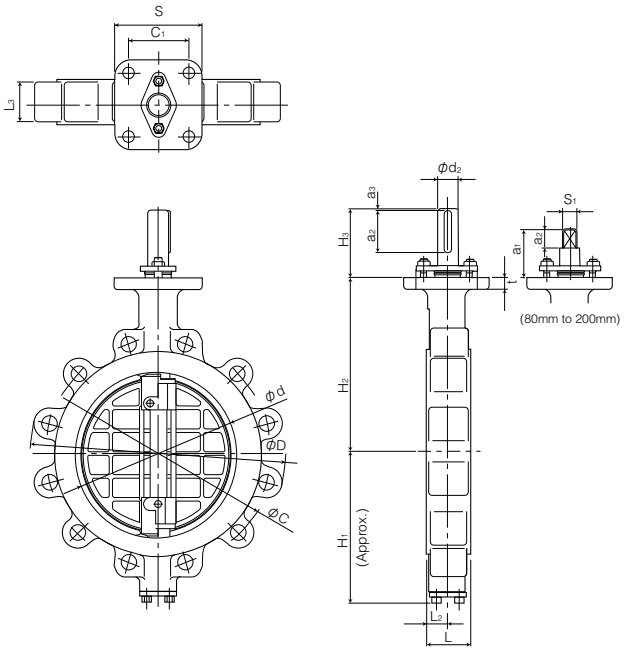

■304A Dimension List

Stem shape	Nominal size		Dimension (mm)														Approx. Weight (kg)
	mm	inch	φd	φD	L	L2	H1	H2	a1	a2	□S1	φd2	b	t2	t	ISO 5211 Top Flange	
01	80	3	89	127	48	23	95	147	52.5	16.5	14	16	—	—	15	F10	5
	100	4	112	156	54	24	110	170	52.5	16.5	14	16	—	—	15	F10	6.2
	125	5	137	185	56	24	139	185	52.5	16.5	16	20	—	—	15	F10	9.3
	150	6	163	216	57	23	164	205	55.5	20	18	22	—	—	15	F12	12.5
	200	8	213	269	64	28	190	235	63	30	24	28	—	—	15	F12	19
02	250	10	263	330	71	31	236	283	108	67.3	—	32	10	3	18	F14	33
	300	12	315	381	81	35	246	310	111	72.3	—	35	10	3	18	F14	42
	350	14	350	416	92	39.5	308	340	113	72	—	38	10	3	18	F14	61
	400	16	400	475	102	39	348	372	113	72	—	42	12	3.5	18	F14	88
	450	18	450	534	114	43	366	406	141.5	68	—	45	12	3.5	20	F16	135
	500	20	500	589	127	50	405	442	141.5	79	—	49	14	4	20	F16	173
	600	24	600	693	154	64	461	493	141.5	80	—	59	16	5	20	F16	272

■Top Flange Dimension

ISO 5211 Top Flange	□S	φC1	N	B.H.
F10	102	102	4	11
F12	125	125	4	13
F14	140	140	4	19
F16	165	165	4	23

Stem shape	01 : square 02 : round with key

■304Q Dimension List

Nominal size		Dimension (mm)																Approx. Weight (kg)
mm	inch	φd	φD	L	L2	L3	H1	H2	H3	φd2	a2	a3	S1	S	t	C1	φC	
80	3	89	198	48	23	38	95	147	52.5	16	16.5	—	14	102	15	72	152.5	6
100	4	112	227	54	24	46	110	170	52.5	16	16.5	—	14	102	15	72	190.5	9.5
125	5	137	256	56	24	48	139	185	52.5	20	16.5	—	16	102	15	72	216	14
150	6	163	282	57	23	49	164	205	55.5	22	20	—	18	125	15	88.4	241.5	16
200	8	213	343	64	28	54	190	235	63	28	30	—	24	125	15	88.4	298.5	24
250	10	263	412	71	31	61	236	283	108	32	65	2	—	140	18	99	362	41
300	12	315	482	81	35	71	246	310	111	35	70	2	—	140	18	99	432	56
350	14	350	536	92	39.5	70	308	340	113	38	70	2	—	140	18	99	476.2	85
400	16	400	600	102	39	75	348	372	113	42	70	2	—	140	18	99	539.7	125
450	18	450	636	114	43	83	366	406	141.5	45	60	8	—	165	20	116.7	577.8	170
500	20	500	720	127	50	90	405	442	141.5	49	70	9	—	165	20	116.7	635	225
600	24	600	814	154	64	131	461	493	141.5	59	70	10	—	165	20	116.7	749.3	350

Lock lever type 304A-1T(80mm to 150mm)

Nominal size		Dimension (mm)									Lever type	Approx. Mass (kg)
mm	inch	φd	φD	L	L_2	H_1	H_2	Category	H_3	W		
80	3	89	127	48	23	95	147	T_{10}, T_{20}	117	300	1T-2	7.1
100	4	112	156	54	24	110	170	T_{10}, T_{20}	117	300	1T-2	8.3
125	5	137	185	56	24	139	185	T_{10}, T_{20}	117	300	1T-2	11.4
150	6	163	216	57	23	164	205	T_{10}, T_{20}	125	350	1T-3	14.6

■304A-1T

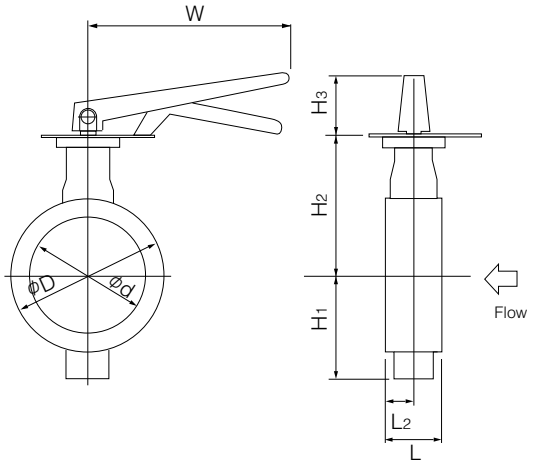

■1T Installation direction

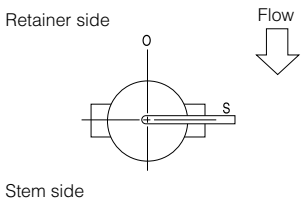	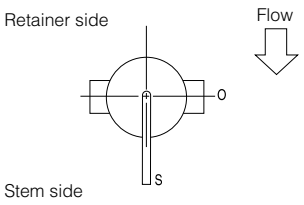	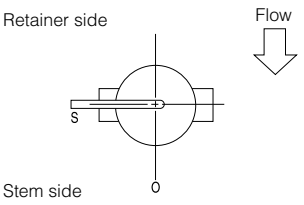	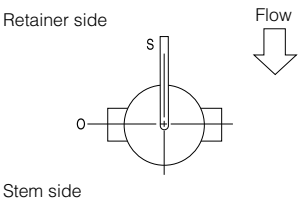
1TA	1TB	1TC	1TD

Worm gear type 304A-2U (80mm to 300mm) / 304A-2S (350mm to 600mm)

Nominal size		Dimension (mm)												Gear type	Approx. Mass (kg)
mm	inch	φd	φD	L	L_2	H_1	H_2	Category	H_3	E	K	F	φW		
80	3	89	127	48	23	95	147	T_{10},T_{20}	61	44	53	173.5	160	2U-2	7.9
100	4	112	156	54	24	110	170	T_{10},T_{20}	61	44	53	173.5	160	2U-2	9.1
125	5	137	185	56	24	139	185	T_{10},T_{20}	61	44	53	173.5	160	2U-2	12.4
150	6	163	216	57	23	164	205	T_{10},T_{20}	77.5	87.5	90	222.5	200	2U-4	29
200	8	213	269	64	28	190	235	T_{10},T_{20}	77.5	87.5	90	222.5	200	2U-4	35.5
250	10	263	330	71	31	236	283	T_{10},T_{20}	90	87.5	90	222.5	280	2U-4	49.5
300	12	315	381	81	35	246	310	T_{10},T_{20}	92	90	105	266	280	2U-5	64
350	14	350	416	92	39.5	308	340	A,B,C	97	117	164	335	355	DGH-3	99
400	16	400	475	102	39	348	372	A	97	117	164	335	355	DGH-3	124
								B,C	215	140	198	402	450	DGH-4	162
450	18	450	534	114	43	366	406	A,B	127	140	198	402	450	DGH-4	198
								C	127	140	198	432	355	DGH-4+R/G5	200
500	20	500	589	127	50	405	442	A,B	127	140	198	402	450	DGH-4	236
								C	127	140	198	432	355	DGH-4+R/G5	238
600	24	600	693	154	64	461	493	A	127	140	198	432	355	DGH-4+R/G5	338
								B,C	245	185	264	497	355	DGH-4.5+R/G5	413

■304A-2U/2S

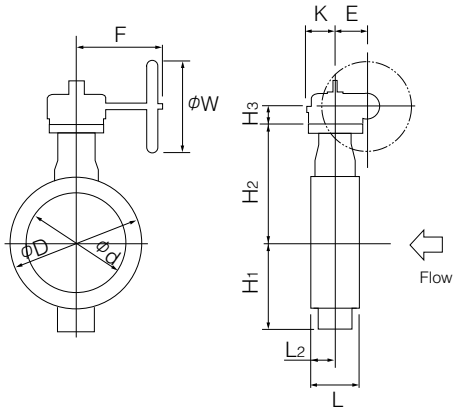

■2U/2S Installation direction

Retainer side Flow 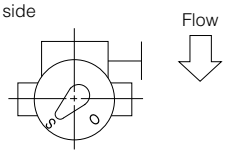 Stem side	Retainer side Flow 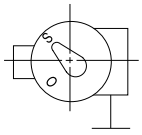 Stem side	Retainer side Flow 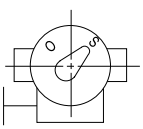 Stem side	Retainer side Flow 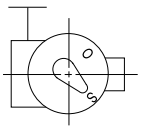 Stem side
2UA/2SA	2UB/2SB	2UC/2SC	2UD/2SD

Double-acting pneumatic cylinder type 304A-7E(80mm to 300mm)

Nominal size		Dimension (mm)													Cylinder type	Approx. Mass (kg)
mm	inch	φd	φD	L	L_2	H_1	H_2	Category	H_3	H_4	A	P	f_1	f_2		
80	3	89	127	48	23	95	147	T_{10},T_{20}	168	26.5	276	142	75	47	T85	11
100	4	112	156	54	24	110	170	T_{10}	168	26.5	276	142	75	47	T85	12
								T_{20}	203	26.5	346	176	79	57	T200	16
125	5	137	185	56	24	139	185	T_{10},T_{20}	203	26.5	346	176	79	57	T200	19
150	6	163	216	57	23	164	205	T_{10},T_{20}	203	29.5	346	176	79	57	T200	23
200	8	213	269	64	28	190	235	T_{10},T_{20}	231	29.5	423	214	91	69	T380	35
250	10	263	330	71	31	236	283	T_{10}	231	190	423	214	91	87.5	T380	63
								T_{20}	269	190	546	270	118	87.5	T750	73
300	12	315	381	81	35	246	310	T_{10},T_{20}	269	190	546	270	118	87.5	T750	82

■304A-7E

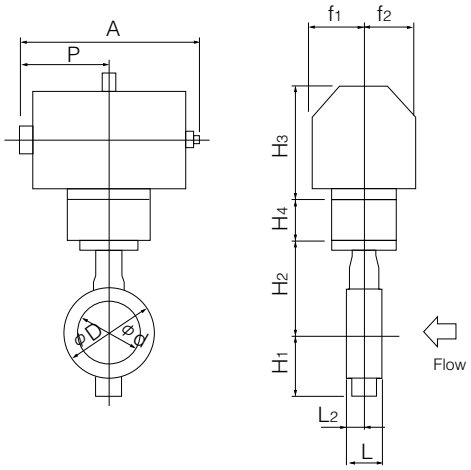

■7E Installation direction

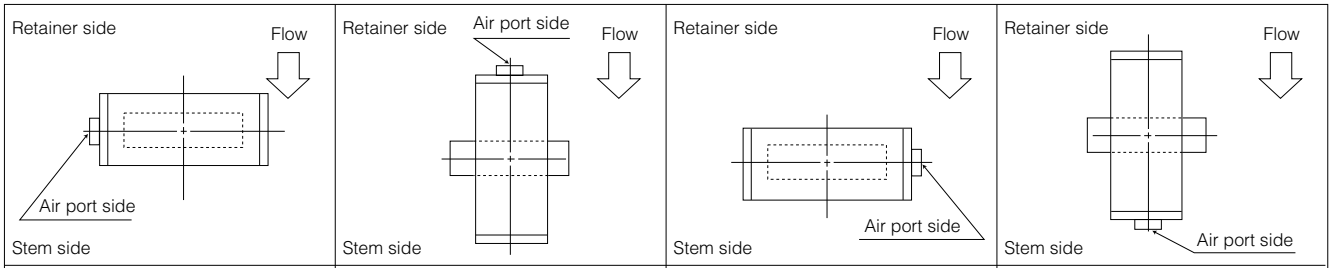

Double-acting pneumatic cylinder type 304A-3A (350mm to 600mm)

Nominal size		Dimension (mm)												Cylinder type	Approx. Mass (kg)
mm	inch	Φd	ΦD	L	L_2	H_1	H_2	Category	H_3	A	P	f_1	f_2		
350	14	350	416	92	39.5	308	340	A	424	743	381	100	164	TGA-125	110
								B,C	472	810	417	100	180	TGA-140	121
400	16	400	475	102	39	348	372	A	424	743	381	100	164	TGA-125	136
								B	472	810	417	100	180	TGA-140	147
								C	510	939	483	130	202	TGA-160	214
450	18	450	534	114	43	366	406	A	502	810	417	100	180	TGA-140	207
								B,C	530	939	483	130	202	TGA-160	263
500	20	500	589	127	50	405	442	A	502	810	417	100	180	TGA-140	246
								B	530	939	483	130	202	TGA-160	302
								C	543	1053	543	130	218	TGA-180	330
600	24	600	693	154	64	461	493	A	543	1053	543	130	218	TGA-180	431
								B	610	1163	599	160	253	TGA-200	475
								C	640	1248	642	160	270	TGA-220	535

■304A-3A

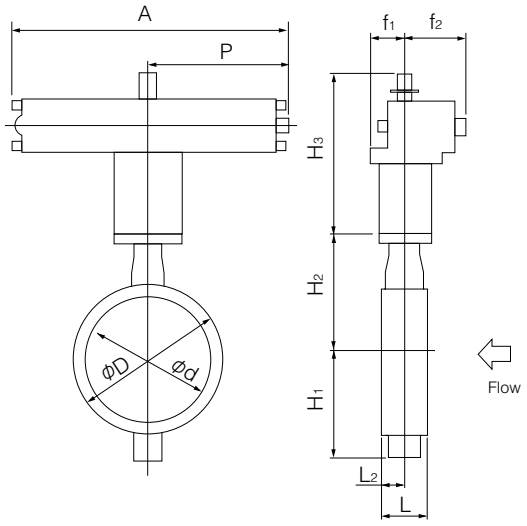

■3A Installation direction

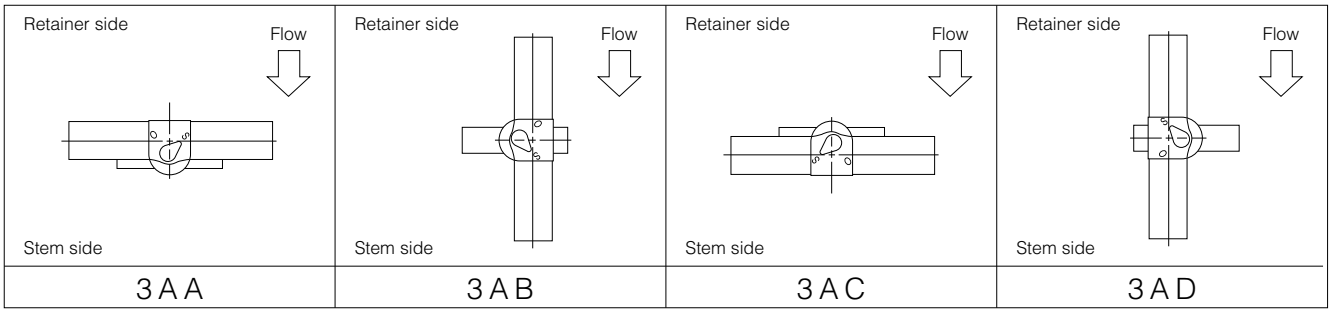

Single-acting pneumatic cylinder type 304A-7G (Air to open: 80mm to 200mm) / 304A-7F (Air to close: 80mm to 200mm)

Nominal size		Dimension (mm)													Cylinder type	Approx. Mass (kg)
mm	inch	Φd	ΦD	L	L_2	H_1	H_2	Category	H_3	H_4	A	P	f_1	f_2		
80	3	89	127	48	23	95	147	T_{10},T_{20}	203	26.5	449	226	79	57	T200S	17
100	4	112	156	54	24	110	170	T_{10}	203	26.5	449	226	79	57	T200S	18
								T_{20}	231	26.5	550	276	91	69	T380S	27
125	5	137	185	56	24	139	185	T_{10}	231	26.5	550	276	91	69	T380S	30
								T_{20}	269	26.5	723	360	118	85	T750S	43
150	6	163	216	57	23	164	205	T_{10},T_{20}	269	29.5	723	360	118	85	T750S	47
200	8	213	269	64	28	190	235	T_{10}	269	29.5	723	360	118	85	T750S	54

■304A-7F

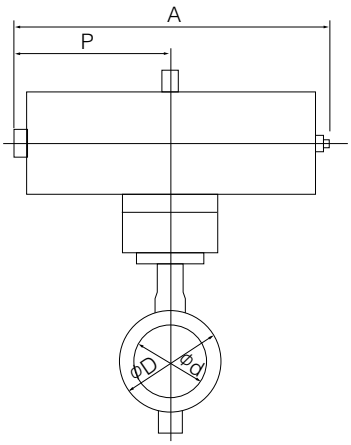

■304A-7G

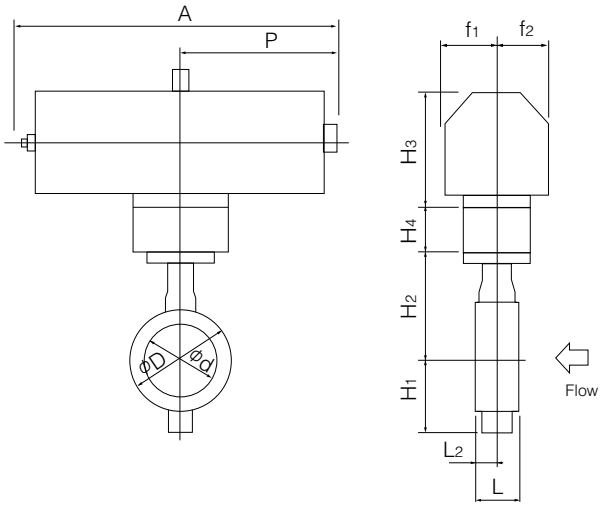

■7F Installation direction

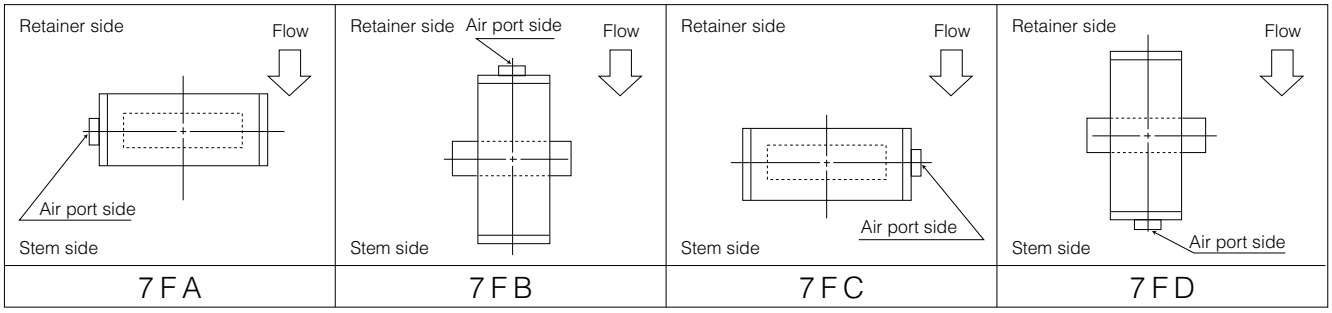

■7G Installation direction

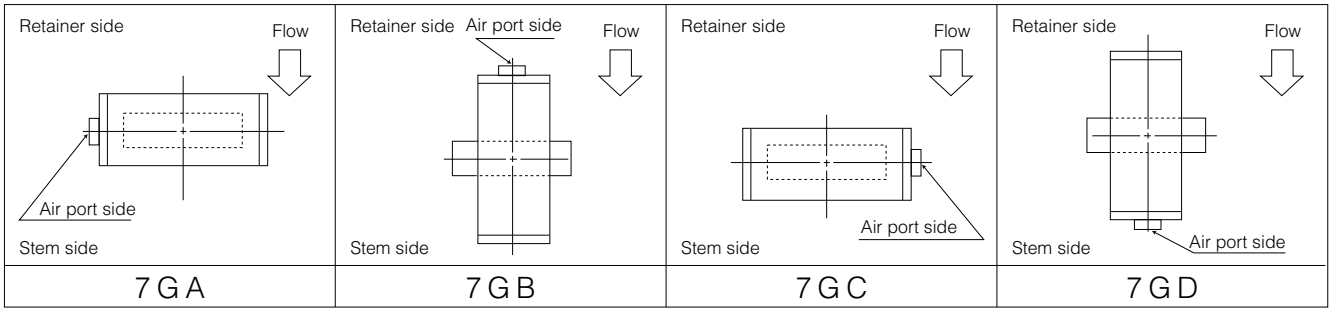

Single-acting pneumatic cylinder type 304A-3U (Air to open: 200mm to 600mm) / 304A-3K (Air to close: 200mm to 600mm)

Nominal size		Dimension (mm)												Cylinder type	Approx. Mass (kg)
mm	inch	φd	φD	L	L_2	H_1	H_2	Category	H3	A	P	f1	f2		
200	8	213	269	64	28	190	235	T_{10}	377	945	585	75	165	TG-10S	78
								T_{20}	377	1080	720	94	206	TG-12S	122
250	10	263	330	71	31	236	283	T_{10},T_{20}	417	1080	720	94	206	TG-12S	141
300	12	315	381	81	35	246	310	T_{10},T_{20}	417	1080	720	94	206	TG-12S	150
350	14	350	416	92	39.5	308	340	A	450	1255	865	131	257	TG-14S	264
								B, C	602	1655	1095	164	348	TG-20S	485
400	16	400	475	102	39	348	372	A	450	1255	865	131	257	TG-14S	292
								B, C	602	1655	1095	164	348	TG-20S	512
450	18	450	534	114	43	366	406	A, B, C	624	1655	1095	164	348	TG-20S	564
500	20	500	589	127	50	405	442	A, B, C	624	1655	1095	164	348	TG-20S	602
600	24	600	693	154	64	461	493	A	624	1655	1095	164	348	TG-20S	701

■304A-3K

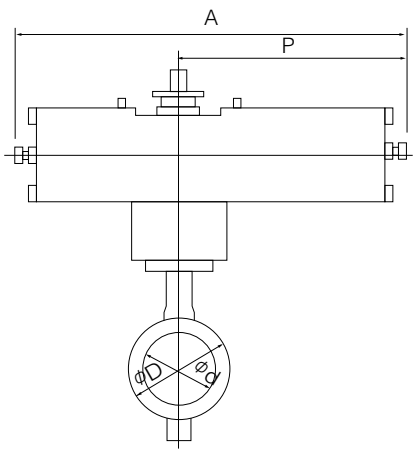

■304A-3U

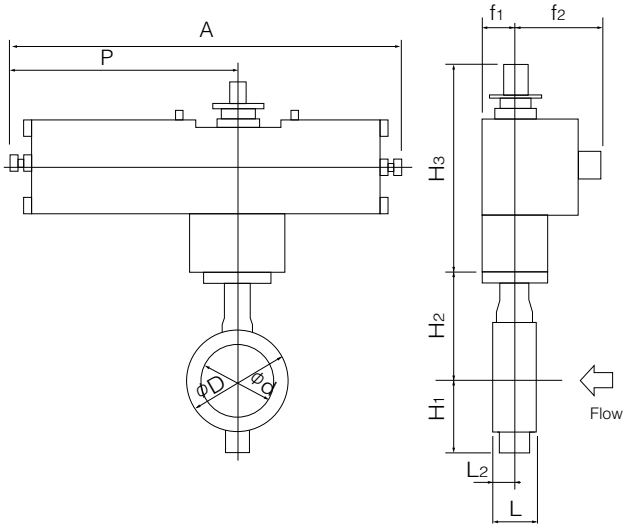

■3K Installation direction

3KA	3KB	3KC	3KD
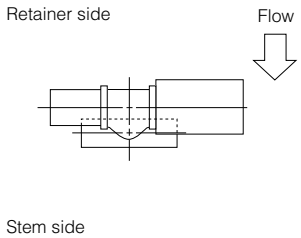	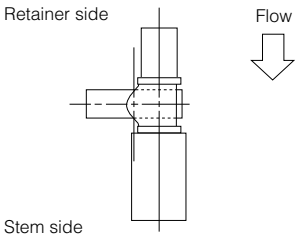	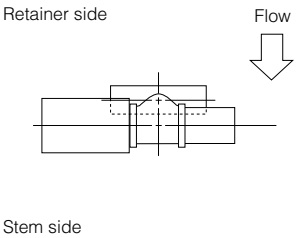	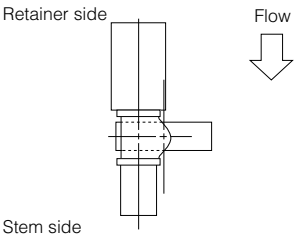

■3U Installation direction

3UA	3UB	3UC	3UD
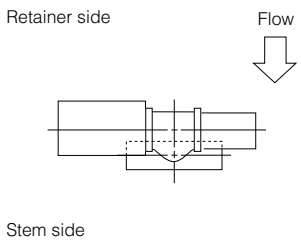	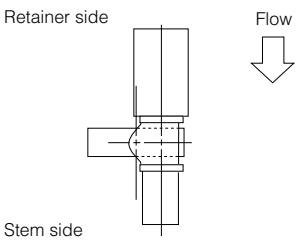	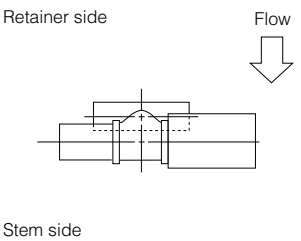	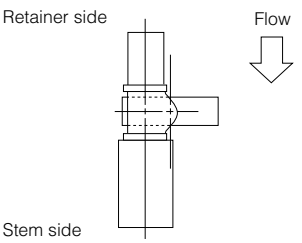

Single phase electric motor type 304A-4 I (80mm to 400mm)

Nominal size		Dimension (mm)												Motor type	Approx. Mass (kg)
mm	inch	φd	φD	L	L_2	H_1	H_2	Category	H_3	A	P	F	K		
80	3	89	127	48	23	95	147	T_{10},T_{20}	250	202	100	85	54	4 I-0	12.1
100	4	112	156	54	24	110	170	T_{10}	265	252	138	126	65	4 I-1	15.5
								T_{20}	298	310	167	154	85	4 I-2	21.5
125	5	137	185	56	24	139	185	T_{10},T_{20}	298	310	167	154	85	4 I-2	24.5
150	6	163	216	57	23	164	205	T_{10},T_{20}	373	310	167	154	85	4 I-2	29.5
200	8	213	269	64	28	190	235	T_{10},T_{20}	373	310	167	154	85	4 I-2.5	39
250	10	263	330	71	31	236	283	T_{10}	411	310	167	154	85	4 I-2.5	56.5
								T_{20}	420	388	223	246	136	4 I-3	66
300	12	315	381	81	35	246	310	T_{10},T_{20}	420	388	223	246	136	4 I-3	75
350	14	350	416	92	39.5	308	340	A , B	423	388	223	246	136	4 I-4	96
400	16	400	475	102	39	348	372	A	423	388	223	246	136	4 I-4	123

■304A-4 I

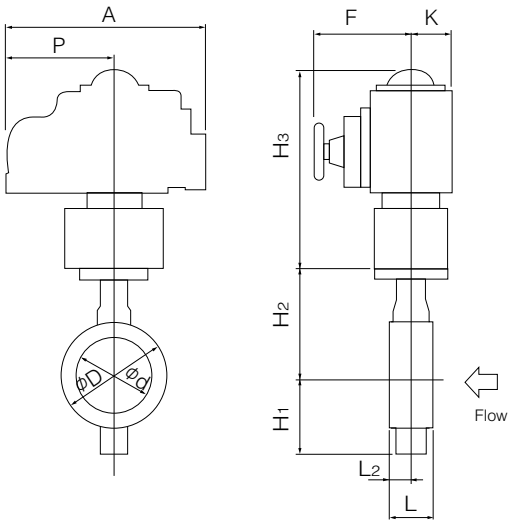

■4I Installation direction

4 I A	4 I B	4 I C	4 I D
Retainer side / Flow / Stem side	Retainer side / Flow / Stem side	Retainer side / Flow / Stem side	Retainer side / Flow / Stem side

Three phase motor actuator type 304A-4L (350mm to 600mm)

Nominal size		Dimension (mm)													Motor type	Approx. Mass (kg)
mm	inch	φd	φD	L	L_2	H_1	H_2	Category	H_3	E	K	F	M	P		
350	14	350	416	92	39.5	308	340	A, B	547	117	164	533	357	230	LTKD-01 0.2kW /DGH-3	171
								C	592	140	198	593	373	230	LTKD-02 0.4kW /DGH-4	221
400	16	400	475	102	39	348	372	A	547	117	164	533	357	230	LTKD-01 0.2kW /DGH-3	197
								B	592	140	198	593	373	230	LTKD-02 0.4kW /DGH-4	247
								C	592	140	198	593	400	230	LTKD-02 0.75kW /DGH-4	258
450	18	450	534	114	43	366	406	A	642	140	198	593	373	230	LTKD-02 0.4kW /DGH-4	308
								B, C	642	140	198	593	400	230	LTKD-02 0.75kW /DGH-4	319
500	20	500	589	127	50	405	442	A	642	140	198	593	373	230	LTKD-02 0.4kW /DGH-4	346
								B, C	642	140	198	593	400	230	LTKD-02 0.75kW /DGH-4	357
600	24	600	693	154	64	461	493	A	642	140	198	593	400	230	LTKD-02 0.75kW /DGH-4	460
								B, C	749	210	300	748	477	360	LTKD-05 1.5kW /DGH-5	605

■304A-4L

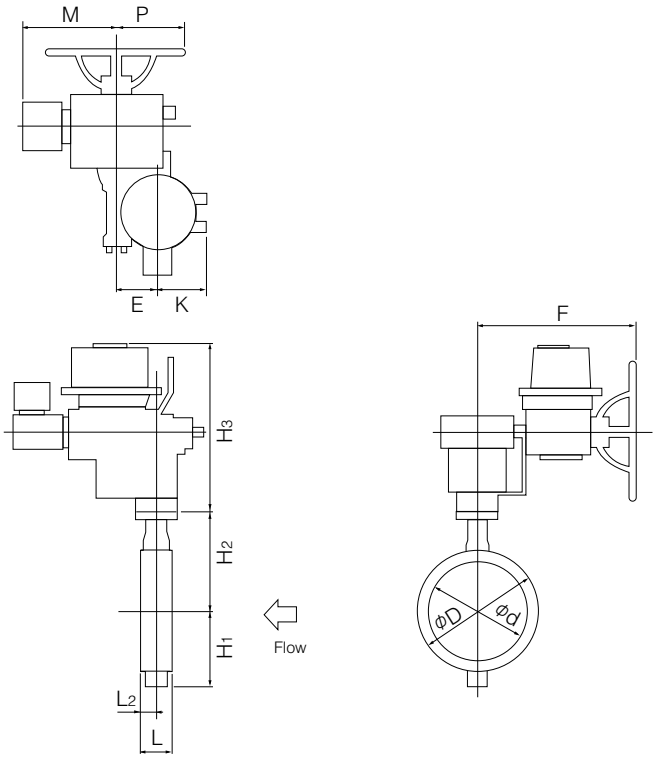

■4L Installation direction

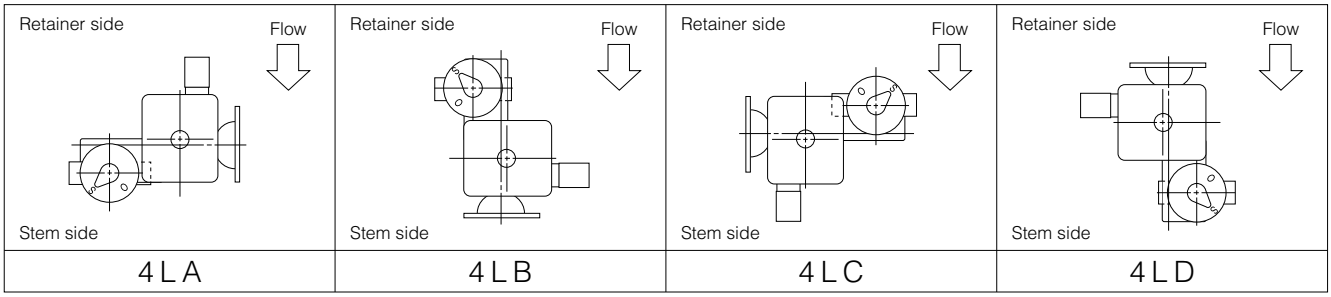

304A Cv value

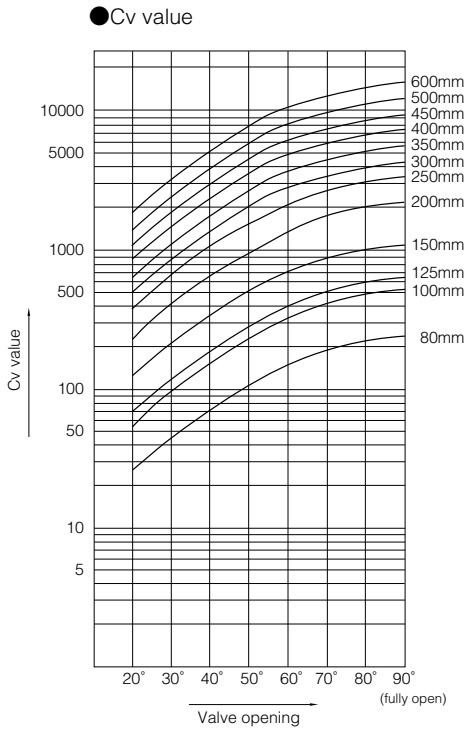

304A Cv value

Nominal size		Valve opening							
mm	inch	20°	30°	40°	50°	60°	70°	80°	90°
80	3	29	52	85	122	162	207	243	252
100	4	49	88	144	207	279	351	414	432
125	5	77	140	230	333	441	549	648	684
150	6	126	225	369	531	720	900	1080	1116
200	8	234	423	693	990	1350	1710	1980	2070
250	10	390	703	1148	1648	2240	2857	3300	3443
300	12	492	888	1454	2081	2838	3612	4172	4354
350	14	648	1170	1915	2741	3739	4758	5496	5736
400	16	829	1496	2449	3505	4780	6084	7027	7334
450	18	1041	1879	3076	4403	6004	7642	8827	9212
500	20	1323	2387	3909	5595	7630	9710	11216	11705
600	24	1929	3481	5700	8159	11126	14161	16356	17070

304A pressure loss coefficient

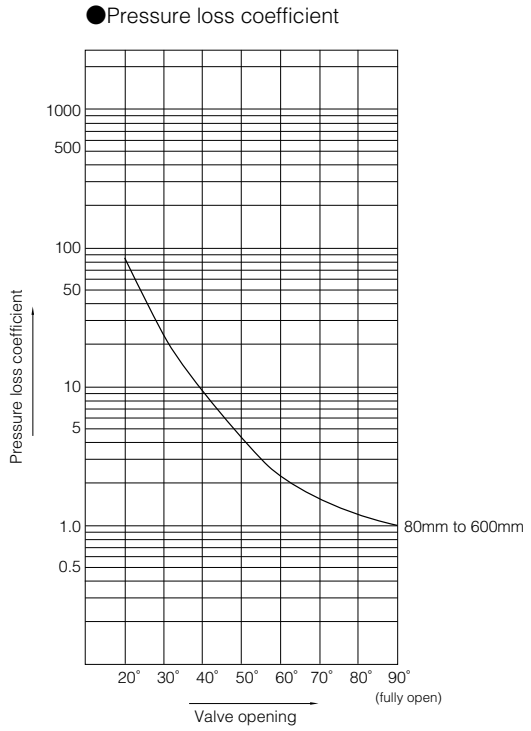

304A Pressure loss coefficient

Nominal size		Valve opening							
mm	inch	20°	30°	40°	50°	60°	70°	80°	90°
80	3	95	29	11	5	3	2	1	1
100	4	98	30	11	5	3	2	1	1
125	5	93	28	10	5	3	2	1	1
150	6	70	22	8	4	2	1	1	1
200	8	62	19	7	3	2	1	1	1
250	10	54	17	6	3	2	1	1	1
300	12	70	21	8	4	2	1	1	1
350	14	68	21	8	4	2	1	1	1
400	16	73	22	8	4	2	1	1	1
450	18	75	23	9	4	2	1	1	1
500	20	72	22	8	4	2	1	1	1
600	24	70	22	8	4	2	1	1	1

304A Applicable flange standard

Nominal size		JIS				ANSI/API/JPI	BS4504		DIN		BS10
mm	inch	5K	10K	16K	20K	150Lb	PN10	PN16	NP10	NP16	Table E
80	3	×	D	D	D	○	D	D	D	D	×
100	4	×	D	D	D	D	D	D	D	D	×
125	5	×	D	D	D	D	D	D	D	D	×
150	6	×	D	D	D	D	D	D	D	D	×
200	8	×	D	D	D	D	D	D	D	D	×
250	10	×	D	D	D	D	D	D	D	D	×
300	12	×	D	D	D	D	D	D	D	D	×
350	14	D	D	D	D	D	D	D	D	D	D
400	16	D	D	D	D	D	D	D	D	D	D
450	18	D	T	T	T	D	T	T	T	T	D
500	20	T	T	T	T	T	T	T	T	T	T
600	24	T	T	T	T	T	T	T	T	T	T

○ : Can be used without flange drilling.
D : With flange drilling
T : With flange tapping
× : Not applicable

304A Applicable pipe list in case of A

Nominal size		SGP		Sch20		Sch40		Sch60		Sch80		Sch10S		Sch20S		Minimum internal diameters of piping (mm)
mm	inch	Retainer (up stream)	Stem Side (down stream)	Retainer (up stream)	Stem Side (down stream)	Retainer (up stream)	Stem Side (down stream)	Retainer (up stream)	Stem Side (down stream)	Retainer (up stream)	Stem Side (down stream)	Retainer (up stream)	Stem Side (down stream)	Retainer (up stream)	Stem Side (down stream)	
80	3	○	○	○	○	○	○	○	○	○	○	○	○	○	○	72.5
100	4	○	○	○	○	○	○	○	○	○	○	○	○	○	○	93.8
125	5	○	○	○	○	○	○	○	○	○	○	○	○	○	○	119.4
150	6	○	○	○	○	○	○	○	×	○	×	○	○	○	○	147.5
200	8	○	○	○	○	○	○	○	×	○	×	○	○	○	○	197.5
250	10	○	○	○	○	○	○	○	×	○	×	○	○	○	○	248.1
300	12	○	○	○	○	○	○	○	×	×	×	○	○	○	○	297.6
350	14	○	○	○	○	○	○	○	×	×	×	–	–	–	–	330
400	16	○	○	○	○	○	○	○	×	○	×	–	–	–	–	377
450	18	○	○	○	○	○	○	○	×	○	×	–	–	–	–	424
500	20	○	○	○	○	○	○	○	×	○	×	–	–	–	–	470
600	24	–	–	○	○	○	○	○	×	×	×	–	–	–	–	564

304A Applicable pipe list in case of B

Nominal size		SGP		Sch20		Sch40		Sch60		Sch80		Sch10S		Sch20S		Minimum internal diameters of piping (mm)
mm	inch	Retainer (up stream)	Stem Side (down stream)	Retainer (up stream)	Stem Side (down stream)	Retainer (up stream)	Stem Side (down stream)	Retainer (up stream)	Stem Side (down stream)	Retainer (up stream)	Stem Side (down stream)	Retainer (up stream)	Stem Side (down stream)	Retainer (up stream)	Stem Side (down stream)	
80	3	○	○	○	○	○	○	○	○	○	○	○	○	○	○	63.6
100	4	○	○	○	○	○	○	○	○	○	○	○	○	○	○	87.0
125	5	○	○	○	○	○	○	○	○	○	○	○	○	○	○	112.8
150	6	○	○	○	○	○	○	○	○	○	○	○	○	○	○	142.5
200	8	○	○	○	○	○	○	○	×	○	×	○	○	○	○	193.3
250	10	○	○	○	○	○	○	○	×	○	×	○	○	○	○	248.1
300	12	○	○	○	○	○	○	○	×	○	×	○	○	○	○	297.6
350	14	○	○	○	○	○	○	○	×	○	×	–	–	–	–	323.0
400	16	○	○	○	○	○	○	○	×	○	×	–	–	–	–	371.0
450	18	○	○	○	○	○	○	○	×	○	×	–	–	–	–	418.0
500	20	○	○	○	○	○	○	○	×	○	×	–	–	–	–	464.0
600	24	–	–	○	○	○	○	○	×	○	×	–	–	–	–	557.0

Remark 1: ○=Applicable ×=Not applicable
Remark 2: The clearance of disc and pipe is based on API 609 and
MSS SP67 80mm to 150mm: 1.5mm, 200mm to 500mm: 3.0mm, 600mm: 6.4mm
Remark 3: In case of "×"shown above, internal pipe diameter or flange is smaller tham mimium internal diameter.
Consider to put a spacer between a valve and a flange. Consult us.

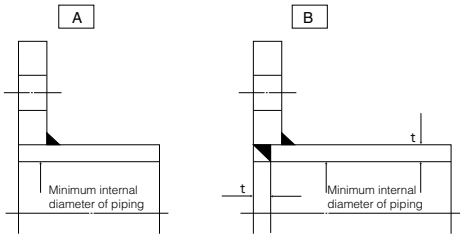

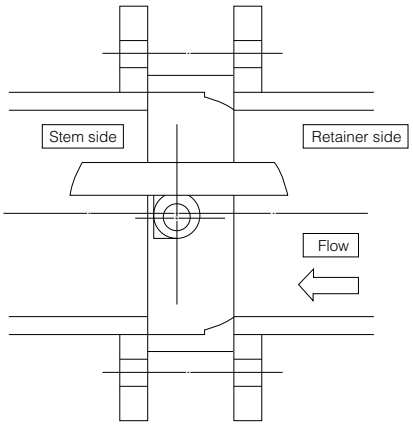

304A Piping gasket

●In case of sheet gasket ..... Any standard can be used.
●In case of spiral gasket
For API, JPI, ANSI flange ..... Any standard gaskets with inner/outer ring can be used.
For JIS flange ..... Use special spiral gasket shown below.

■Special spiral gasket for JIS flange size

Nominal size		JIS flange					
		5K, 10K, 16K, 20K			5K	10K	16K, 20K
mm	inch	D1	D2	D3	D4	D4	D4
80	3	89	97	120	×	134	140
100	4	115	124	145	×	159	165
125	5	140	151	177	×	190	202
150	6	166	178	205	×	220	237
200	8	217	227	256	×	270	282
250	10	268	278	315	×	332	354
300	12	319	331	362	×	377	404
350	14	356	369	399	412	422	450
400	16	406	420	457	472	484	508
450	18	458	472	517	532	539	573
500	20	508	532	567	582	594	628
600	24	610	626	672	689	700	734

Remark1; ×: Not applicable

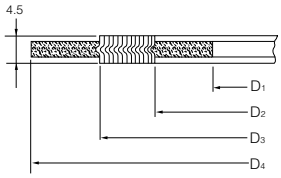

■Applicable standard for spiral gasket

Nominal size		Tomoe special			Standard gasket		
mm	inch	JIS 10K	JIS 16K JIS 20K	ANSI 125/150Lb	JIS 10K	JIS 16K JIS 20K	ANSI 125/150Lb
80	3	○	○	○	×	×	○
100	4	○	○	○	×	×	○
125	5	○	○	○	×	×	○
150	6	○	○	○	×	×	○
200	8	○	○	○	×	×	○
250	10	○	○	○	×	×	○
300	12	○	○	○	×	×	○
350	14	○	○	○	×	×	○
400	16	○	○	○	×	×	○
450	18	○	○	○	×	×	○
500	20	○	○	○	×	×	○
600	24	○	○	○	×	×	○

Remark 1: ○: Applicable, ×: Not applicable
Remark 2: In case a minute leakage of gas (less than 100PPm) becomes a problem, please inquire of our business charge.

304A Applicable standard for standard piping gasket

Nominal size		Max.allowable inside diameter (D)	Joint sheet or RPTFE solid gasket (t≦2mm)					PTFE mold type gasket VALQUA or NICHIAS				
mm	inch		JIS 5K	JIS 10K	JIS 16K JIS 20K	ANSI 125/150Lb	JPI 150Lb	JIS 5K	JIS 10K	JIS 16K JIS 20K	ANSI 125/150Lb	JPI 150Lb
80	3	97	×	○	○	○	○	×	○	○	○	○
100	4	124	×	○	○	○	○	×	○	○	○	○
125	5	151	×	○	○	○	○	×	○	○	○	○
150	6	178	×	○	○	○	○	×	○	○	○	○
200	8	227	×	○	○	○	○	×	○	○	○	○
250	10	282	×	○	○	○	○	×	○	○	○	○
300	12	331	×	○	○	○	○	×	○	○	○	○
350	14	362	○	○	○	○	○	○	○	○	○	○
400	16	414	○	○	○	○	○	○	○	○	○	○
450	18	468	○	○	○	○	○	○	○	○	○	○
500	20	518	○	○	○	○	○	○	○	○	○	○
600	24	619	○	○	○	○	○	○	○	○	○	○

Remark; ○: Applicable, ×: Not applicable

304A Piping Bolts and Nuts Sizes

Nominal size		JIS5K		JIS10K		JIS16K	
mm	inch	Long Bolts and Nuts	Setting Bolts	Long Bolts and Nuts	Setting Bolts	Long Bolts and Nuts	Setting Bolts
80	3	—	—	8-M16×145	—	8-M20×170	—
100	4	—	—	8-M16×145	—	8-M20×170	—
125	5	—	—	8-M20×170	—	8-M22×190	—
150	6	—	—	8-M20×170	—	12-M22×190	—
200	8	—	—	12-M20×170	—	12-M22×190	—
250	10	—	—	12-M22×190	—	12-M24×210	—
300	12	—	—	16-M22×190	—	16-M24×225	—
350	14	12-M22×210	—	16-M22×210	—	16-M30(P3)×245	—
400	16	16-M22×220	—	16-M24×235	—	16-M30(P3)×265	—
450	18	16-M22×230	※1	16-M24×250	4-M24×84×60	16-M30(P3)×280	4-M30(P3)× 95×65
					4-M24×58×50		4-M30(P3)× 73×50
500	20	16-M22×245	4-M22×80×50	16-M24×260	4-M24×90×60	16-M30(P3)×300	4-M30(P3)×105×65
			4-M22×60×50		4-M24×70×60		4-M30(P3)× 81×50
600	24	16-M24×280	4-M24×84×60	20-M30(P3)×300	4-M30(P3)×81×50	20-M36(P3)×345	4-M36(P3)×100×60
			4-M24×65×50		4-M30(P3)×65×50		4-M36(P3)× 82×50

Nominal size		JIS20K		ANSI150Lb, API/JPI150Lb	
mm	inch	Long Bolts and Nuts	Setting Bolts	Long Bolts and Nuts	Setting Bolts
80	3	8-M20×170	—	4-U5/8-11UNC×155	—
100	4	8-M20×170	—	8-U5/8-11UNC×155	—
125	5	8-M22×190	—	8-U3/4-10UNC×175	—
150	6	12-M22×190	—	8-U3/4-10UNC×175	—
200	8	12-M22×190	—	8-U3/4-10UNC×205	—
250	10	12-M24×210	—	12-U7/8- 9UNC×215	—
300	12	16-M24×225	—	12-U7/8- 9UNC×215	—
350	14	16-M30(P3)×260	—	12-U1 - 8UNC×240	—
400	16	16-M30(P3)×280	—	16-U1 - 8UNC×255	—
450	18	16-M30(P3)×300	4-M30(P3)×105×65	16-U1 1/8- 8UN×280	—
			4-M30(P3)× 81×50		
500	20	16-M30(P3)×315	4-M30(P3)×110×60	16-U1 1/8- 8UN×295	4-U1 1/8- 8UN×105×50
			4-M30(P3)× 90×65		4-U1 1/8- 8UN× 80×50
600	24	20-M36(P3)×360	4-M36(P3)×108×60	16-U1 1/4- 8UN×340	4-U1 1/4- 8UN×100×50
			4-M36(P3)× 90×50		4-U1 1/4- 8UN× 90×50

※1 Tapped drilling is also applicable.

Remark: Use SNB 7/S45C (A193 B7/A, 194 2H) SUS304/SUS304
For long bolt, use full thread bolt.
For hexagon nut, use heavy nut.
A metric screw should have 3 pitches if its nominal diameter exceeds M30.
A unified screw should have 8 threads per inch if its nominal diameter exceeds 1 inch.
Hexagon bolts (set bolts) are indicated with the retainer side on the up side and the stem side on down side.

Examples

Long bolts: 12 - M22 × 185
(N - M × L)

Setting bolts (Hexagon bolts): 4 - M30 × 95 × 65
(N - M × L × S)

Long bolts and nuts (full thread)

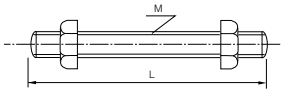

Setting bolts (Hexagon bolts)

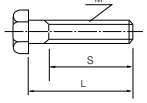

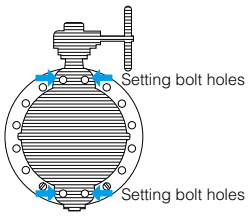

MEMO

General Purpose High Temperature and High Pressure Service Valves

302Y Wafer

304Y Wafer

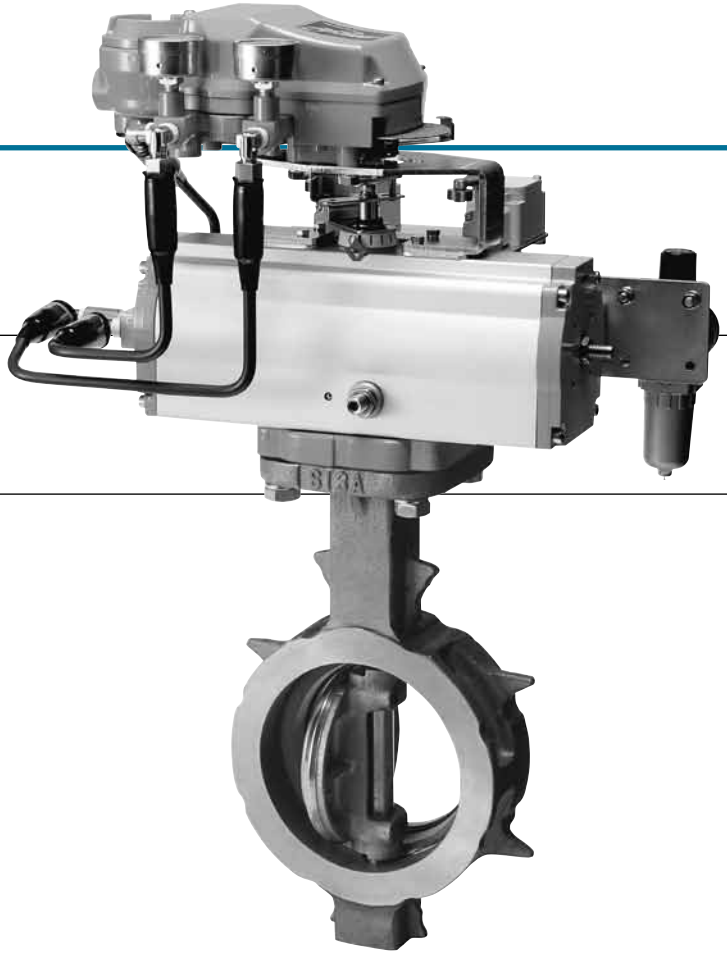





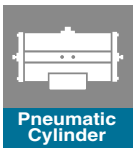



Features and Benefits

Ideal shut-off with new stopper mechanism. Two types of seat – metal and PTFE – for optimum performance in your application.

Unique stopper structure

For the 40 to 300mm models, automatic aligning and disc overrun prevention are ensured by the special spherical design of the inner surface of the body disc hub edge. Disc overrun is prevented by a protrusion on the inner surface of the body.

Double eccentric structure

The disc is rotated easily by minimal torque and unseats after turning only a small angle. Moreover, seat abrasion is prevented for a long life of reliable sealing.

Thin disc with a rigid construction

The disc is thin but ribbed for extra rigidity. The disc reduces thermal expansion and provides consistent sealing even in changing temperature or pressure situations.

Seal the flow from both directions

Seals flow in both directions. Valve can be used as is, even if the flow changes direction. (There are pressure limitations for each direction of flow. See Pressure-temperature leakage chart for recommended specifications.)

Easy replacement of the seat ring

The ball lock method is used to simplify replacement of the seat ring.

302Y
Resilient metal seat ring with original coil spring

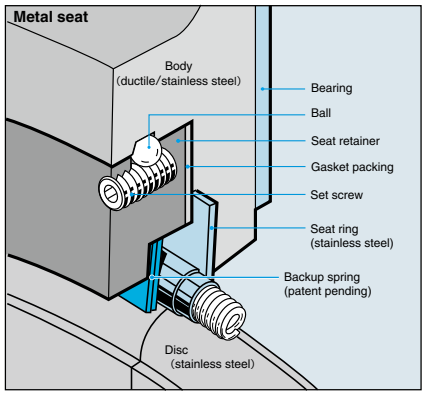

304Y
PTFE seat ring is inert to most chemical products and solvents

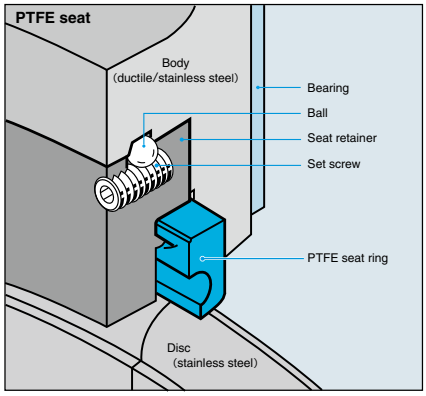

General Description

The 300 series is optimal for applications that cannot be handled by valves with rubber seats because of the temperature, pressure, fluid velocity or fluid itself. Two types are available: the 302Y with a metal seat for steam line applications and the 304Y with a PTFE seat for chemical line applications.

Pressure-Temperature Leakage Chart

302Y (metal seat type)

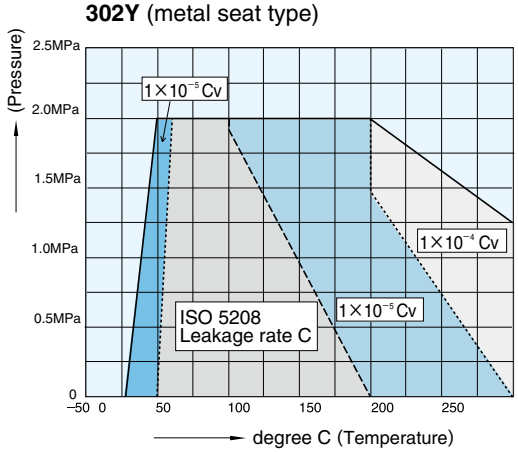

304Y (carbon-reinforced PTFE seat type)

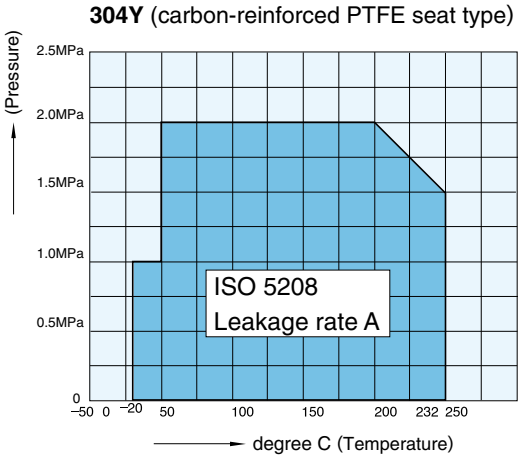

※ The operating range is the area within the thick lines

Standard Specifications

Valve type		302Y	304Y
Seat type		Metal seat type	PTFE seat type
Valve nominal size		40mm to 300mm	40mm to 300mm
Applicable flange standard ※1		JIS 50K/10K/16K/20K, ANSI 150lb, BS10 Table E/F, BS4504, PN 6/10/16, DIN NP 6/10/16 etc	
Face-to-face dimensions		JIS B 2002 (46 series) / ISO 5752 (20 series)	
Actuator mounting flange		ISO 5211	
Pressure rating		ANSI (B16.34, B16.42) Class 150 lb	
Max. working pressure		2.0MPa (250, 300mm: 1.6MPa)	2.0 MPa
Body shell test		Max. 3.0MPa	
Seat leak test		Max. 2.2MPa	
Flow direction		On the valve disc side: 2.0MPa On the valve stem side: 1.0MPa The max. pressure on the valve disc side for 250mm and 300mm valves is 1.6MPa	Bi-directional On the valve disc side: 2.0MPa
Seat leakage		ISO 5208 leakage rate C	ISO 5208 leakage rate A (tight shut-off)
Working temperature range		-20 to 250 degrees C	-20 to 200 degrees C
Standard materials	Body ※2	FCD450 (Tufftride treated) OR SCS13A	
	Disc	SCS13A (HdCr plating)	
	Stem	SUS420J2 or SUS3291J1	
	Seat ring	SUS316	RPTFE (with carbon graphite) or the optional specification PFA + PTFE (white)
	Gland packing	PTFE with carbon graphite	
Bonnet type		Open bonnet	
Actuators	Lock lever	40 to 150mm	
	Worm gear	40 to 300mm	
	Pneumatic cylinder	40 to 300mm	
	Motorised	40 to 300mm	
Coating		Under 200 degrees C: Modified silicon resin coating (Munsell N7). 200 degrees C and over: Heat resistant painting (silver). No painting for stainless steel.	

※1. 65mm is not applicable for BS 10 Table E.
※2. For size 40mm, only SCS13A is available for the body material.

302Y/304Y Expanded view of components

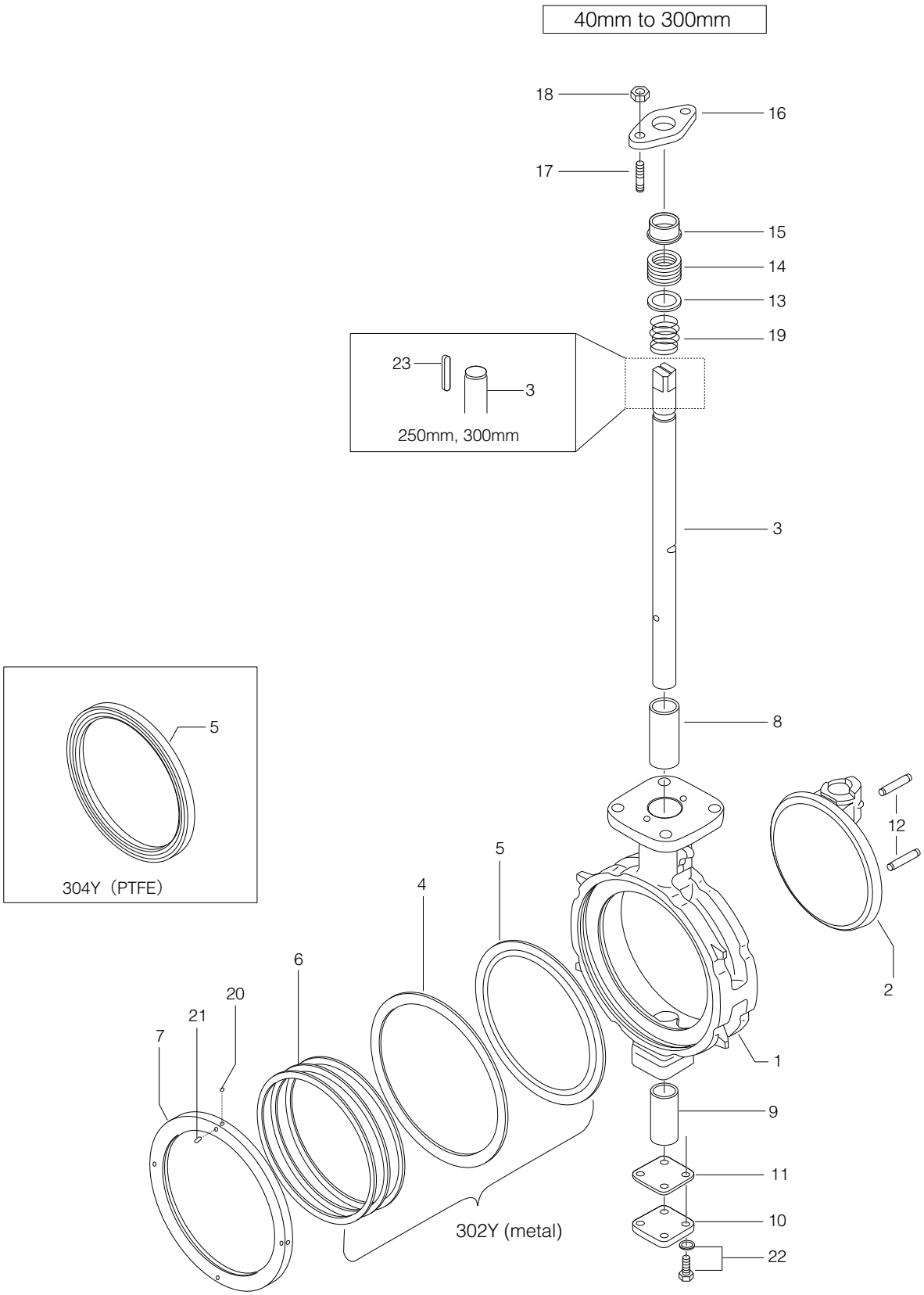

■302Y Parts list

No.	Description	Q'ty	Remarks
1	Body	1	
2	Disc	1	
3	Stem	1	
★ 4	Seat ring gasket	1	
★ 5	Seat ring	1	
★ 6	Back-up spring	2	40mm to 100mm
		3	125mm to 200mm
		4	250mm, 300mm
7	Seat ring retainer	1	
8	Top shaft bearing	1	
9	Bottom shaft bearing	1	
10	Bottom cover	1	
★ 11	Bottom gasket	1	
12	Taper pin	2	
13	Packing retainer	1	
★ 14	Gland packing	1 sets	
15	Rough gland	1	
16	Gland flange	1	
17	Gland bolt	2	
18	Gland nut	2	
19	Gland coil	1	Only 40mm to 150mm
★ 20	Ball	2	40mm to 125mm
		4	150mm to 300mm
★ 21	Set screw	2	40mm to 125mm
		4	150mm to 300mm
22	Hexagon bolt, Spring washer	4 sets	
23	Key	1	Only 250mm, 300mm

■304Y Parts list

No.	Description	Q'ty	Remarks
1	Body	1	
2	Disc	1	
3	Stem	1	
★ 5	Seat ring	1	
7	Seat ring retainer	1	
8	Top shaft bearing	1	
9	Bottom shaft bearing	1	
10	Bottom cover	1	
★ 11	Bottom gasket	1	
12	Taper pin	2	
13	Packing retainer	1	
★ 14	Gland packing	1 sets	
15	Gland bush	1	
16	Gland flange	1	
17	Gland bolt	2	
18	Gland nut	2	
19	Gland coil	1	Only 40mm to 150mm
★ 20	Ball	2	40mm to 125mm
		4	150mm to 300mm
★ 21	Set screw	2	40mm to 125mm
		4	150mm to 300mm
22	Hexagon bolt, Spring washer	4 sets	
23	Key	1	Only 250mm, 300mm

Remark: The ★ indicates recommended spare parts. They are supplied as "Seat ring set" with a small hexagonal spanner to remove set screws (P.21).

302Y Actuator selection chart

■302Y

Model	Category	Size (mm / inch)									
		40	50	65	80	100	125	150	200	250	300
		1 1/2	2	2 1/2	3	4	5	6	8	10	12
1T	T_L / T_H	1T-1			1T-2			1T-3			
2U,2S	T_L / T_H	2U-0	2U-1		2U-2		2U-3	2U-4	DGH-2	DGH-3	
7E,3A	T_L / T_H	T85		T200		T200	T380	T380	T750	TGA-125	
7G,7F 3U,3K	T_L / T_H	T200S			T380S		T750S	TG-12S		TG-14S	
4 I	T_L	4 I-0			4 I-2			4 I-2.5	4 I-3		4 I-4 (control)
	T_H			4 I-1							4 I-4
4J,4L	T_L / T_H	SRJ-010			SRJ-020			SRJ-060		LTKD-01 0.2kW/ DGH-3	

Remark: For the 300mm model with the accessories below (for control), type 4I-4 should be selected.

- Micom unit
- Servo unit
- Speed control unit
- Potentiometer

302Y Pressure rating

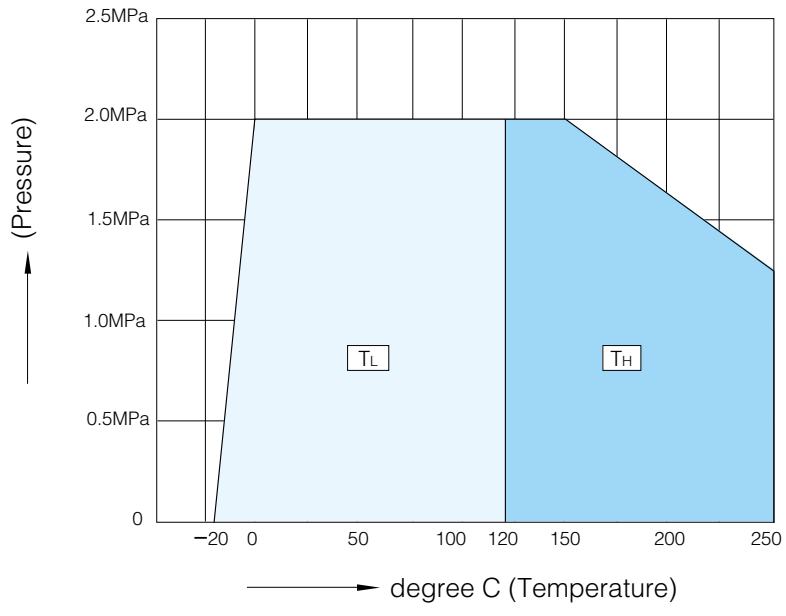

304Y Actuator selection chart

■304Y

Model	Category	Size (mm / inch)									
		40	50	65	80	100	125	150	200	250	300
		1 1/2	2	2 1/2	3	4	5	6	8	10	12
1T	T10 / T20	1T-1			1T-2			1T-3			
2U	T10 / T20	2U-0	2U-1		2U-2			2U-4		2U-5	
7E	T10 / T20	T35			T85		T200		T380	T750	
7G,7F 3U,3K	T10 / T20	T85S			T200S	T380S	T380S	T750S		TG-12S	
4 I	T10 / T20	4 I-0				4 I-1	4 I-2		4 I-2.5	4 I-3	
4J	T10 / T20	SRJ-010						SRJ-020	SRJ-060		

304Y Pressure rating

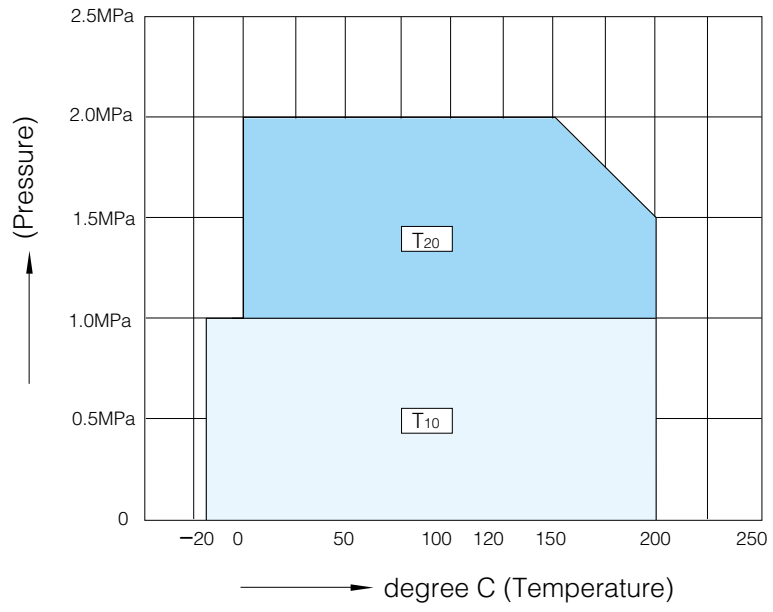

302Y/304Y Bare shaft (01: 40mm to 200mm, 02: 250mm, 300mm)

■302Y-01/02, 304Y-01/02

Stem design	Nominal size		Dimension (mm)														Approx. Mass (kg)
	mm	inch	φd	φD	L	L_2	H_1	H_2	a_1	a_2	□S_1	φd_2	b	t_2	t	Flange type	
01	40	1 1/2	48	81	33	15	64	118	47.5	11.5	8	10	–	–	12	F07	2.1
	50	2	60	97	43	21	74	125	47.5	11.5	10	12	–	–	12	F07	2.5
	65	2 1/2	74	117	46	22	85	138	47.5	11.5	12	14	–	–	12	F07	3.6
	80	3	89	127	46	21	95	147	52.5	16.5	14	16	–	–	15	F10	4.7
	100	4	112	152	52	22	110	170	52.5	16.5	14	16	–	–	15	F10	5.7
	125	5	137	183	56	24	139	185	52.5	16.5	16	20	–	–	15	F10	8.8
	150	6	163	213	57	23	164	205	55.5	20	18	22	–	–	15	F12	12
	200	8	213	263	62	26	190	235	63.0	30	24	28	–	–	15	F12	18
02	250	10	263	325	70	30	236	283	108.0	65	–	32	10	3	18	F14	32
	300	12	315	368	80	34	246	310	113.0	70	–	35	10	3	18	F14	39

Stem design	
	01 : Square
	02 : Round with key

■Top flange

Flange type	□S	φC_1	N	B.H.
F07	70	70	4	9
F10	102	102	4	11
F12	125	125	4	13
F14	140	140	4	19

■302Y/304Y 40mm to 200mm

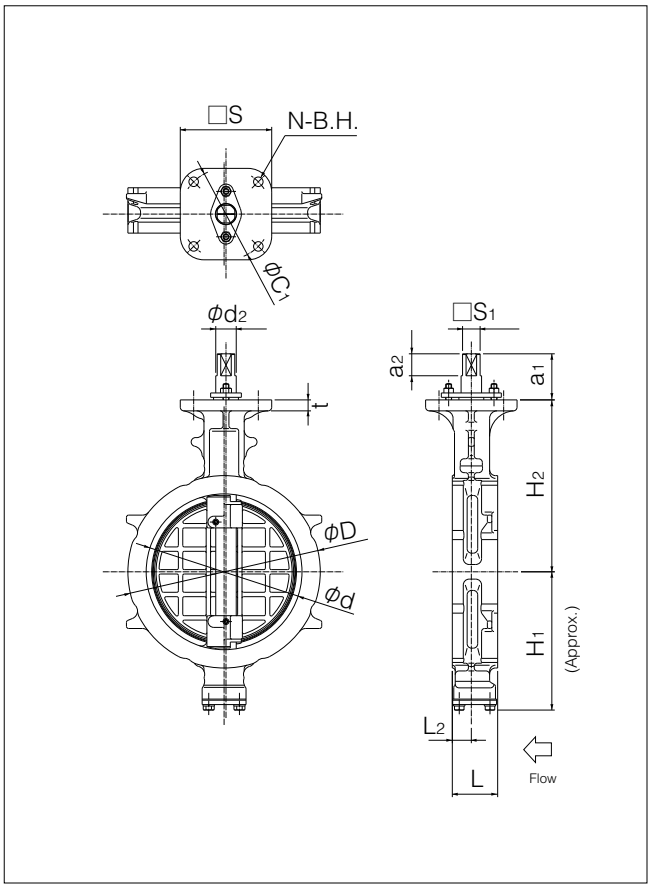

■302Y/304Y 250mm, 300mm

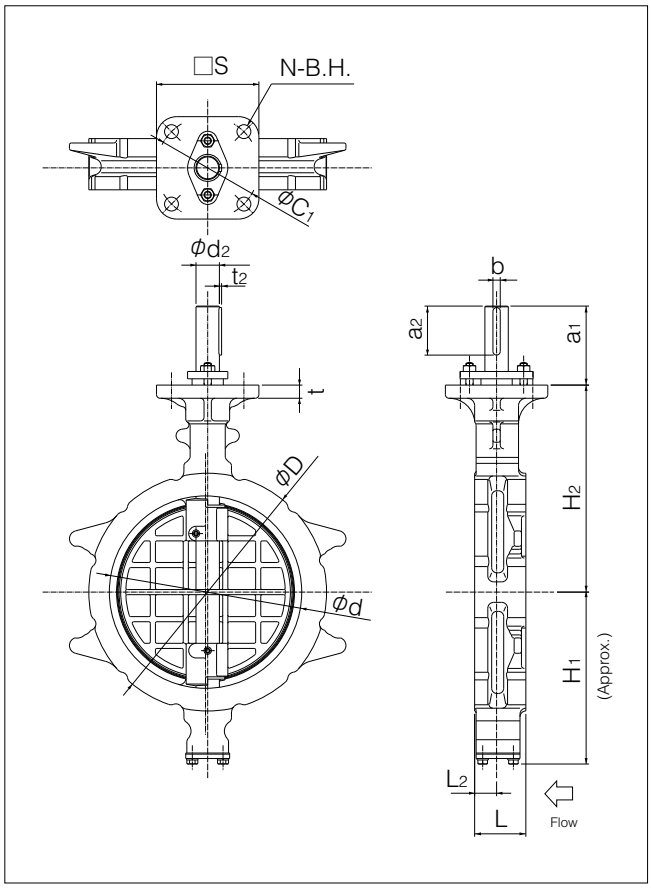

Lock lever type 302Y/304Y-1T(40mm to 150mm)

■302Y-1T, 304Y-1T

Nominal size		Dimension (mm)								Lever type	Approx. Mass (kg)
mm	inch	φd	φD	L	L_2	H_1	H_2	H_3	W		
40	1 1/2	48	81	33	15	64	118	91	200	1T-1	3.1
50	2	60	97	43	21	74	125	91	200	1T-1	3.5
65	2 1/2	74	117	46	22	85	138	91	200	1T-1	4.6
80	3	89	127	46	21	95	147	117	300	1T-2	6.8
100	4	112	152	52	22	110	170	117	300	1T-2	7.8
125	5	137	183	56	24	139	185	117	300	1T-2	10.9
150	6	163	213	57	23	164	205	125	350	1T-3	14.1

■302Y-1T, 304Y-1T

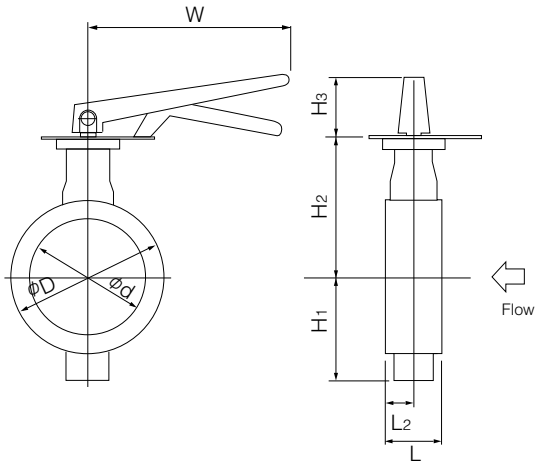

■1T Installation direction

Retainer side / Flow / Stem side	Retainer side / Flow / Stem side	Retainer side / Flow / Stem side	Retainer side / Flow / Stem side
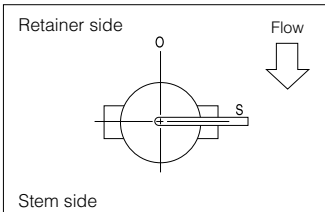	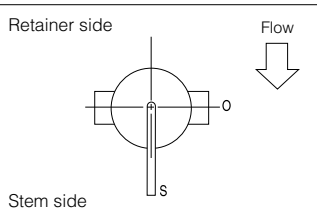	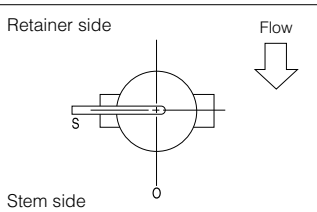	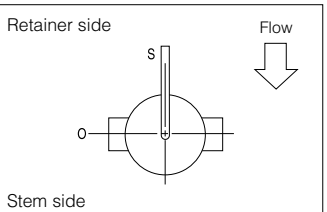
1TA	1TB	1TC	1TD

Worm gear type 302Y-2U(40mm to 150mm) / 302Y-2S (200mm to 300mm) / 304Y-2U(40mm to 300mm)

■302Y-2U(40mm to 150mm) / 2S (200mm to 300mm)

Nominal size		Dimension (mm)											Gear type	Approx. Mass (kg)
mm	inch	φd	φD	L	L_2	H_1	H_2	H_3	E	K	F	φW		
40	1 1/2	48	81	33	15	64	118	56	36	46	160	100	2U-0	5
50	2	60	97	43	21	74	125	56	36	46	160	100	2U-1	5.4
65	2 1/2	74	117	46	22	85	138	56	36	46	160	100	2U-1	6.5
80	3	89	127	46	21	95	147	61	44	53	173.5	160	2U-2	7.6
100	4	112	152	52	22	110	170	61	44	53	173.5	160	2U-2	8.6
125	5	137	183	56	24	139	185	68	67	75	198	200	2U-3	18
150	6	163	213	57	23	164	205	77.5	87.5	90	222.5	200	2U-4	28.5
200	8	213	263	62	26	190	235	72	85	126	246	280	DGH-2	38
250	10	263	325	70	30	236	283	97	117	164	335	355	DGH-3	69
300	12	315	368	80	34	246	310	97	117	164	335	355	DGH-3	76

■304Y-2U

Nominal size		Dimension (mm)											Gear type	Approx. Mass (kg)
mm	inch	φd	φD	L	L_2	H_1	H_2	H_3	E	K	F	φW		
40	1 1/2	48	81	33	15	64	118	56	36	46	160	100	2U-0	5
50	2	60	97	43	21	74	125	56	36	46	160	100	2U-1	5.4
65	2 1/2	74	117	46	22	85	138	56	36	46	160	100	2U-1	6.5
80	3	89	127	46	21	95	147	61	44	53	173.5	160	2U-2	7.6
100	4	112	152	52	22	110	170	61	44	53	173.5	160	2U-2	8.6
125	5	137	183	56	24	139	185	61	44	53	173.5	160	2U-2	11.9
150	6	163	213	57	23	164	205	77.5	87.5	90	222.5	200	2U-4	28.5
200	8	213	263	62	26	190	235	77.5	87.5	90	222.5	200	2U-4	34.5
250	10	263	325	70	30	236	283	90	87.5	90	222.5	280	2U-4	49.7
300	12	315	368	80	34	246	310	92	90	105	266	280	2U-5	61

■302Y-2U/2S
■304Y-2U

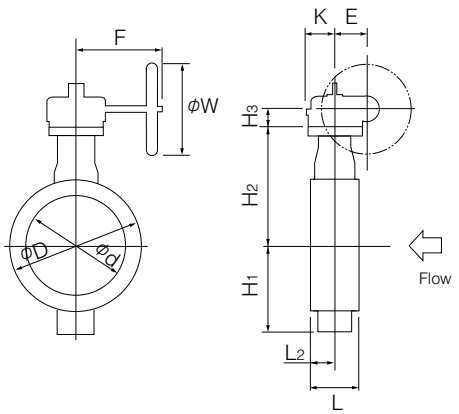

■2U/2S Installation direction

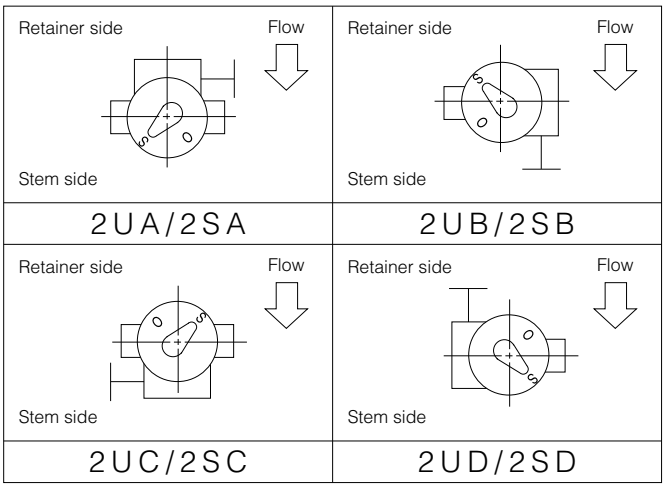

Double-acting pneumatic cylinder type 302Y-7E(40mm to 200mm) / 304Y-7E(40mm to 300mm)

■302Y-7E

Nominal size		Dimension (mm)													Cylinder type	Approx. Mass (kg)
mm	inch	Φd	ΦD	L	L_2	H_1	H_2	Category	H_3	H_4	A	P	f_1	f_2		
40	1 1/2	48	81	33	15	64	118	T_L,T_H	168	26.5	276	142	75	47	T85	8
50	2	60	97	43	21	74	125	T_L,T_H	168	26.5	276	142	75	47	T85	8
65	2 1/2	74	117	46	22	85	138	T_L	168	26.5	276	142	75	47	T85	9
								T_H	203	26.5	346	176	79	57	T200	13
80	3	89	127	46	21	95	147	T_L	168	26.5	276	142	75	47	T85	11
								T_H	203	26.5	346	176	79	57	T200	14
100	4	112	152	52	22	110	170	T_L	203	26.5	346	176	79	57	T200	15
								T_H	231	26.5	423	214	91	69	T380	21
125	5	137	183	56	24	139	185	T_L	203	26.5	346	176	79	57	T200	18
								T_H	231	26.5	423	214	91	69	T380	24
150	6	163	213	57	23	164	205	T_L	231	29.5	423	214	91	69	T380	28
								T_H	269	29.5	546	270	118	85	T750	38
200	8	213	263	62	26	190	235	T_L,T_H	269	29.5	546	270	118	85	T750	44

■304Y-7E

Nominal size		Dimension (mm)													Cylinder type	Approx. Mass (kg)
mm	inch	Φd	ΦD	L	L_2	H_1	H_2	Category	H_3	H_4	A	P	f_1	f_2		
40	1 1/2	48	81	33	15	64	118	T_{10},T_{20}	125	26.5	228	116	57	29	T35	5
50	2	60	97	43	21	74	125	T_{10},T_{20}	125	26.5	228	116	57	29	T35	5
65	2 1/2	74	117	46	22	85	138	T_{10}	125	26.5	228	116	57	29	T35	6
								T_{20}	168	26.5	276	142	75	47	T85	9
80	3	89	127	46	21	95	147	T_{10},T_{20}	168	26.5	276	142	75	47	T85	11
100	4	112	152	52	22	110	170	T_{10}	168	26.5	276	142	75	47	T85	12
								T_{20}	203	26.5	346	176	79	57	T200	15
125	5	137	183	56	24	139	185	T_{10},T_{20}	203	26.5	346	176	79	57	T200	18
150	6	163	213	57	23	164	205	T_{10},T_{20}	203	29.5	346	176	79	57	T200	22
200	8	213	263	62	26	190	235	T_{10},T_{20}	231	29.5	423	214	91	69	T380	34
250	10	263	325	70	30	236	283	T_{10}	231	190	423	214	91	87.5	T380	62
								T_{20}	269	190	546	270	118	87.5	T750	72
300	12	315	368	80	34	246	310	T_{10},T_{20}	269	190	546	270	118	87.5	T750	79

■302Y/304Y-7E

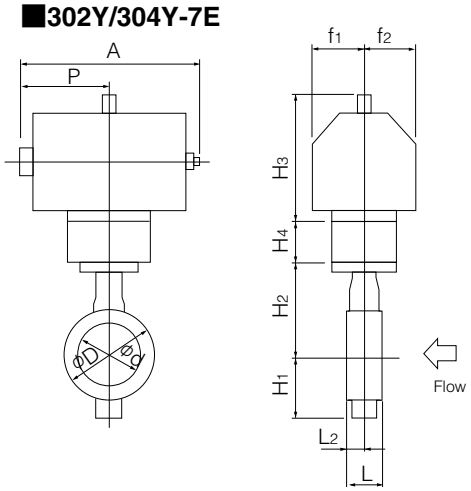

■7E Installation direction

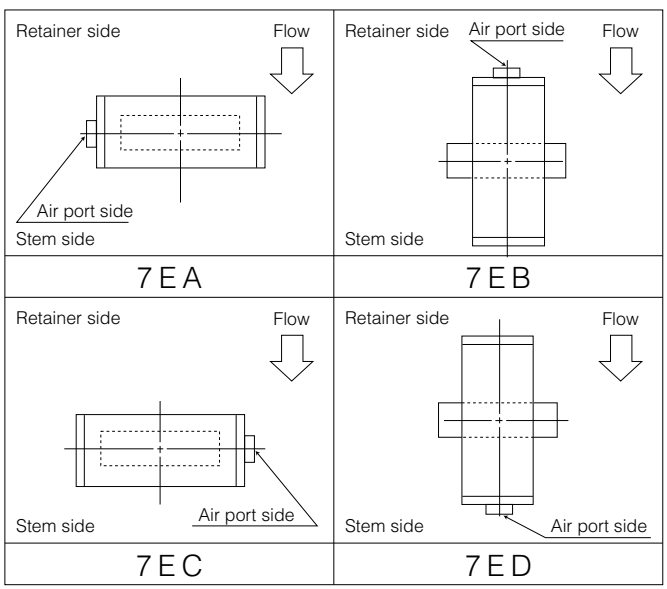

Double-acting pneumatic cylinder type 302Y-3A (250, 300mm)

■302Y-3A

Nominal size		Dimension (mm)												Cylinder type	Approx. Mass (kg)
mm	inch	φd	φD	L	L_2	H_1	H_2	Category	H_3	A	P	f_1	f_2		
250	10	263	325	70	30	236	283	T_L,T_H	424	754	381	71	167	TGA-125	78
300	12	315	368	80	34	246	310	T_L,T_H	424	754	381	71	167	TGA-125	85

■302Y-3A

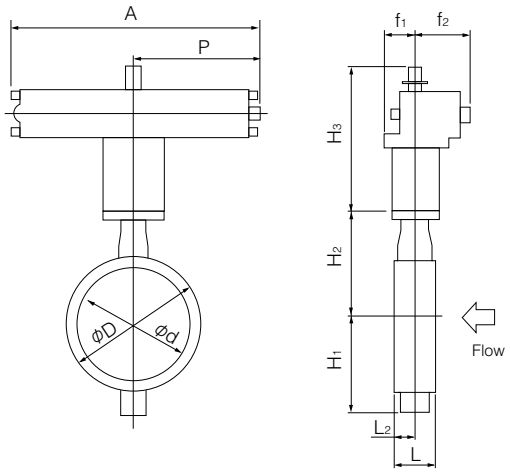

■3A Installation direction

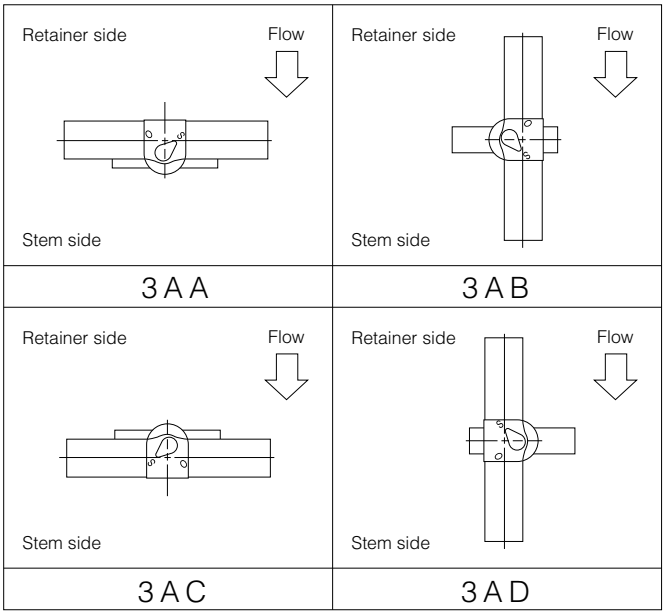

■304A-7F

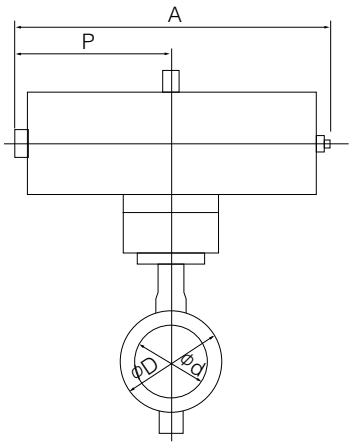

■304A-7G

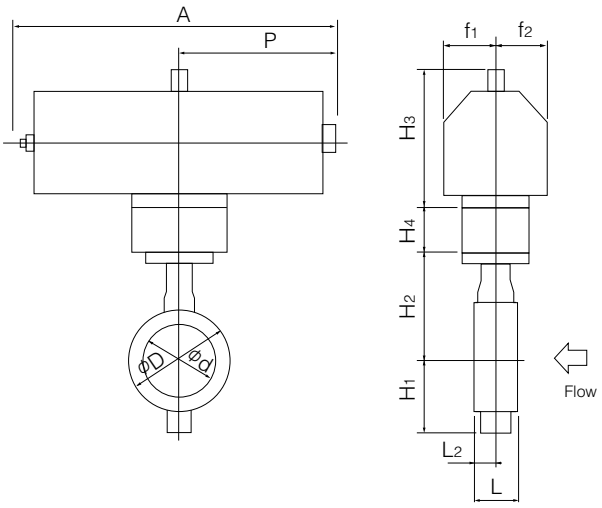

■302Y-7G/7F

Nominal size		Dimension (mm)													Cylinder type	Approx. Mass (kg)
mm	inch	φd	φD	L	L_2	H_1	H_2	Category	H_3	H_4	A	P	f_1	f_2		
40	1 1/2	48	81	33	15	64	118	T_L,T_H	203	26.5	449	226	79	57	T200S	14
50	2	60	97	43	21	74	125	T_L	203	26.5	449	226	79	57	T200S	14
								T_H	231	26.5	550	276	91	69	T380S	23
65	2 1/2	74	117	46	22	85	138	T_L	203	26.5	449	226	79	57	T200S	15
								T_H	231	26.5	550	276	91	69	T380S	24
80	3	89	127	46	21	95	147	T_L,T_H	231	26.5	550	276	91	69	T380S	25
100	4	112	152	52	22	110	170	T_L	231	26.5	550	276	91	69	T380S	26
								T_H	269	26.5	723	360	118	85	T750S	40
125	5	137	183	56	24	139	185	T_L,T_H	269	26.5	723	360	118	85	T750S	43
150	6	163	213	57	23	164	205	T_L	269	29.5	723	360	118	85	T750S	47

■304Y-7G/7F

Nominal size		Dimension (mm)													Cylinder type	Approx. Mass (kg)
mm	inch	φd	φD	L	L_2	H_1	H_2	Category	H_3	H_4	A	P	f_1	f_2		
40	1 1/2	48	81	33	15	64	118	T_{10},T_{20}	168	26.5	364	183	75	47	T85S	10
50	2	60	97	43	21	74	125	T_{10},T_{20}	168	26.5	364	183	75	47	T85S	10
65	2 1/2	74	117	46	22	85	138	T_{10}	168	26.5	364	183	75	47	T85S	11
								T_{20}	203	26.5	449	226	79	57	T200S	15
80	3	89	127	46	21	95	147	T_{10},T_{20}	203	26.5	449	226	79	57	T200S	17
100	4	112	152	52	22	110	170	T_{10}	203	26.5	449	226	79	57	T200S	18
								T_{20}	231	26.5	550	276	91	69	T380S	26
125	5	137	183	56	24	139	185	T_{10}	231	26.5	550	276	91	69	T380S	29
								T_{20}	269	26.5	723	360	118	85	T750S	43
150	6	163	213	57	23	164	205	T_{10},T_{20}	269	29.5	723	360	118	85	T750S	47
200	8	213	263	62	26	190	235	T_{10}	269	29.5	723	360	118	85	T750S	53

■7F Installation direction

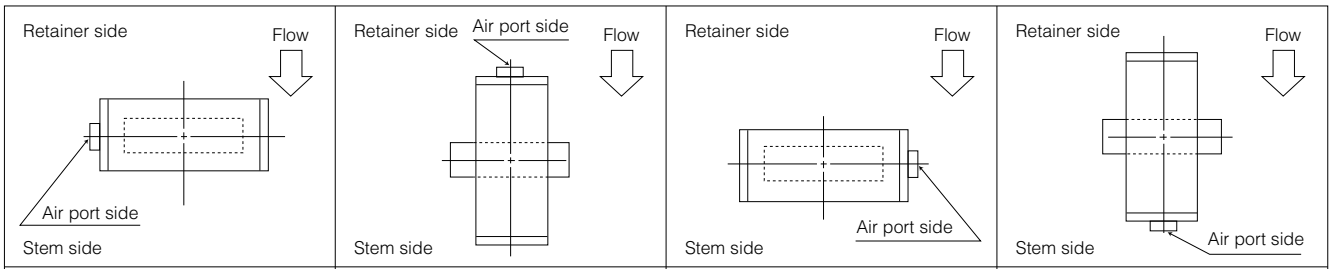

■7G Installation direction

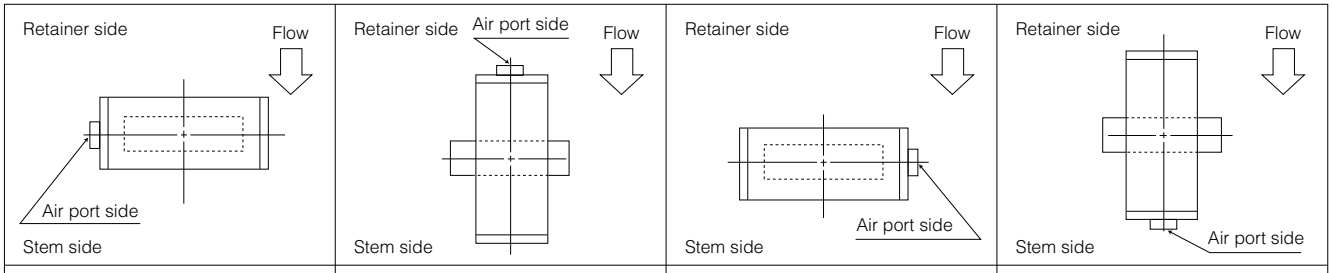

Single-acting pneumatic cylinder type 302Y-3U(Air to open: 150mm to 300mm) / 302Y-3K(Air to close: 150mm to 300mm)
304Y-3U(Air to open: 200mm to 300mm) / 304Y-3K(Air to close: 200mm to 300mm)

■302Y-3U/3K

Nominal size		Dimension (mm)												Cylinder type	Approx. Mass (kg)
mm	inch	φd	φD	L	L_2	H_1	H_2	Category	H_3	A	P	f_1	f_2		
150	6	163	213	57	23	164	205	T_L	377	945	585	75	165	TG-10S	70
								T_H	377	1080	720	94	206	TG-12S	116
200	8	213	263	62	26	190	235	T_L,T_H	377	1080	720	94	206	TG-12S	122
250	10	263	325	70	30	236	283	T_L,T_H	450	1255	865	131	257	TG-14S	238
300	12	315	368	80	34	246	310	T_L,T_H	450	1255	865	131	257	TG-14S	245

■304Y-3U/3K

Nominal size		Dimension (mm)												Cylinder type	Approx. Mass (kg)
mm	inch	φd	φD	L	L_2	H_1	H_2	Category	H_3	A	P	f_1	f_2		
200	8	213	263	62	26	190	235	T_{10}	377	945	585	75	165	TG-10S	77
								T_{20}	377	1080	720	94	206	TG-12S	122
250	10	263	325	70	30	236	283	T_{10},T_{20}	417	1080	720	94	206	TG-12S	137
300	12	315	368	80	34	246	310	T_{10},T_{20}	417	1080	720	94	206	TG-12S	144

■302Y/304Y-3K

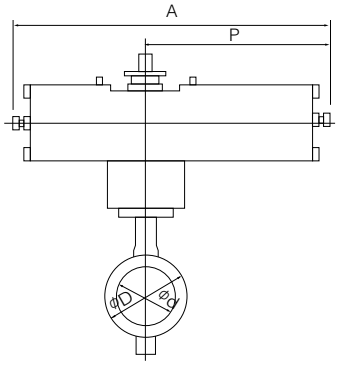

■302Y/304Y-3U

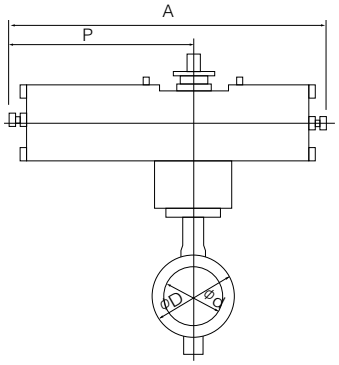

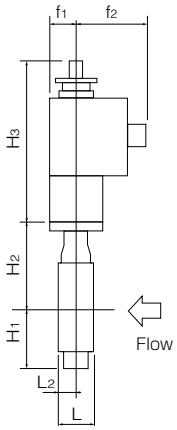

■3K Installation direction

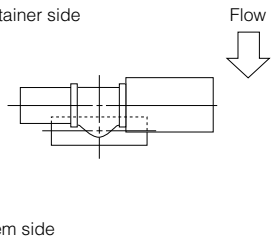	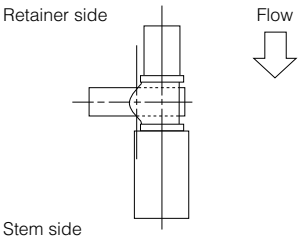	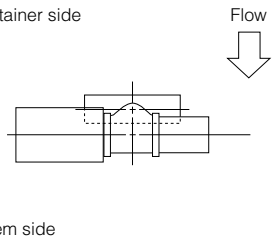	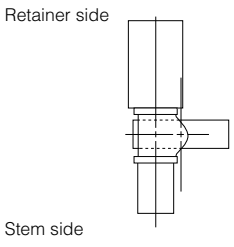
Retainer side / Flow / Stem side	Retainer side / Flow / Stem side	Retainer side / Flow / Stem side	Retainer side / Flow / Stem side
3KA	3KB	3KC	3KD

■3U Installation direction

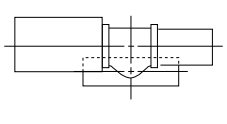	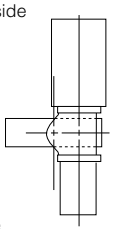	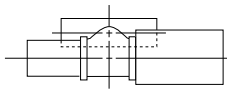	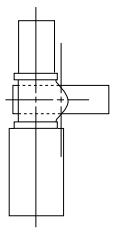
Retainer side / Flow / Stem side	Retainer side / Flow / Stem side	Retainer side / Flow / Stem side	Retainer side / Flow / Stem side
3UA	3UB	3UC	3UD

Single phase electric motor type 302Y/304Y-4 I (40mm to 300mm)

■302Y-4 I

Nominal size		Dimension (mm)												Motor type	Approx. Mass (kg)
mm	inch	φd	φD	L	L_2	H_1	H_2	Category	H_3	A	P	F	K		
40	1 1/2	48	81	33	15	64	118	T_L,T_H	250	202	100	85	54	4 I-0	9.4
50	2	60	97	43	21	74	125	T_L,T_H	250	202	100	85	54	4 I-0	9.8
65	2 1/2	74	117	46	22	85	138	T_L	250	202	100	85	54	4 I-0	10.8
								T_H	265	252	138	126	65	4 I-1	13
80	3	89	127	46	21	95	147	T_L,T_H	298	310	167	154	85	4 I-2	20
100	4	112	152	52	22	110	170	T_L,T_H	298	310	167	154	85	4 I-2	21
125	5	137	183	56	24	139	185	T_L,T_H	298	310	167	154	85	4 I-2	24
150	6	163	213	57	23	164	205	T_L,T_H	373	310	167	154	85	4 I-2.5	31
200	8	213	263	62	26	190	235	T_L,T_H	405	388	223	246	136	4 I-3	48
250	10	263	325	70	30	236	283	T_L,T_H	420	388	223	246	136	4 I-3	65
300	12	315	368	80	34	246	310	$T_{L(Remark)}$	420	388	223	246	136	4 I-3	72
								T_H	423	388	223	246	136	4 I-4	77

Remark: For the 300mm model with the accessories on the right (for control) type 4I-4 should be selected. ●Micom unit ●Servo unit ●Speed control unit ●Potentiometer

■304Y-4 I

Nominal size		Dimension (mm)												Motor type	Approx. Mass (kg)
mm	inch	φd	φD	L	L_2	H_1	H_2	Category	H_3	A	P	F	K		
40	1 1/2	48	81	33	15	64	118	T_{10},T_{20}	250	202	100	85	54	4 I-0	9.4
50	2	60	97	43	21	74	125	T_{10},T_{20}	250	202	100	85	54	4 I-0	9.8
65	2 1/2	74	117	46	22	85	138	T_{10},T_{20}	250	202	100	85	54	4 I-0	10.8
80	3	89	127	46	21	95	147	T_{10},T_{20}	250	202	100	85	54	4 I-0	11.8
100	4	112	152	52	22	110	170	T_{10}	265	252	138	126	65	4 I-1	15
								T_{20}	298	310	167	154	85	4 I-2	21
125	5	137	183	56	24	139	185	T_{10},T_{20}	298	310	167	154	85	4 I-2	24
150	6	163	213	57	23	164	205	T_{10},T_{20}	373	310	167	154	85	4 I-2	29
200	8	213	263	62	26	190	235	T_{10},T_{20}	373	310	167	154	85	4 I-2.5	38
250	10	263	325	70	30	236	283	T_{10}	411	310	167	154	85	4 I-2.5	55.5
								T_{20}	420	388	223	246	136	4 I-3	65
300	12	315	368	80	34	246	310	T_{10},T_{20}	420	388	223	246	136	4 I-3	72

■302Y/304Y-4 I

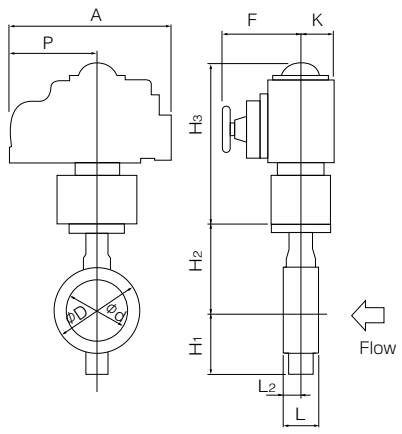

■4 I Installation direction

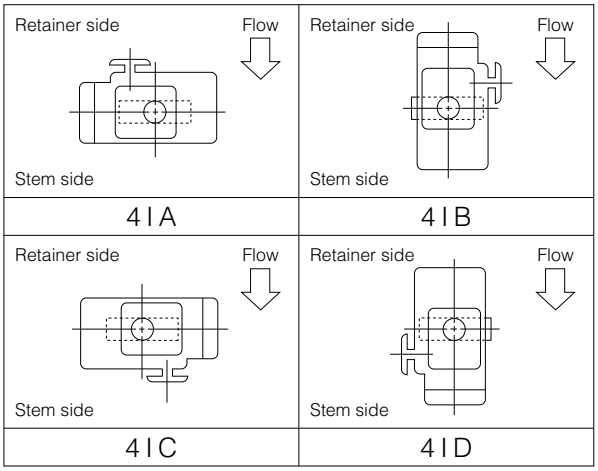

Three phase motor actuator type 302Y-4L(250mm, 300mm)

■302Y-4L

Nominal size		Dimension (mm)													Motor type	Approx. Mass (kg)
mm	inch	φd	φD	L	L_2	H_1	H_2	Category	H_3	E	K	F	M	P		
250	10	263	325	70	30	236	283	T_L,T_H	547	117	164	533	357	230	LTKD-01 0.2kW/ DGH-3	123
300	12	315	368	80	34	246	310	T_L,T_H	547	117	164	533	357	230	LTKD-01 0.2kW/ DGH-3	130

■302Y-4L

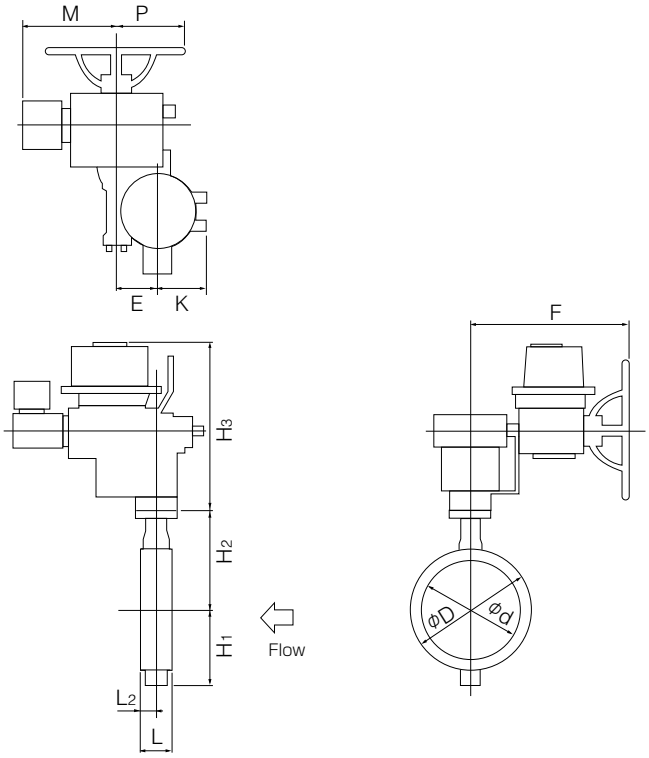

■4L Installation direction

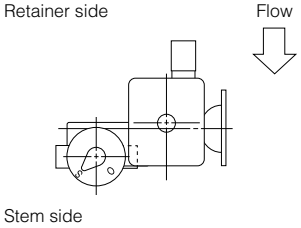	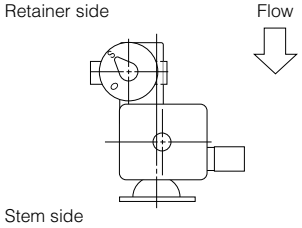	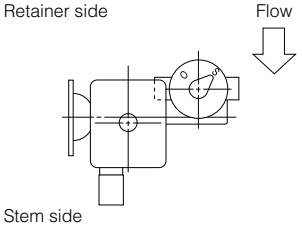	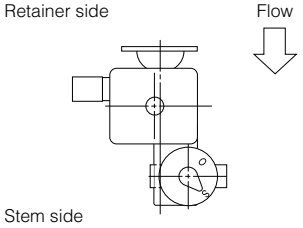
4LA	4LB	4LC	4LD

302Y/304Y Cv value/pressure loss coefficient

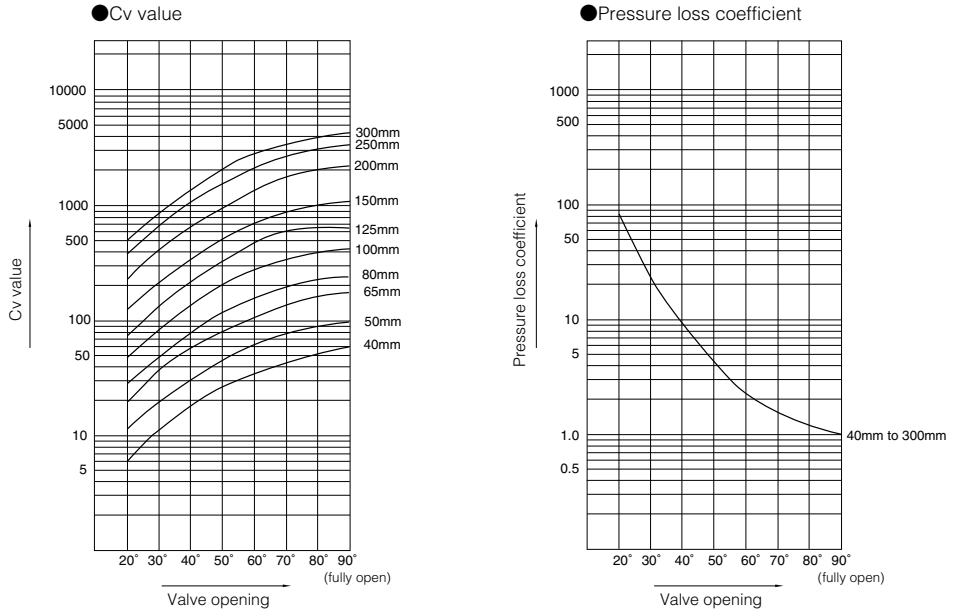

302Y/304Y Cv value

Nominal size		Valve opening							
mm	inch	20°	30°	40°	50°	60°	70°	80°	90°
40	1 1/2	6	12	20	30	39	49	57	60
50	2	11	21	33	49	64	80	95	99
65	2 1/2	20	37	59	86	112	140	168	176
80	3	29	54	84	123	161	207	244	252
100	4	48	90	143	209	277	351	415	432
125	5	76	143	229	336	438	551	653	684
150	6	129	225	372	531	722	898	1075	1116
200	8	240	422	700	990	1361	1690	1982	2070
250	10	400	704	1157	1650	2255	2826	3298	3443
300	12	505	890	1465	2084	2860	3568	4178	4354

302Y/304Y Pressure loss coefficient

Nominal size		Valve opening							
mm	inch	20°	30°	40°	50°	60°	70°	80°	90°
40	1 1/2	184	72	16	7	4	3	2	2
50	2	142	38	15	7	4	3	2	2
65	2 1/2	116	33	13	6	4	2	2	1
80	3	111	32	13	6	4	2	2	1
100	4	117	33	13	6	3	2	2	1
125	5	110	31	12	6	3	2	1	1
150	6	75	24	9	4	2	2	1	1
200	8	65	21	8	4	2	1	1	1
250	10	56	18	7	3	2	1	1	1
300	12	72	23	9	4	2	1	1	1

302Y/304Y Applicable pipe list in case of A

Nominal size		SGP		Sch20		Sch40		Sch60		Sch80		Sch10S		Sch20S		Minimum internal diameters of piping (mm)
mm	inch	Retainer (up stream)	Stem Side (down stream)	Retainer (up stream)	Stem Side (down stream)	Retainer (up stream)	Stem Side (down stream)	Retainer (up stream)	Stem Side (down stream)	Retainer (up stream)	Stem Side (down stream)	Retainer (up stream)	Stem Side (down stream)	Retainer (up stream)	Stem Side (down stream)	
40	1 1/2	○	○	—	—	○	○	○	○	○	○	○	○	○	○	32.7
50	2	○	○	○	○	○	○	○	○	○	○	○	○	○	○	34.6
65	2 1/2	○	○	○	○	○	○	○	○	○	○	○	○	○	○	53.6
80	3	○	○	○	○	○	○	○	○	○	○	○	○	○	○	72.5
100	4	○	○	○	○	○	○	○	○	○	○	○	○	○	○	93.8
125	5	○	○	○	○	○	○	○	○	○	○	○	○	○	○	119.4
150	6	○	○	○	○	○	○	○	×	○	×	○	○	○	○	147.5
200	8	○	○	○	○	○	○	○	×	○	×	○	○	○	○	197.5
250	10	○	○	○	○	○	○	○	×	○	×	○	○	○	○	248.1
300	12	○	○	○	○	○	○	○	×	×	×	○	○	○	○	297.6

302Y/304Y Applicable pipe list in case of B

Nominal size		SGP		Sch20		Sch40		Sch60		Sch80		Sch10S		Sch20S		Minimum internal diameters of piping (mm)
mm	inch	Retainer (up stream)	Stem Side (down stream)	Retainer (up stream)	Stem Side (down stream)	Retainer (up stream)	Stem Side (down stream)	Retainer (up stream)	Stem Side (down stream)	Retainer (up stream)	Stem Side (down stream)	Retainer (up stream)	Stem Side (down stream)	Retainer (up stream)	Stem Side (down stream)	
40	1 1/2	○	○	—	—	○	○	○	○	○	○	○	○	○	○	20.0
50	2	○	○	○	○	○	○	○	○	○	○	○	○	○	○	25.0
65	2 1/2	○	○	○	○	○	○	○	○	○	○	○	○	○	○	40.0
80	3	○	○	○	○	○	○	○	○	○	○	○	○	○	○	63.6
100	4	○	○	○	○	○	○	○	○	○	○	○	○	○	○	87.0
125	5	○	○	○	○	○	○	○	○	○	○	○	○	○	○	112.8
150	6	○	○	○	○	○	○	○	○	○	○	○	○	○	○	142.5
200	8	○	○	○	○	○	○	○	×	○	×	○	○	○	○	193.3
250	10	○	○	○	○	○	○	○	×	○	×	○	○	○	○	248.1
300	12	○	○	○	○	○	○	○	×	○	×	○	○	○	○	297.6

Remark 1: ○=Applicable ×=Not applicable
Remark 2: The clearance between the disc and the pipe is based on API 609 and MSS SP-67.
40mm to 150mm: 1.5mm; 200mm to 300mm: 3.0mm
Remark 3: Butterfly valves are inserted into a pipe that was fitted with the disc when fully open.
In cases where there is an "X" in the chart above or you are using a pipe or flange that is less than the minimum inner pipe diameter, use is still possible if means are taken such as inserting a spacer between the valve and flange.
For details, please consult us.

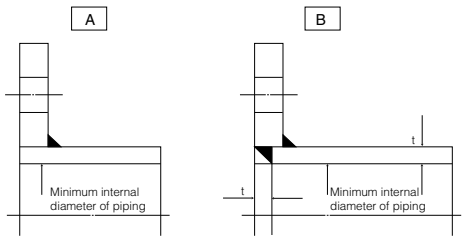

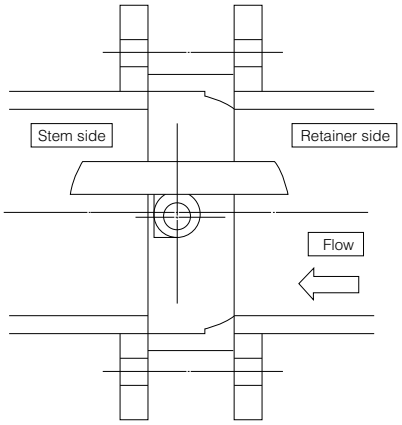

●In case of sheet gasket ..... Any standard can be used.
●In case of spiral gasket ..... Use special spiral gasket shown below.

■Special spiral gasket for JIS flange size

Nominal size		JIS flange					ANSI flange				
		10K, 16K, 20K			10K	16K, 20K	150-300Lb			150Lb	300Lb
mm	inch	D_1	D_2	D_3	D_4	D_4	D_1	D_2	D_3	D_4	D_4
40	1 1/2	48	54	73	89	89	48	54	73	85	95
50	2	61	69	88	104	104	61	69	88	104	111
65	2 1/2	73	81	100	124	124	73	81	100	123	129
80	3	89	97	120	134	140	89	97	120	136	148
100	4	115	124	146	159	165	115	124	146	174	180
125	5	140	151	177	190	203	140	151	177	196	215
150	6	166	178	207	220	238	166	178	207	222	250
200	8	217	227	257	270	283	217	229	257	279	307
250	10	268	282	318	333	356	268	285	318	339	362
300	12	319	331	362	378	406	319	335	362	409	422

Remark : In case a minute leakage of gas (less than 100PPm) becomes a problem, please consult our sales staff.

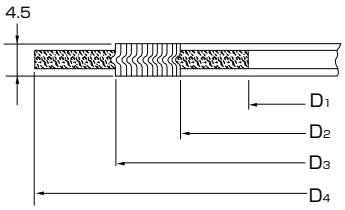

■Applicable standard for standard piping gasket

Nominal size		Max.allowable inside diameter (D)	Joint sheet or RPTFE solid gasket (t≦2mm)					PTFE mold type gasket Valqua: 7030, 7031or 7035				
mm	inch		JIS 5K	JIS 10K	JIS 16K JIS 20K	ANSI 150-300Lb	JPI 150-300Lb	JIS 5K	JIS 10K	JIS 16K JIS 20K	ANSI 150-300Lb	JPI 150-300Lb
40	1 1/2	55	○	○	○	○	○	○	○	○	○	○
50	2	69	○	○	○	○	○	○	○	○	○	○
65	2 1/2	81	○	○	○	○	○	×	×	×	○	○
80	3	97	○	○	○	○	○	○	○	○	○	○
100	4	124	○	○	○	○	○	○	○	○	○	○
125	5	151	○	○	○	○	○	○	○	○	○	○
150	6	178	○	○	○	○	○	○	○	○	○	○
200	8	227	○	○	○	○	○	○	○	○	○	○
250	10	282	○	○	○	○	○	○	○	○	○	○
300	12	331	○	○	○	○	○	○	○	○	○	○

Remark; ○: Applicable, ×: Not applicable

302Y/304Y Applicable flange standard

Nominal size		JIS				ANSI 150Lb	BS4504		DIN		BS10
mm	inch	5K	10K	16K	20K		PN10	PN16	NP10	NP16	Table E
40	1 1/2	○	○	○	○	○	○	○	○	○	○
50	2	○	○	○	○	○	○	○	○	○	○
65	2 1/2	○	○	○	○	○	○	○	○	○	×
80	3	○	○	○	○	○	○	○	○	○	○
100	4	○	○	○	○	○	○	○	○	○	○
125	5	○	○	○	○	○	○	○	○	○	○
150	6	○	○	○	○	○	○	○	○	○	○
200	8	○	○	○	○	○	○	○	○	○	○
250	10	○	○	○	○	○	○	○	○	○	○
300	12	○	○	○	○	○	○	○	○	○	○

○ : Can be used without flange drilling.
× : Not applicable

302Y/304Y Piping bolts and nuts sizes

Nominal size		JIS5K	JIS10K	JIS16K/20K	ANSI150Lb
mm	inch	Long bolts and nuts	Long bolts and nuts	Long bolts and nuts	Long bolts and nuts
40	1 1/2	4-M12×100	4-M16×120	4-M16×120	4-U1/2-13UNC×115
50	2	4-M12×120	4-M16×130	8-M16×130	4-U5/8-11UNC×140
65	2 1/2	4-M12×120	4-M16×145	8-M16×145	4-U5/8-11UNC×155
80	3	4-M16×130	8-M16×145	8-M20×170	4-U5/8-11UNC×155
100	4	8-M16×145	8-M16×145	8-M20×170	8-U5/8-11UNC×155
125	5	8-M16×145	8-M20×170	8-M22×190	8-U3/4-10UNC×175
150	6	8-M16×145	8-M20×170	12-M22×190	8-U3/4-10UNC×175
200	8	8-M20×170	12-M20×170	12-M22×190	8-U3/4-10UNC×205
250	10	12-M20×190	12-M22×190	12-M24×210	12-U7/8- 9UNC×215
300	12	12-M20×190	16-M22×190	16-M24×225	12-U7/8- 9UNC×215

Remark: Use SNB7/S45C (A193 B7/A194 2H) SS400/SS400, SUS304/SUS304.
SS400 can be used with JIS5K/10K flanges 220 degrees C and below.
Long bolt uses full threaded bolt.
Hexagon nut uses heavy nut.

Example

Long bolts: 12 - M22 × 185
N M L

Long bolts and nuts (full thread)

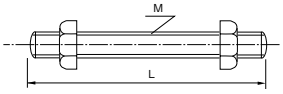

MEMO

HLV304M

Custom-made design available!

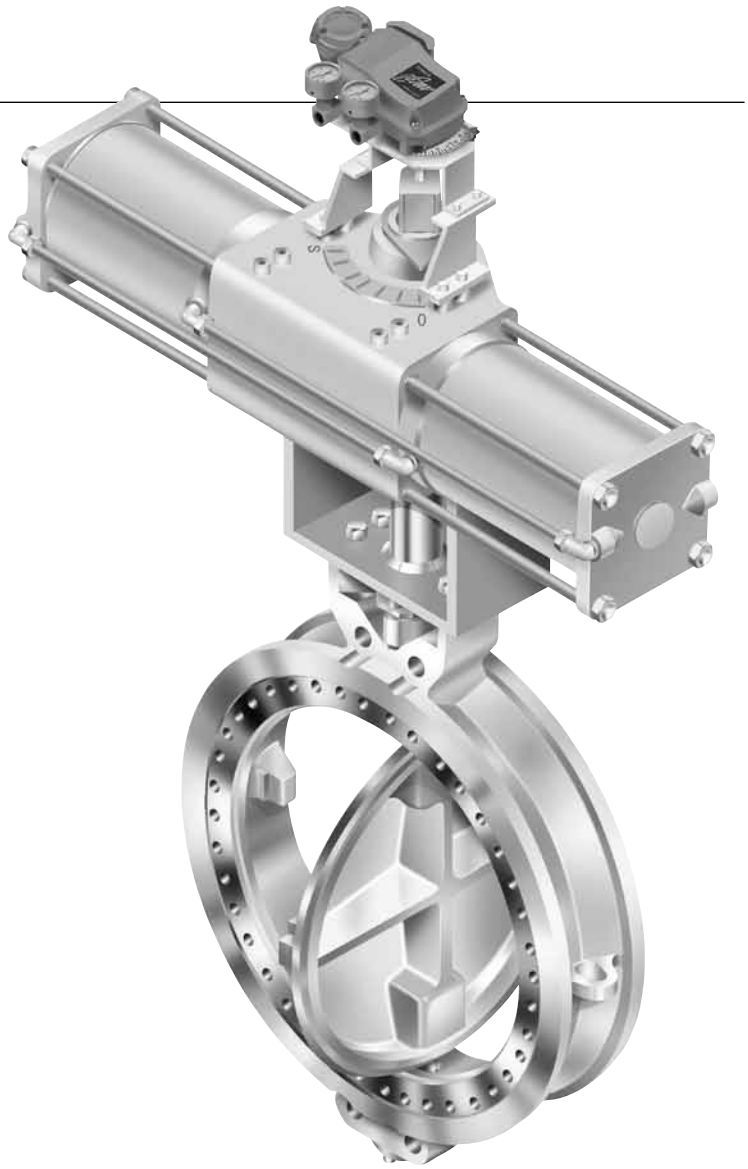

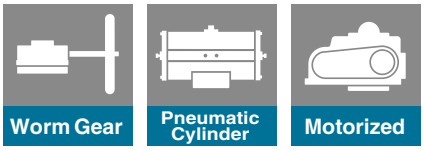

Characteristics

Suitable for high-temperature, medium-to low- pressure service, such as in hot air, exhaust gas, steam, chemical fluids, and solvents.

Compact Design

Short pattern face to face dimensions. The body and disc design contributed to a valve that is lower in weight and more compact than other valves of this type.

Double Offset Geometry

The axis of disc rotation is double offset to the seat. When the disc rotates, it unseats at a small turning angle by its cam effect. This prevents seat wear and provides reliable sealing performance over a long period.

Simple Sealing Design/Reliable Performance

The simple sealing design with a minimal number of parts allows easy maintenance without special tools. Tight shut off with an RPTFE seat is available. See PT rating chart.

Custom-Made Design

Custom made designs, including the use of special materials, a double flanged body or special face to face dimensions are available upon request. A metal seat type is also available.

304M PT Rating (RTFE SEAT)

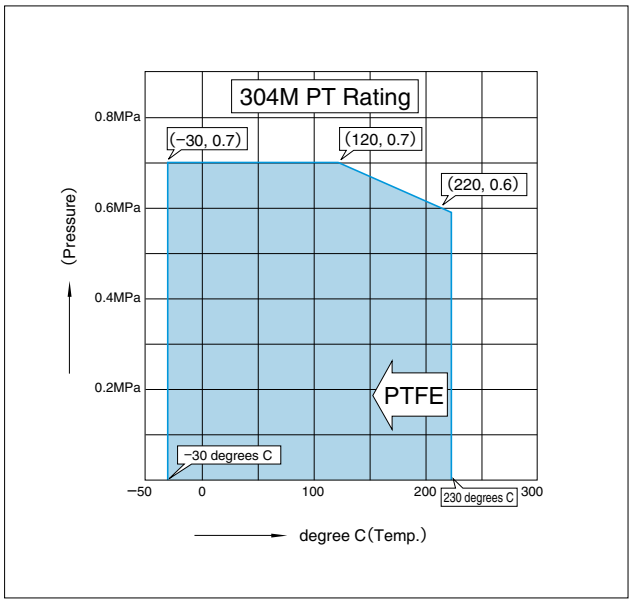

※No actuator extension bonnet is required.

304M Cv Value

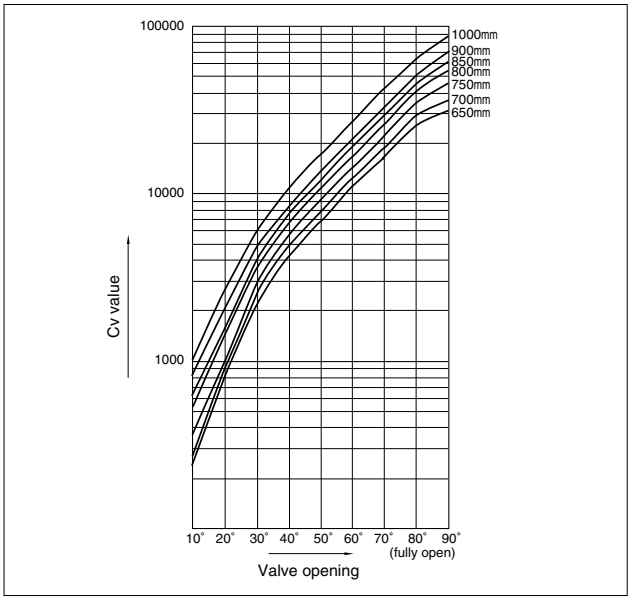

Standard Specifications

Valve model		304M
Valve size		650, 700, 750, 800, 850, 900, 1000mm
Face to face dimensions		Manufacturer's standard
Applicable flange standard		JIS 5K, 10K, ASME B16.47 Class 150 Series A or B, DIN/BS NP/PN10
Standard materials	Body	Carbon steel casting (SCPH2/WCB) with Mn3 (PO4) 2 treatment, Stainless steel casting (SCS13A/CF8, SCS14A/CF8M)
	Disc	Stainless steel casting (SCS13A/CF8 with Cr.plating, SCS14A/CF8M with Cr. plating)
	Stem	Stainless steel type 431, 630, 316
	Seat	RPTFE
	Gland packing	Carbon graphite
Max.working pressure*		0.7MPa (0.2MPa on non-prefered direction)
Working temperature range*		−30 to 230 degrees C
Seat leakage		Working pressure x 1.1 times (Max 0.8Mpa)
Flow direction		Flow to shaft side is recommended.
Marking		API609/MSS-SP25/JIS B 2004
Piping flange gasket		Serrated spiral 45 to 55 groove/inch for gasket face finish, unless otherwise specified

*Recommended piping position: shaft horizontal position
*Max. working pressure & temperature range are subject to change depending on customized specifications.

※It is possible that seat leakage occur when fluid (e.g. powder and/or liquid) is solidified by working temperature and other cause. Consult us.
Please note that use with vertical line such as bottom area of discharge spout of hopper, and tank.

HLV 304M Principal dimensions

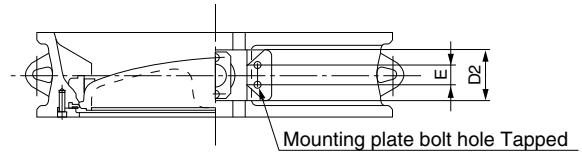

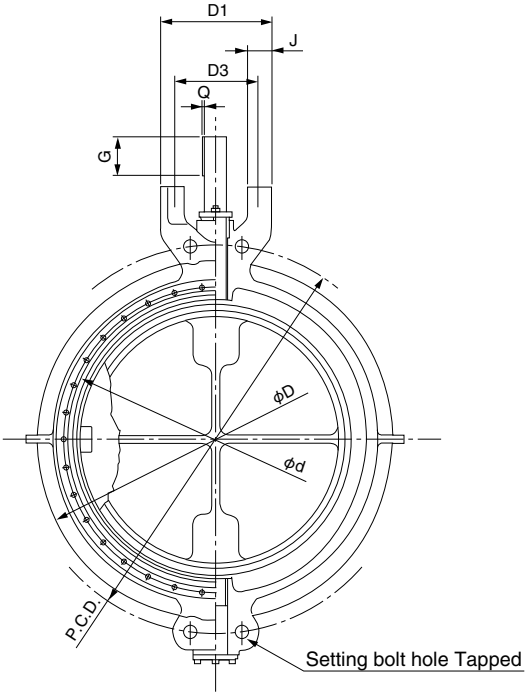

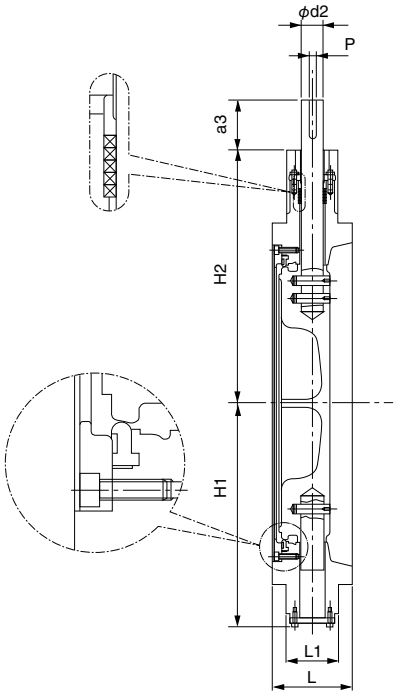

Nominal size		Dimension (mm)																Approx. Mass (kg)
mm	inch	d	D※1	L	L_1	H_1	H_2	a_3	d_2	D_1	D_2	D_3	E	J	G	P	Q	
650	26	653	739	165	105	459	520	117	45	230	105	175	40	50	79	14	3.5	218
700	28	702	789	165	132	510	560	145	55	430	132	380	90	55	121	16	4	285
750	30	754	843	180	132	546	690	145	60	430	132	380	90	55	121	18	4	365
800	32	801	893	190	132	579	705	145	60	430	132	380	90	55	121	18	4	407
850	34	853	943	203	143	591	720	175	65	430	143	380	90	55	151	20	4.5	460
900	36	903	993	203	137	621	750	175	65	430	137	380	90	55	151	20	4.5	505
1000	40	1000	1093	216	148	676	800	175	70	430	148	380	90	55	151	20	4.5	730

* Indicates JIS 5K value.

HLV 304M Typical Actuator Selection Chart

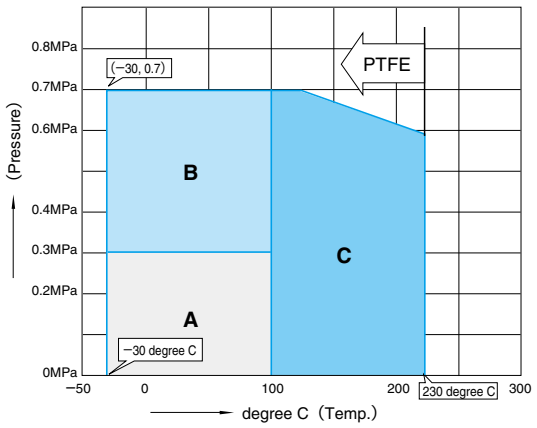

Category	Temp.	Pressure
A	−30 to 100 degree C	0.0MPa to 0.3MPa
B		0.3MPa to 0.7MPa
C	100 to 230 degree C	0.0MPa to 0.7MPa

	Size (mm) / Category	650	700	750	800	850	900	1000
Worm gear 2S	A	MGH-4						MGH-4.5
	B		MGH-4.5		MGH-5			MGH-7
	C	MGH-4.5	MGH-5		MGH-6	MGH-7		On application
DA cylinder 3A	A	TGA-160					TGA-180	
	B	TGA-180	TGA-200		TGA-220	TGA-250		
	C	TGA-200	TGA-220	TGA-250		TGA-280		
SA cylinder 3U, K	A	TG-20S						
	B	On application						
	C							

Electric motor actuator is also available upon request.
Safety factor for above actuator selection table: 1.5 times
Actuator selection is subject to the actual working condition.

HLV 304M Applicable Flange Standards

Nominal size		Flange Standard									
mm	inch	JIS5K	JIS10K	ASME A	ASME B	DIN 10	BS	TAYLOR	LADISH	G5524	BS 10
650	26	○	○	○	○	—	—	△	△	×	×
700	28	○	○	○	○	○	○	△	△	△	×
750	30	○	○	○	○	—	○	△	△	×	△
800	32	○	○	○	○	○	○	△	△	△	×
850	34	○	○	○	○	—	—	△	△	×	×
900	36	○	○	○	○	○	○	△	△	△	△
950	38	—	—	○	○	—	—	△	△	×	×
1000	40	○	○	○	○	○	○	△	△	△	×

JIS5: JIS B2238(1996)
JIS10: JIS B2238(1996)
ASME A: ASME B16.47-1990 table5 dimensions of class 150 series A flanges
ASME B: ASME B16.47-1990 table11 dimensions of class 150 series A flanges
DIN 10: DIN3532 PN10
BS: BS4504 NP10
TAYLOR: TAYLOR FORGE 125, 150Lb
LADISH: LADISH150
G5524: JIS G 5524
BS 10: BS10 TABLE E

○ : Applicable
△ : Applicable subject to conditions
— : Not standard
× : Not applicable

HLV 304M Minimum Internal Diameters of Piping

Nominal size		Minimum internal diameters of piping A(mm)
mm	inch	
650	26	612
700	28	653
750	30	705
800	32	754
850	34	803
900	36	834
1000	40	950

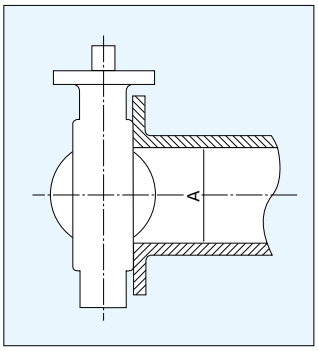

507V

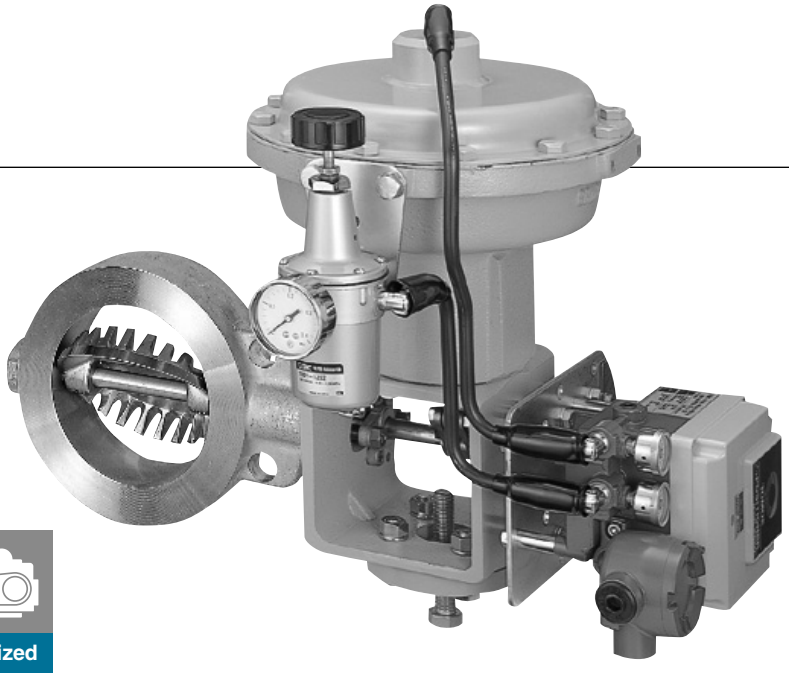



Features and Benefits

For various applications such as air conditioning systems, pulp and paper mills, steel mills, chemical plants, food processing and many other process industries, the 507V rotary control valve will support your fluid control requirements.

Flexible control over a wide range

The 507V allows complete control over the full range from the open to the closed position. The valve can also handle high temperatures of up to 400 degrees C such as in steam lines and it will respond quickly and flexibly to any changes within the operating parameters of the process line. The 507V therefore is the optimum valve for any control system processing multiple products where the operating conditions change from time to time in accordance with process requirements.

Cost-effective rotary control valve

In spite of its compact size and light weight, the 507V has a large valve capacity that minimises the energy loss of fluid at the fully open position.
This compact design reduces the required size of the actuator, installation space and piping supports. It also minimises vibration of control systems and increases the operating life.
These features provide the benefit of reducing the total operating cost of your plant.

Model 507V is the high temperature version of our rotary control valve designed for exclusive use in the regulation of fluids.

General Description

The high performance characteristics of this model originate from its unique design with a teeth and gull-wing shaped disc that touches the seat at a certain angle (Fig.1). The teeth are arranged on the circumference of the disc towards either direction of flow. The 'touch-at-an-angle' disc assists the reduction of seating and unseating torque and facilitates smooth control of the valve.
Other benefits include high rangeability, low noise level and anticavitation.
This model covers a wide temperature range in the fluid control of air conditioning systems, pulp and paper mills, chemical plants, steel mills and food processing applications.

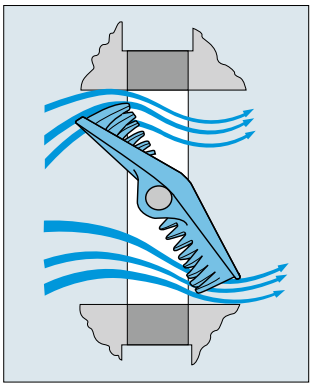

General

With guide-vane-like teeth around the disc edge, and the disc touching the seat at a certain angle, this product is a compact, lightweight and highly cost-effective, high-performance rotary control valve that exhibits outstanding control characteristics.
The valve provides steady control over a wide range with higher rangeability, better cavitation resistance, lower dynamic torque, lower noise level, and a better leakage rate than any other rotary control valve.
Two models, the 507V and 508V, are available for a range of severe applications. The 507V is the optimum type for fluid control of high pressure, high temperature systems. The 508V is characterized by its rubber seat ring. and eliminates the need for any additional stop valve because of its complete sealing capability.

Fundamental Structure

This product has two basic design features that are responsible for the outstanding performance. One is the teeth around the disc and the other is the gull-wing-like design of the disc.

The teeth on the circumference of the disc break up the fluid energy acting on it with a resultant reduction of pressure recovery.
Unlike conventional flat discs, the gull-wing-like disc of the product touches the seat at a certain angle for reduced seating/unseating torque. This results in steady control of the valve.

Recent trend toward rotary type control valves

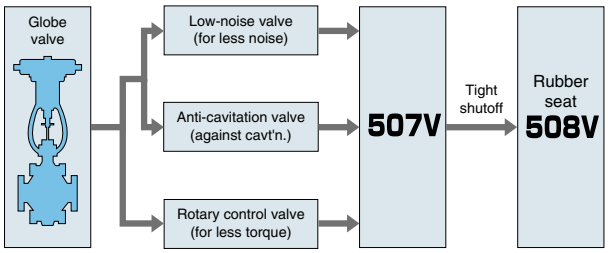

Standard Specifications

Valve nominal size		50 to 400mm	
Pressure rating		50 to 200mm: ANSI Class 300lb 250 to 400mm: ANSI Class 150lb	
Actuator mounting		Non-flange joint	
Flange accommodation		JIS: 10K/16K/20K, ANSI Class 150lb, ANSI Class 300lb, DIN NP 10/16/25 Please contact us when 250mm/16K and over.	
Service temperature ※1	Cast steel	-10 to 400 degrees C. Following materials are used for 200 degrees C or higher ― carbon for bearings, exfoliated graphite	
	Stainless steel	-50 to 400 degrees C. Following materials are used for 200 degrees C or higher ― carbon for bearings, exfoliated graphite	
Rangeability		100:1	
Valve opening		Max. 70˚	
Flow characteristics		Equal percent	
Leakage rate ※2		FCI 70-2 Class II	
Stuffing box		Studs and nuts tightening	
Standard materials	Body	Cast steel SCPH2(A216 WCB)	Stainless steel SCS14(A351 CF8M)
	Disc ※3	Stainless steel SCS14(A351 CF8M)	
	Stem	Stainless steel SUS630(SUS316)※4	
	Bearings	Reinforced PTFE, Carbon graphite(200 degrees C and over)	
	Packings	Exfoliated graphite	Exfoliated graphite

※1 Please consult us if the application is in the range of 400 to 600 degrees C.
※2 The disc is gull wing shaped and touches the metal seat at an angle. This design minimises leakage to a level less than 0.5% of the rated Cv which is equal to or lower than the leakage permitted on a double-seat globe control valve.
※3 The disc is electroless plated with nickel.
※4 Please consult us if an SUS316 stem is required.

508V

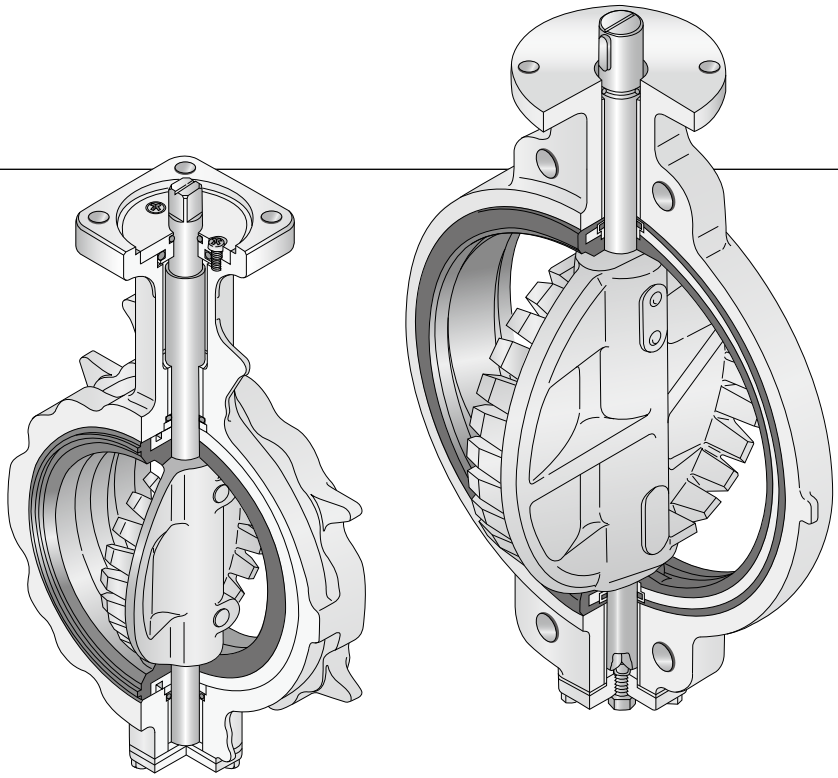



Features and Benefits

Except for the rubber seat ring, the 508V has the same design principle as the 507V. Excellent controllability is achieved by having the innovative teethed disc seating at a certain angle. The 508V has a reinforced core rubber seat ring allowing it to be used for high pressure service up to 1.6MPa with complete tight shut-off.

Rubber seat ring with a "control cosine curve" profile

Taking into consideration the cosine curve profile rubber seat ring incorporated into our models 700G and 773Z, we developed a new type of seat ring for exclusive use in the 508V. The 508V has a reinforced core rubber seat ring incorporated with a "control cosine curve" profile for sizes between 50mm and 200mm. This seat ring design ensures a tight shut-off up to a working pressure of 1.6MPa.
The 508V available in sizes between 250mm and 350mm has a similar seat ring design and profile, but the seat ring is backed up by a precisely formed metal core which is encapsulated inside the rubber. This design enables the control valve to function under severe conditions of high velocity, a large differential pressure or a high vacuum. (The maximum allowable shut-off pressure is 1.0MPa).

No additional stop valve, less installation space and less cost

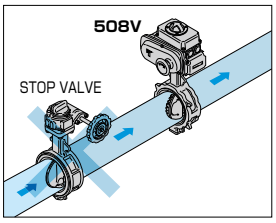

Because of its reliable sealing effect against a high differential pressure, the 508V does not require an additional stop valve. You save on installation space and benefit from the excellent cost effective features of our rotary control valve.

Satisfies both JIS and ISO standards for extended applications

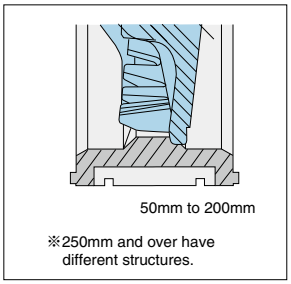

The 508V is available in different flange specifications. Also, its face-to-face dimension meets both JIS and ISO requirements. Therefore this model is applicable for various industrial applications worldwide.

General

With guide-vane-like teeth around the disc edge, and the disc touching the seat at a certain angle, this product is a compact, lightweight and highly cost-effective, high-performance rotary control valve that exhibits outstanding control characteristics.
The valve provides steady control over a wide range with higher rangeability, better cavitation resistance, lower dynamic torque, lower noise level, and a better leakage rate than any other rotary control valve.
Two models, the 507V and 508V, are available for a range of severe applications. The 507V is the optimum type for fluid control of high pressure, high temperature systems. The 508V is characterized by its rubber seat ring. and eliminates the need for any additional stop valve because of its complete sealing capability.

Fundamental Structure

This product has two basic design features that are responsible for the outstanding performance. One is the teeth around the disc and the other is the gull-wing-like design of the disc.

The teeth on the circumference of the disc break up the fluid energy acting on it with a resultant reduction of pressure recovery.
Unlike conventional flat discs, the gull-wing-like disc of the product touches the seat at a certain angle for reduced seating/unseating torque. This results in steady control of the valve.

Recent trend toward rotary type control valves

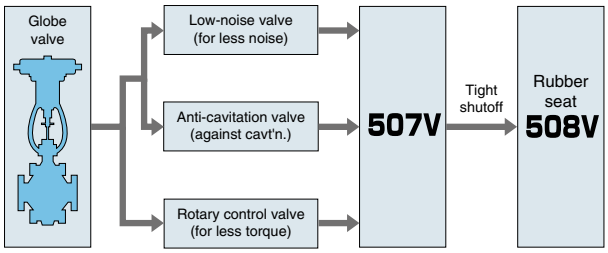

General Description

With a specially designed rubber seat ring, Model 508V ensures tight shut-off and eliminates the need for any additional stop valve required by conventional control valves. The high performance characteristics of this model originate from its unique design with a teeth and gull-wing shaped disc that touches the seat at a certain angle (Fig.1). The teeth are arranged on the circumference of the disc towards either direction of flow. The 'touchat-an-angle' disc assists the reduction of seating and unseating torque and facilitates smooth control of the valve. Other benefits include high rangeability, low noise level and anti-cavitation.
The face-to-face dimension meets both JIS and ISO standards so the 508V is applicable for various industrial fields including air conditioning systems.

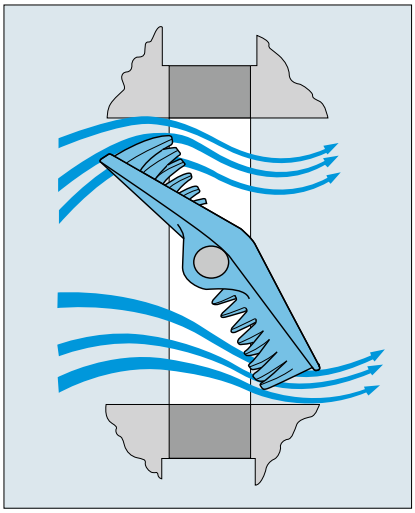

Standard Specifications

Valve nominal size		50, 80, 100, 150, 200mm	250, 300, 350mm	400, 450, 500, 600mm
Face-to-face dimensions ※1		JIS B 2002 Series 46 / ISO 5752 Basic Series 20 Wafer butterfly valve (short)		
Flange accommodation		JIS: 5K/10K/16K/20K, ANSI 150lb, DIN NP 10/16, BS 4504 PN 10/16, BS10 'E', 'F', JIS G 5524, 5527	JIS: 10K/16K, ANSI 150lb, DIN NP 10/16, BS 4504 PN 10/16, BS10 'E', 'F', JIS G 5524, 5527	JIS: 10K, ANSI 150lb, DIN NP 10/16, BS 4504 PN 10/16, JIS G 7.5, 5527
Service temperature		-20 to 120 degrees C (NBR: -10 to 80 degrees C)		-10 to 80 degrees C (*EPDM: -20 to 120 degrees C)
Working temperature in continuous use ※2		0 to 70 degrees C (NBR : 0 to 60 degrees C)		0 to 60 degrees C (*EPDM : 0 to 70 degrees C)
Max. working pressure		1.6MPa (NBR: 1.0MPa)	1.0MPa	
Body test pressure		2.4MPa (NBR: 1.5MPa)	1.5MPa	
Seat leak pressure		1.8MPa (NBR: 1.1MPa)	1.1MPa	
Flow characteristics		Nearly equal percent		
Rangeability		100:1		
Standard materials	Body	FCD450 (No fluid exposure)		
	Disc	SCS14	SCS13	
	Stem	SUS420J2 (No fluid exposure)		
	Seat ring	*EPDM core-reinforced (Option – NBR core-reinforced)		NBR core-reinforced (Option - *EPDM core-reinforced)
Coating		Silicon resin coating (Grey N7)		Lacquer Primer (Munsell N7)

※1 350mm only : JIS B 2002 Series 47 / ISO Basic Series 25 (Medium)
※2 'Working temperature in continuous use' stands for the temperature continuously kept exceeding on hour.
* Never use an EPDM rubber seat ring if the valve is being used for oil or for a fluid containing even a slight amount of oil.

Multiple merits for multiple applications

Controllability

High rangeability

*The wide range of controllability permits flexible adjustment to any changes in the process conditions of production lines. This merit is especially beneficial to multifold productions.
*The conventional "split range control" with twin valves is no longer required. One product is enough to cover the whole range.

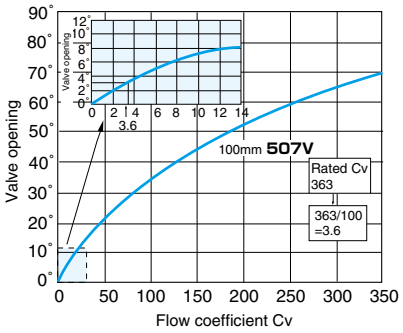

With its nearly "equal percent" flow characteristics and its very low leakage rate, the product offers an extremely high rangeability of 100:1.

Low dynamic torque

*The steady performance ensures more precise control.
*The compact actuator saves space and energy.

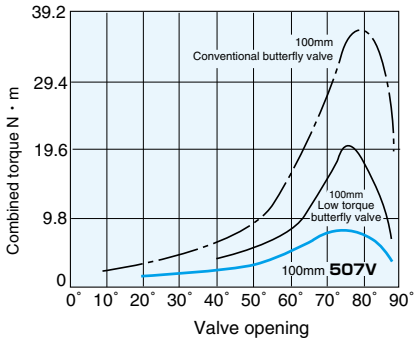

The above graph shows a comparison of the product with other typical valves.
The patented disc has remarkably reduces the dynamic torque.

Reliability

Excellent cavitation resistance

*The outstanding cavitation resistance increases the operational life of the valve and pipeline, and improves the reliability of the system.
*This model is works in more severe requirements than ever.

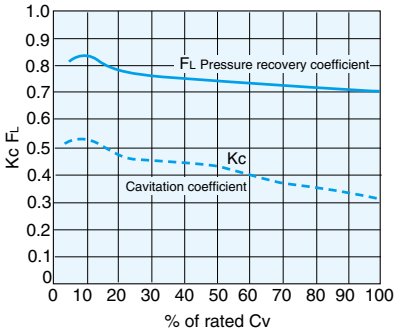

A high coefficient of initial cavitation (KC), and a high pressure recovery coefficient (FL), inhibit the occurence of cavitation.

Cv value

Size			Opening angle						
mm	inch		10°	20°	30°	40°	50°	60°	70°
50	2	Cv	3	11	22	38	53	69	85
		CvFp	3	11	22	37	50	63	74
80	3	Cv	14	33	58	88	120	140	176
		CvFp	14	33	58	86	115	133	158
100	4	Cv	17	43	80	127	179	250	363
		CvFp	17	43	80	126	175	238	323
150	6	Cv	55	120	210	320	450	590	825
		CvFp	55	120	208	315	441	560	730
200	8	Cv	70	175	350	620	1025	1265	1595
		CvFp	70	174	345	608	974	1151	1388
250	10	Cv	96	245	455	718	1135	1470	2515
		CvFp	96	244	450	710	1115	1396	2188
300	12	Cv	160	410	760	1200	1730	2460	3610
		CvFp	160	405	750	1175	1644	2238	3130
350	14	Cv	200	500	900	1500	2200	3200	4440
		CvFp	198	495	891	1470	2090	2910	3640
400	16	Cv	210	550	1020	1614	2327	3310	5650
		CvFp	210	548	1015	1598	2280	3145	5090

Remarks:
CvFp : Pipe size=1.5×Valve size
EX:

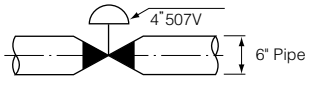

Environmental considerations

Low noise level

*Provides better work environment.
*Especially in air and gas applications, this product has a lower noise level by 5 to 10dBA and meets and exceeds noise regulations

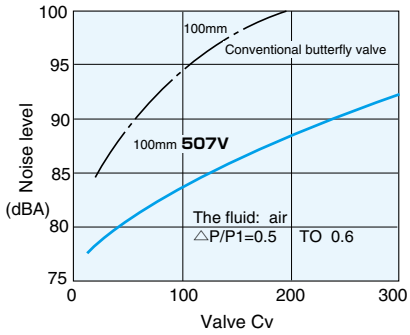

The teeth on the disc cut the flow into fine jet streams.
This is the most effective device for lowering the noise level when the valve is half open.

Cost merit

Larger valve capacity

*Reduces loss of energy at the fully open position.
*Allows one to two sizes of valve reduction in comparison with a conventional valve.

Compact and lightweight design

*Permits compact piping arrangement.
*Allows the use of a portable remote controller unit.
*Eliminates vibration problems of the piping system, and improves operational life.

Comparison of dimensions (Nominal size: 80mm)

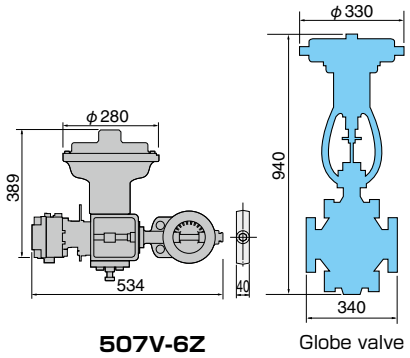

Comparison of weight (Nominal size: 80mm)

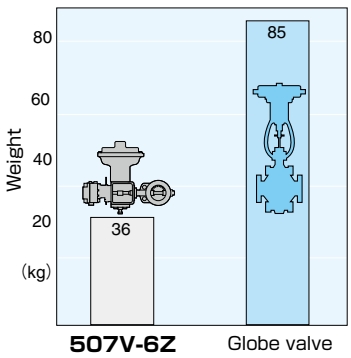

Simple design

*Permits easy control of spare parts.
*Facilitates easy maintenance.
*Has a reduced number of parts and improved reliability.

Pressure recovery factor (FL), coefficient of incipient cavitation (Kc)

Opening angle	10°	20°	30°	40°	50°	60°	70°
Pressure recovery factor (FL)	0.85	0.80	0.78	0.76	0.73	0.71	0.70
Coefficient of incipient cavitation (Kc)	0.55	0.50	0.47	0.45	0.40	0.37	0.32

507V

507V Actuator selection chart

■507V

型 番	Size (mm/inch)								
	50	80	100	150	200	250	300	350	400
	2	3	4	6	8	10	12	14	16
2S	DGH-1					DGH-2			
7E,3A	T85			T200	T380	T750		TGA-100	
7G,7F	T200S		T380S			TG-12S			
4 I	4 I-1			4 I-2		4 I-2.5	4 I-3		
6Z	280H					400H			

507V Allowable differencial pressure for 7E

■Double-action Cylinder (Stem 630ss)

(MPa)

Nominal size			Cv %(Cv/Rated Cv)					
			0	20	40	60	80	100
			Valve opening %					
mm	inch	Cylinder	0	41	57	69	86	100
50	2	T85	4.9	1.54	3.33	2.94	2.94	2.94
80	3	T85	4.9	1.01	2.25	1.86	1.86	1.86
100	4	T85	3.43	1.37	0.97	0.78	0.78	0.78
150	6	T200	1.37	0.48	0.34	0.29	0.29	0.29
200	8	T380	1.17	0.30	0.20	0.14	0.14	0.14
250	10	T380	1.47	0.42	0.28	0.19	0.19	0.19
300	12	T750	0.98	0.25	0.16	0.12	0.12	0.12
350	14	T750	0.64	0.16	0.10	0.08	0.08	0.08
400	16	T750	0.59	0.11	0.07	0.06	0.06	0.06

507V Allowable differencial pressure for 7G, 7F

■Single-action Cylinder (Stem 630ss)

(MPa)

Nominal size			Cv %(Cv/Rated Cv)					
			0	20	40	60	80	100
			Valve opening %					
mm	inch	Cylinder	0	41	57	69	86	100
50	2	T200S	4.90	1.28	3.33	2.94	2.94	2.94
80	3	T200S	4.90	0.85	2.25	1.86	1.86	1.86
100	4	T380S	3.43	1.06	0.79	0.75	0.78	0.78
150	6	T380S	1.37	0.36	0.26	0.24	0.29	0.29
200	8	T380S	1.17	0.30	0.20	0.14	0.14	0.14

507V Allowable differencial pressure for 6Z

■Diaphram Actuator (Stem 630ss)

(MPa)

Nominal size		Model	Supply pressure (MPa)	Spring range (kPa)	Cv %(Cv/Rated Cv)					
					Close	20	40	60	80	100
					Valve opening %					
mm	inch				0	41	57	69	86	100
50	2	280H	0.27	60 to 220	4.90	4.90	3.33	2.94	2.94	2.94
80	3	280H	0.27	60 to 220	4.90	3.13	2.25	1.86	1.86	1.86
100	4	280H	0.27	60 to 220	3.43	1.37	0.97	0.78	0.78	0.78
150	6	280H	0.27	60 to 220	1.37	0.48	0.34	0.29	0.29	0.29
200	8	280H	0.27	60 to 220	1.21	0.30	0.20	0.14	0.14	0.14
250	10	400H	0.27	60 to 190	1.50	0.36	0.25	0.21	0.20	0.20
300	12	400H	0.27	60 to 190	1.03	0.22	0.14	0.12	0.12	0.12
350	14	400H	0.27	60 to 190	0.64	0.15	0.10	0.09	0.08	0.08
400	16	400H	0.27	60 to 190	0.59	0.10	0.07	0.06	0.05	0.05

507V Allowable differencial pressure on stem

■SUS630

(MPa)

Nominal size		Cv %(Cv/Rated Cv)					
		0	20	40	60	80	100
		Valve opening %					
mm	inch	0	41	57	69	86	100
50	2	4.90	4.90	3.33	2.94	2.94	2.94
80	3	4.90	3.13	2.25	1.86	1.86	1.86
100	4	3.43	1.37	0.97	0.78	0.78	0.78
150	6	1.37	0.48	0.34	0.29	0.29	0.29
200	8	1.17	0.30	0.19	0.14	0.14	0.14
250	10	1.47	0.42	0.28	0.20	0.20	0.20
300	12	0.98	0.25	0.16	0.12	0.12	0.12
350	14	0.64	0.16	0.10	0.08	0.08	0.08
400	16	0.59	0.11	0.07	0.06	0.06	0.06

■SUS316

(MPa)

Nominal size		Cv %(Cv/Rated Cv)					
		0	20	40	60	80	100
		Valve opening %					
mm	inch	0	41	57	69	86	100
50	2	4.90	2.45	1.76	1.57	1.57	1.57
80	3	3.13	1.56	1.17	0.98	0.98	0.98
100	4	1.66	0.70	0.53	0.39	0.39	0.39
150	6	0.78	0.24	0.16	0.13	0.13	0.13
200	8	0.54	0.15	0.10	0.08	0.08	0.08
250	10	0.73	0.21	0.14	0.12	0.12	0.12
300	12	0.51	0.12	0.08	0.06	0.06	0.06
350	14	0.38	0.08	0.06	0.05	0.05	0.05
400	16	0.32	0.06	0.04	0.03	0.03	0.03

Worm gear type 507V-2S (50mm to 400mm)

Nominal size		Dimension (mm)										Gear type	Approx. Mass (kg)
mm	inch	φd	φD	L	H_1	H_2	H_3	E	K	F	φW		
50	2	49	92	40	63	183	32	58	93	156	160	DGH-1	13
80	3	73	127	40	86	201	32	58	93	156	160	DGH-1	15
100	4	97	155	40	98	224	32	58	93	156	160	DGH-1	16
150	6	146	216	52	129	262	32	58	93	156	160	DGH-1	23
200	8	194	265	62	184	283	32	58	93	161	200	DGH-1	32
250	10	241	324	89	196	393	42	85	126	246	280	DGH-2	60
300	12	289	370	89	230	446	42	85	126	246	280	DGH-2	70
350	14	318	415	89	256	431	42	85	126	246	280	DGH-2	86
400	16	364	470	108	296	453	42	85	126	246	280	DGH-2	100

■507V-2S

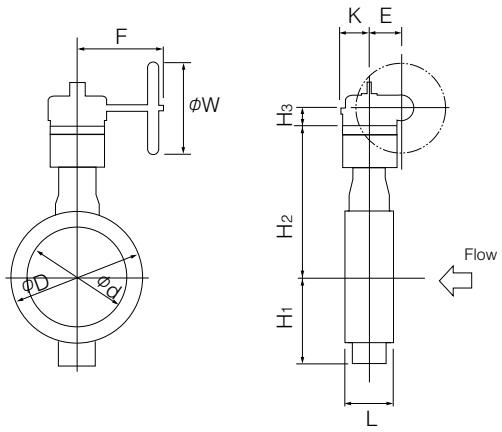

■2S Installation direction

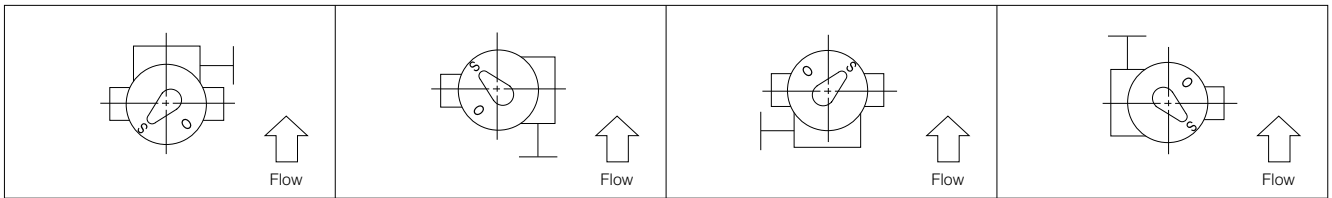

2SA	2SB	2SC	2SD

Double-acting Pneumatic Cylinder Type 507V-3A（350mm, 400mm）

Nominal size		Dimension (mm)										Cylinder type	Approx. Weight (kg)
mm	inch	φd	φD	L	H_1	H_2	H_3	A	P	f_1	f_2		
350	14	318	415	89	256	316	404	773	433	83	133	TGA-100	95
400	16	364	470	108	296	338	404	773	433	83	133	TGA-100	110

•A free angle adjuster comes with the pneumatic cylinder.

■507V-3A

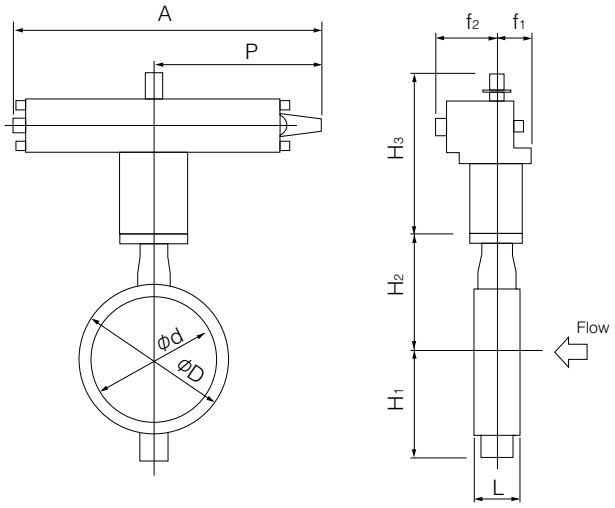

■3A Installation Direction

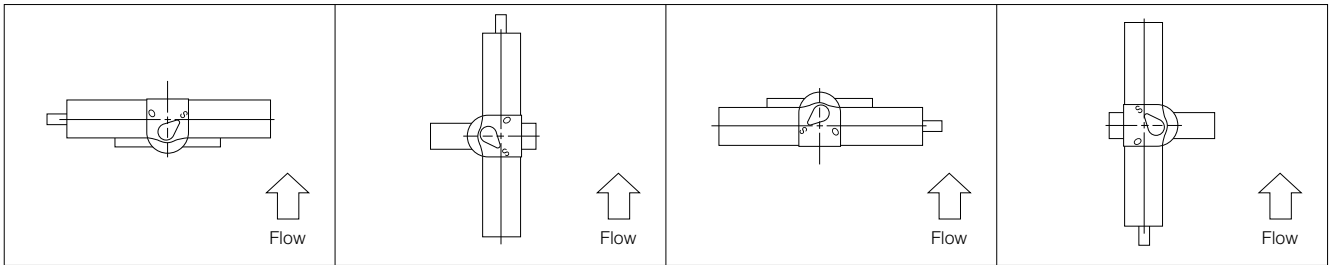

3AA	3AB	3AC	3AD

Single Phase Electric Motor Type 507V-4 I(50mm to 400mm)

Nominal size		Dimension (mm)										Motor type	Approx. Weight (kg)
mm	inch	φd	φD	L	H_1	H_2	H_3	A	P	F	K		
50	2	49	92	40	63	198	191	252	138	126	65	4 I-1	18.3
80	3	73	127	40	86	216	191	252	138	126	65	4 I-1	19.3
100	4	97	155	40	98	239	191	252	138	126	65	4 I-1	20.3
150	6	146	216	52	129	262	224	310	167	154	85	4 I-2	24
200	8	194	265	62	184	283	224	310	167	154	85	4 I-2	34
250	10	241	324	89	196	413	227	310	167	154	85	4 I-2.5	51
300	12	289	370	89	230	446	255	388	223	246	136	4 I-3	70
350	14	318	415	89	256	431	255	388	223	246	136	4 I-3	86
400	16	364	470	108	296	453	255	388	223	246	136	4 I-3	100

■507V-4 I

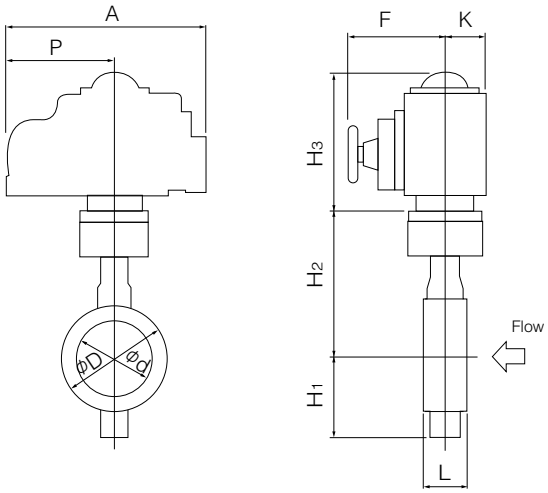

■4I Installation Direction

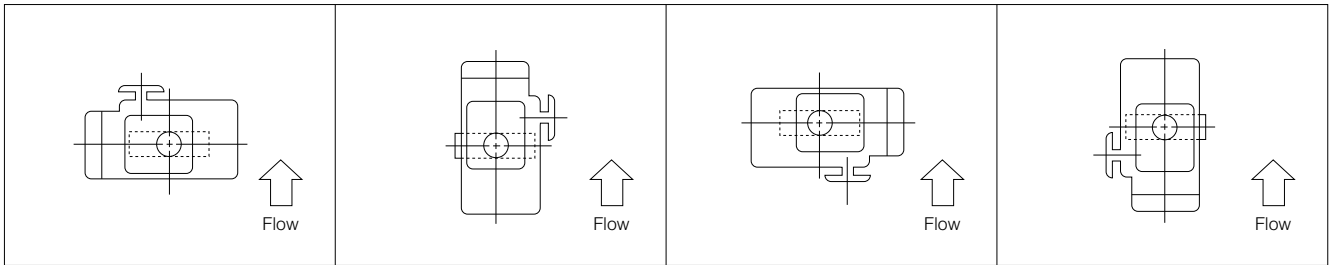

4 I A	4 I B	4 I C	4 I D

507V-6Z(50mm to 400mm)with diaphragm actuator

Nominal size		Dimension (mm)											Diaphragm type	Approx. Mass (kg)
mm	inch	φd	φD	L	H_1	H_2	H_3	A	P	f_1	f_2	f_3		
50	2	49	92	40	63	108	322	310	126	121	147	36	280H	35
80	3	73	127	40	86	126	322	310	126	121	147	36	280H	37
100	4	97	155	40	98	149	322	310	126	121	147	36	280H	38
150	6	146	216	52	129	187	322	310	126	121	147	36	280H	45
200	8	194	265	62	184	208	332	310	126	121	147	36	280H	54
250	10	241	324	89	196	278	402	416	185	135	133	50	400H	90
300	12	289	370	89	230	331	402	416	185	135	133	50	400H	100
350	14	318	415	89	256	316	402	416	185	135	133	50	400H	115
400	16	364	470	108	296	338	402	416	185	135	133	50	400H	130

Remarks: H3 shows the dimension when the positioner (TCE2000) is installed.
The H3 dimension will change depending on the positioner type.

■507V-6Z

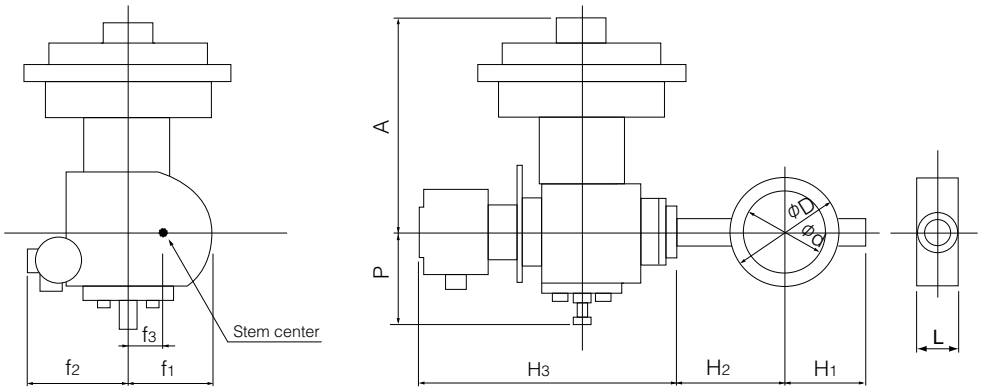

■6Z Installation direction

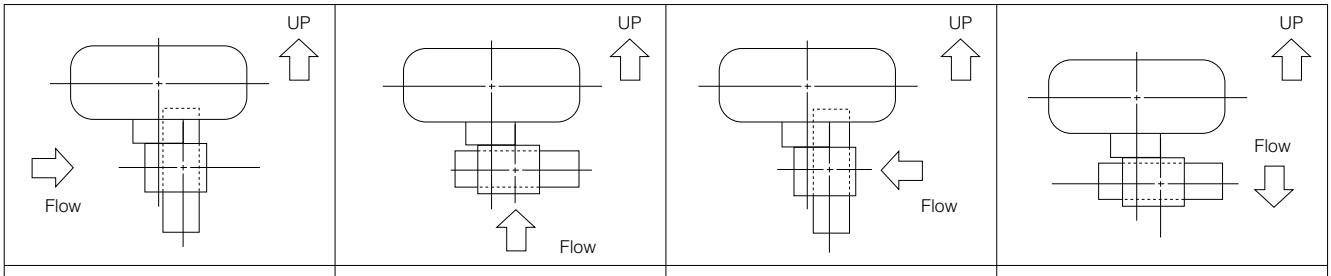

6ZA	6ZB	6ZC	6ZD

507V Cv value/pressure loss coefficient

●Cv value

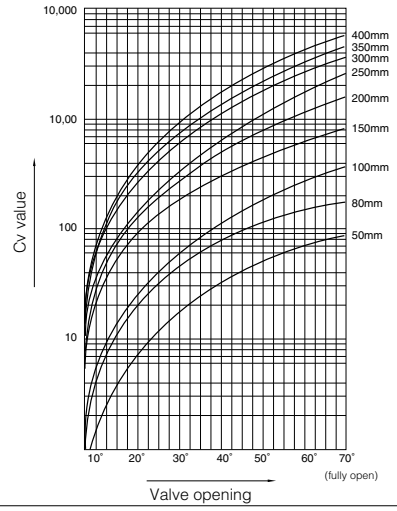

●Pressure loss coefficient

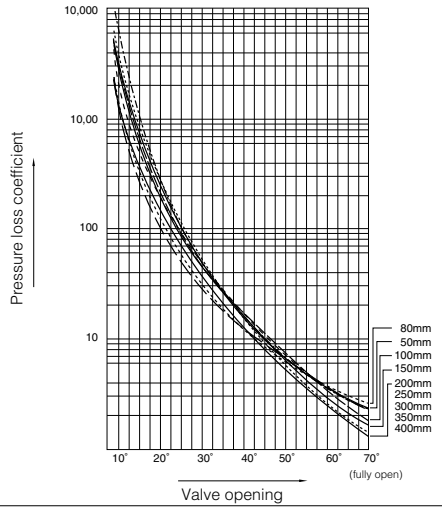

507V Cv value

Nominal size		Valve opening						
mm	inch	10°	20°	30°	40°	50°	60°	70°
50	2	3	11	22	38	53	69	85
80	3	14	33	58	88	120	140	176
100	4	17	43	80	127	179	250	363
150	6	55	120	210	320	450	590	825
200	8	70	175	350	620	1020	1265	1595
250	10	96	245	455	718	1135	1470	2515
300	12	160	410	760	1200	1730	2460	3610
350	14	200	500	900	1500	2200	3200	4440
400	16	210	550	1020	1614	2329	3310	5650

507V Pressure loss coefficient

Nominal size		Valve opening						
mm	inch	10°	20°	30°	40°	50°	60°	70°
50	2	1832	136	34.1	11.4	5.9	3.5	2.3
80	3	406	73	23.6	10.3	5.5	4.1	2.6
100	4	810	127	36.6	14.5	6.5	3.1	1.8
150	6	367	77	25.2	10.9	5.5	2.8	1.7
200	8	697	111	31.3	11.3	4.6	2.1	1.4
250	10	889	136	39.6	14.2	5.4	2.5	1.3
300	12	748	100	30.7	11.0	4.7	2.3	1.3
350	14	815	115	32.6	11.7	5.0	2.4	1.4
400	16	1126	149	37.2	12.5	5.0	2.3	1.4

507V Pressure recovery coefficient(FL)and Cavitation coefficient(Kc)

Valve opening	10°	20°	30°	40°	50°	60°	70°
Pressure recovery coefficient(FL)	0.85	0.80	0.78	0.76	0.73	0.71	0.70
Cavitation coefficient(Kc)	0.55	0.50	0.47	0.45	0.40	0.37	0.32

507V Applicable pipe list in case of A

Nominal size		SGP	STPY	Sch20	Sch40	Sch10S	Sch20S	Minimum internal diameters of piping (mm)
mm	inch							
50	2	○	–	○	○	○	○	36
80	3	○	–	○	○	○	○	71
100	4	○	–	○	○	○	○	98
150	6	○	–	○	○	○	○	148
200	8	○	–	○	○	○	○	199
250	10	○	–	○	○	○	○	241
300	12	○	–	○	○	○	○	293
350	14	○	○	○	○	–	–	321
400	16	○	○	○	○	–	–	367

507V Applicable pipe list in case of B

Nominal size		SGP	STPY	Sch20	Sch40	Sch10S	Sch20S
mm	inch						
50	2	○	–	○	○	○	○
80	3	○	–	○	○	○	○
100	4	○	–	○	○	○	○
150	6	○	–	○	○	○	○
200	8	○	–	○	○	○	○
250	10	○	–	○	○	○	○
300	12	○	–	○	○	○	○
350	14	○	○	○	○	–	–
400	16	○	○	○	○	–	–

Remark1: ○=Applicable ×=Not applicable

Remark2: Butterfly valves are inserted into a pipe that was fitted with the disc when fully open.
In cases where you are using a pipe or flange that is less than the minimum inner pipe diameter, use is still possible if means are taken such as inserting a spacer between the valve and flange.
For details, please consult us.

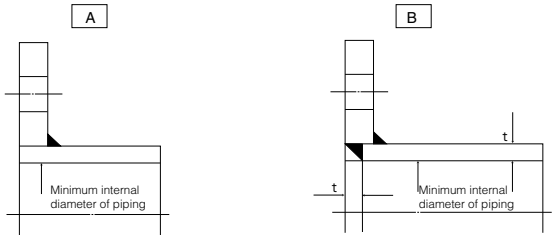

507V Applicable flange standard

Nominal size		JIS			ANSI		BS4504	DIN
mm	inch	10K	16K	20K	150Lb	300Lb	PN10	NP10
50	2	○	D	D	○	D	○	○
80	3	D	D	D	○	D	D	D
100	4	D	D	D	D	D	D	D
150	6	D	D	D	D	D	D	D
200	8	D	D	D	D	D	D	D
250	10	D	×	×	D	×	D	D
300	12	D	×	×	D	×	D	D
350	14	D	×	×	D	×	D	D
400	16	D	×	×	D	×	D	D

○ : Can be used without flange drilling.
D : With flange drilling
× : Not applicable

507V Piping bolt and nut sizes

Nominal size		JIS 10K	JIS 20K	ANSI 150Lb	ANSI 300Lb
mm	inch	Long bolts and nuts		Long bolts and nuts	
50	2	4-M16×130	8-M16×130	4-U 5/8×140	8-U 5/8×140
80	3	8-M16×130	8-M20×170	4-U 5/8×150	8-U 3/4×175
100	4	8-M16×130	8-M20×170	8-U 5/8×150	8-U 3/4×175
150	6	8-M20×170	12-M22×190	8-U 3/4×175	12-U 3/4×190
200	8	12-M20×170	12-M22×210	8-U 3/4×190	12-U 7/8×230
250	10	12-M22×210	—	12-U 7/8×230	—
300	12	16-M22×210	—	12-U 7/8×230	—
350	14	16-M22×210	—	12-U 1 ×260	—
400	16	16-M24×240	—	16-U 1 ×260	—

Material Long bolt: SNB7
Nut: S45C

Example

Long bolts: 12 - M22 × 185
N M L

Long bolts and nuts (full thread)

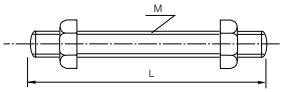

508V Expanded view of components

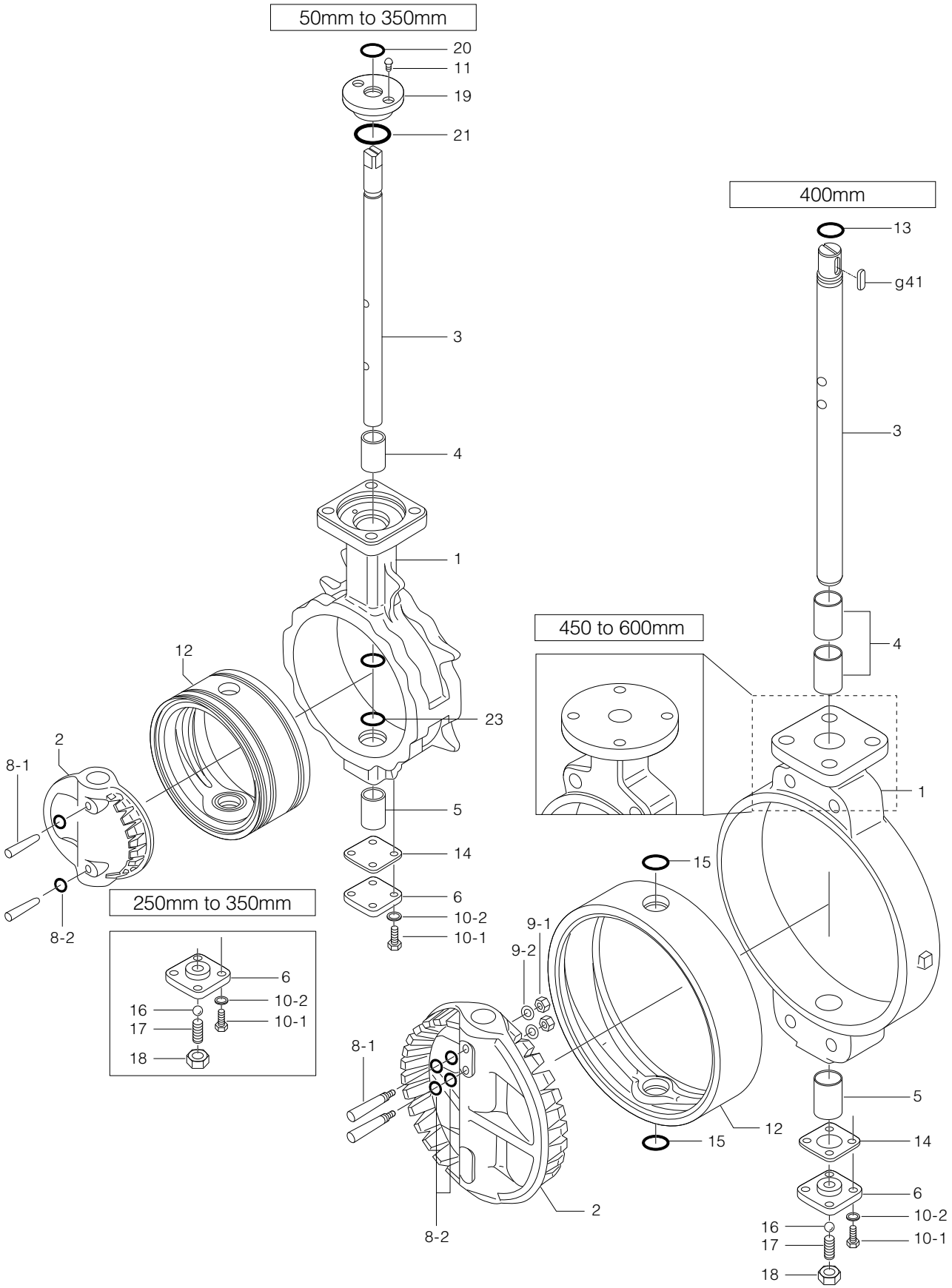

■508V Parts list (50mm to 350mm)

No.	Description	Q'ty	Remarks
1	Body	1	
2	Disc	1	
3	Stem	1	
4	Bearing	1	50mm to 250mm
		2	300mm, 350mm
5	Bearing	1	
6	Bottom cover	1	
★ 8-1	Taper pin	2	
★ 8-2	O-ring	4	Only 250mm, 350mm
10-1	Hexagon bolt	4	
10-2	Spring washer	4	
11	Machine screw	2	50mm to 200mm
		4	250mm to 350mm
★ 12	Seat ring	1	
★ 14	Gasket	1	
16	Ball	1	Only 250mm to 300mm
17	Hollow bolt	1	Only 250mm to 300mm
18	Lock nut	1	Only 250mm to 300mm
19	Dust seal	1	
★ 20	O-ring	1	
★ 21	O-ring	1	
★ 23	O-ring	2	

■508V Parts list (400mm to 600mm)

No.	Description	Q'ty	Remarks
1	Body	1	
2	Disc	1	
3	Stem	1	
4	Bearing	2	400mm, 500mm
		3	450mm, 600mm
5	Bearing	1	400mm
		2	450mm to 600mm
6	Bottom cover	1	
★ 8-1	Taper pin	2	
★ 8-2	O-ring	4	
★ 9-1	Hexagon bolt	2	
★ 9-2	Spring washer	2	
10-1	Hexagon bolt	4	
10-2	Spring washer	4	
★ 12	Seat ring	1	
★ 13	O-ring	1	
★ 14	Gasket	1	
★ 15	O-ring	2	
16	Ball	1	
17	Hollow bolt	1	
18	Lock nut	1	
g41	Key	1	

Remark: The ★ indicates recommended spare parts. They are supplied as "Seat ring set" with a small hexagonal spanner to remove hollow bolt (P.21).

508V Actuator Selection Chart

■508V

Model	Category	Size (mm/inch)											
		50	80	100	150	200	250	300	350	400	450	500	600
		2	3	4	6	8	10	12	14	16	18	20	24
2U	Standard	2U-0	2U-1		2U-2	2U-3		2U-4		2U-5	MGH-3		MGH-4
7E,3A	Standard	T35	T85		T200	T380	T750		TGA-125		TGA-140	TGA-160	TGA-200
7G,7F 3U,3K	Standard	T85S	T200S	T380S	T750S	TG-10S	TG-12S		TG-14S		TG-20S		
4 I	ON-OFF Control	4 I-0		4 I-1	4 I-2.5		4 I-3		4 I-4				
4J,4L	Standard	SRJ-010			SRJ-020	SRJ-060		LTKD-01 0.2kW/ DGH-2		LTKD-01 0.4kW/ MGH-3	LTKD-02 0.75kW/ MGH-4		LTKD-05 0.75kW/ MGH-5
6X,6W	Standard	280H			400H								

Remark: In case of 350mm type with accessories below for control type 4I-4 should be selected.

- Micom unit
- Servo unit
- Speed control unit
- Potentiometer

508V Pressure-Temperature Rating

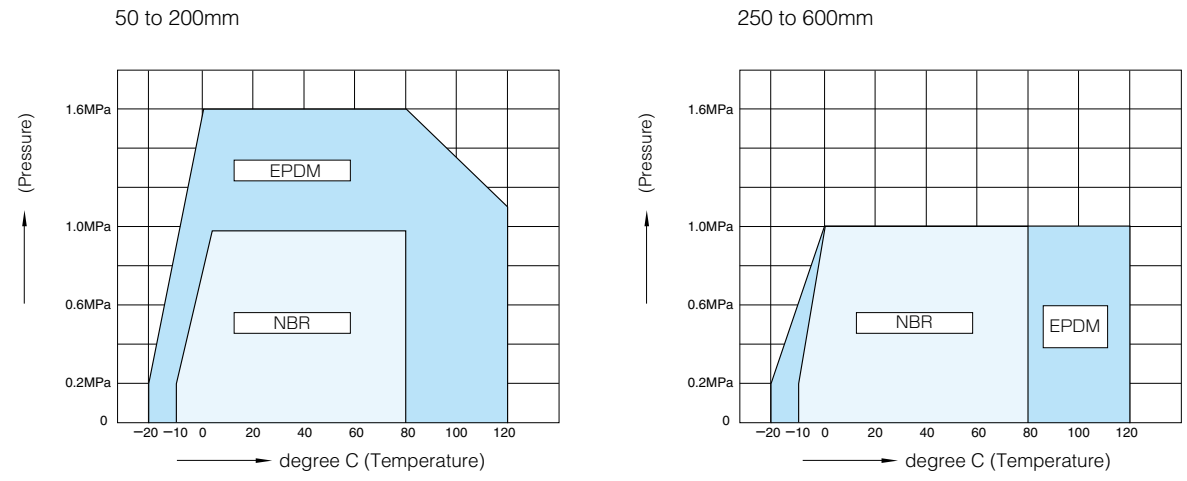

508V Allowable differencial pressure for 6X and 6W

(kPa)

Nominal size		Valve opening							
mm	inch	0°	10°	20°	30°	40°	50°	60°	70°
50	2	1600	685	334	148	86	59	45	40
80	3	1400	694	475	308	176	116	69	47
100	4	800	765	575	315	204	133	69	37
150	6	1600	783	546	360	219	152	90	44
200	8	1600	676	453	287	178	124	79	44

508V Allowable differencial pressure on stem

(kPa)

Nominal size		Valve opening							
mm	inch	0°	10°	20°	30°	40°	50°	60°	70°
50	2	1600	685	334	148	86	59	45	40
80	3	1600	694	475	308	176	116	69	47
100	4	1600	765	575	315	204	133	69	37
150	6	1600	783	546	360	219	152	90	44
200	8	1600	676	453	287	178	124	79	44
250	10	1000	562	233	149	84	58	37	21
300	12	1000	220	232	149	84	58	37	21
350	14	1000	367	222	116	65	45	29	16
400	16	1000	209	118	58	52	46	33	25
450	18	1000	223	197	115	56	48	33	26
500	20	1000	162	143	97	55	44	30	23
600	24	1000	246	171	110	54	49	41	27

The above is based on the result at our test plant. The test was conducted with fresh water at ambient temperature. Therefore, please use the data for reference only.
Consult us if you have a question or doubt.

508V Maximum velocity

Fresh water	Short period	10m/s
	Continuous	7m/s
Sea water	Short period	10m/s
	Continuous	5m/s
Air（ambient temp.）	Short period	80m/s
	Continuous	30m/s

The maximum velocity shown is estimated as an average in the fully open state.

Remark: "Short period" means a few minutes creating high velocity until the disc angle reaches the designated position.

508V Bare shaft （01: 50mm to 350mm, 02: 400mm to 600mm）

■508V-01 (50mm to 350mm) / 508V-02 (400mm)

Nominal size		Dimension (mm)													Approx. Mass (kg)
mm	inch	φd	φD	L	H_1	H_2	a_1	a_2	□S_1	φd_2	b	t_2	t	Flanges	
50	2	48	101	43	76	142	22	10.5	8	10	—	—	14	F07	2.5
80	3	75	131	46	95	158	23	11.5	12	14	—	—	14	F07	4.0
100	4	96	156	52	110	169	23	11.5	12	14	—	—	14	F07	5.3
150	6	143	217	56	160	202	28	16.5	14	18	—	—	14	F10	10.8
200	8	188	268	60	182	227	30	20	18	22	—	—	14	F10	15
250	10	248	322	68	255	280	35	30	24	28	—	—	14	F10	29
300	12	296	375	78	284	312	35	30	24	32	—	—	16	F12	42
350	14	332	420	92	320	360	35	30	24	32	—	—	16	F12	62
400	16	390	477	102	343	380	65	59	—	46	14	3.5	20	F14	112

■Flange dimensions

Flanges	□S	φC_1	N	B.H.
F07	70	70	4	9
F10	102	102	4	11
F12	125	125	4	13
F14	140	140	4	19
F16	165	165	4	23

Stem design	
	01: Square
	02: Round with key

■508V-02 (450mm to 600mm)

Nominal size		Dimension (mm)																Approx. Mass (kg)
mm	inch	φd	φD		L	H_1	H_2	a_1	a_2	φd_2	b	t_2	t	D_1	C_1	N	B.H.	
			JIS10K	JIS16K														
450	18	439	532	532	114	379	420	60	53	47	12	3.5	20	200	170	4	19	143
500	20	490	610	610	127	422	450	60	53	47	12	3.5	20	200	170	4	19	196
600	24	583	826	720	154	494	530	75	65	65	18	6	25	260	220	4	23	333 (318)

■508V 50mm, 80mm

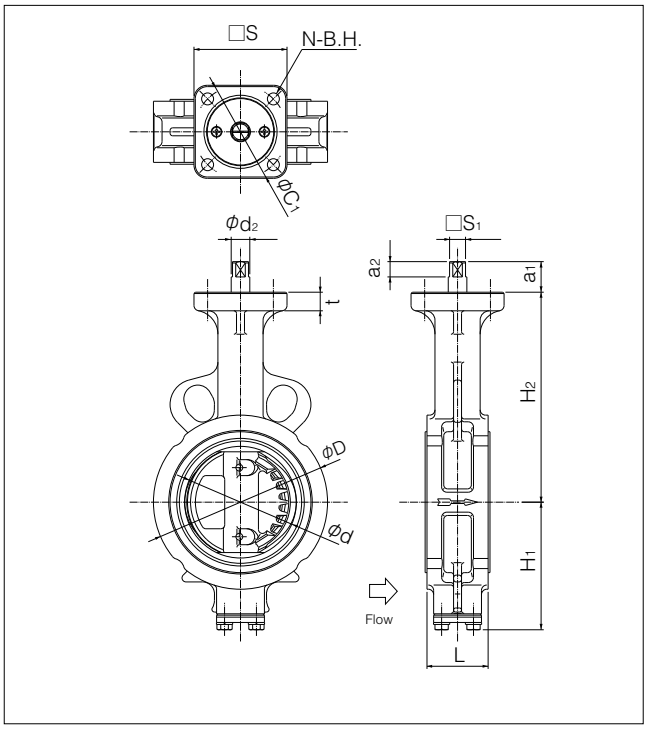

■508V 100mm to 350mm

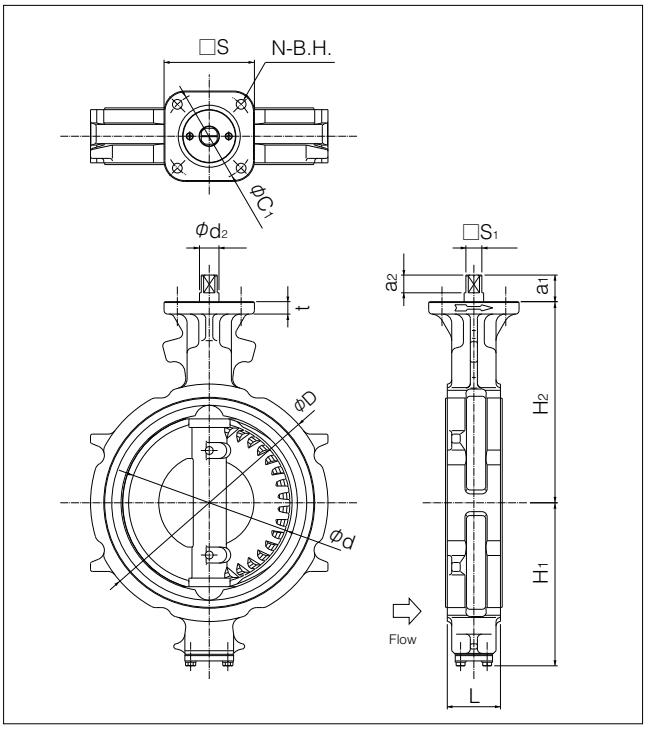

■508V　400mm

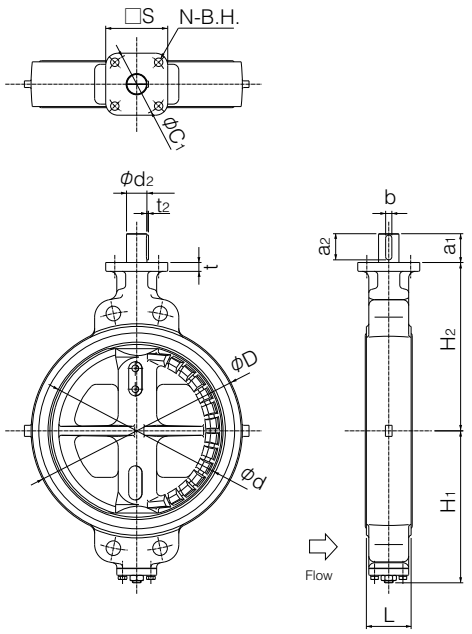

■508V　450mm, 500mm

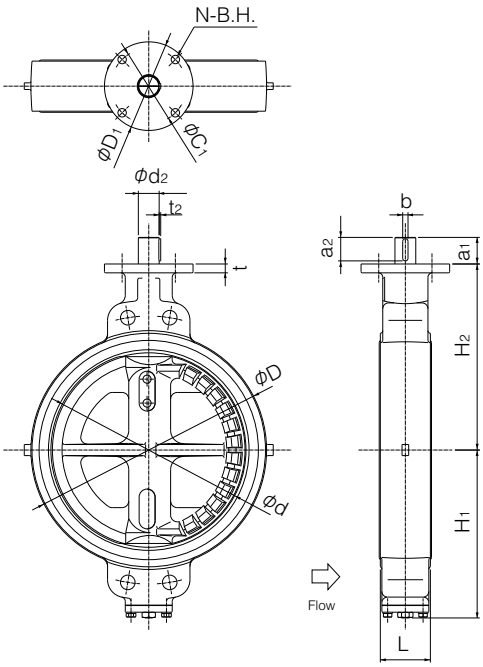

■508V　600mm

For JIS10K, BS4504 PN10 and DIN NP10 BS10 Table E

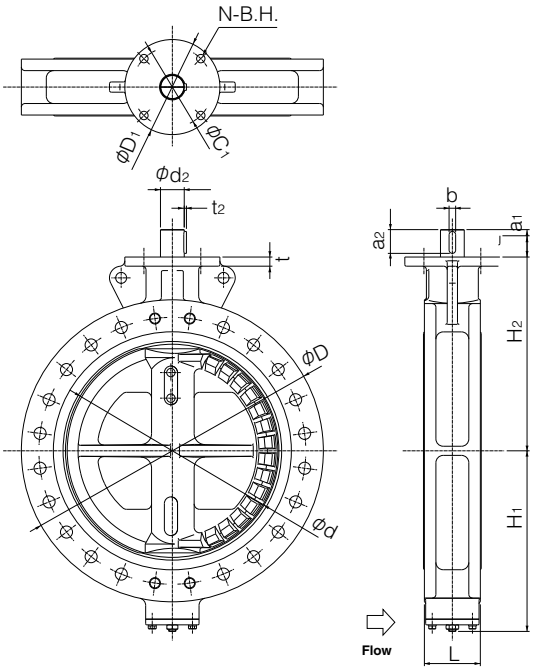

■508V　600mm

For JIS16K, ANSI 150Lb, BS4504 PN16 and DIN NP16

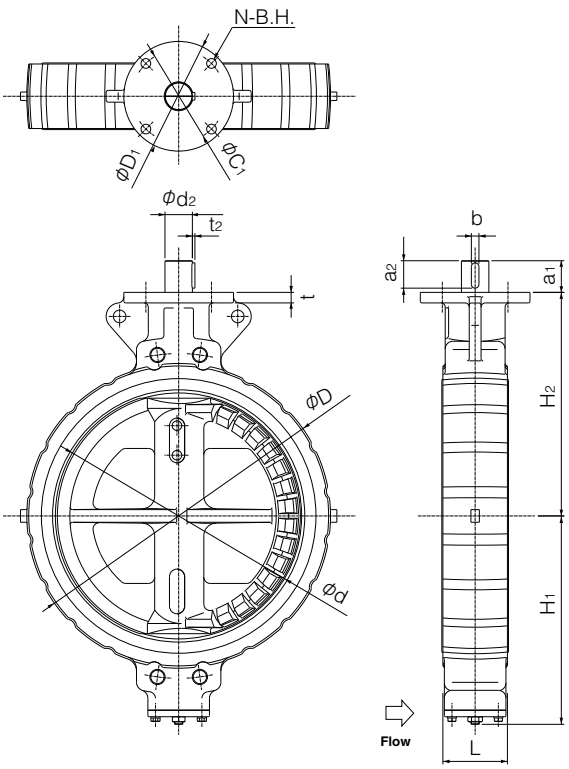

508V

Worm gear type　508V-2U（50mm to 400mm）/ 508V-2S（450mm to 600mm）

Nominal size		Dimension (mm)										Gear type	Approx. Mass (kg)
mm	inch	φd	φD	L	H_1	H_2	H_3	E	K	F	φW		
50	2	48	101	43	76	142	29.5	36	46	160	100	2U-0	4.9
80	3	75	131	46	95	158	29.5	36	46	160	100	2U-1	6.4
100	4	96	156	52	110	169	29.5	36	46	160	100	2U-1	7.7
150	6	143	217	56	160	202	34.5	44	53	173.5	160	2U-2	15.1
200	8	188	268	60	182	227	41.5	67	75	198	200	2U-3	22.8
250	10	248	322	68	255	280	41.5	67	75	198	200	2U-3	37
300	12	296	375	78	284	312	48	87.5	90	222.5	200	2U-4	57
350	14	332	420	92	320	360	48	87.5	90	222.5	200	2U-4	77
400	16	390	477	102	343	380	50	90	105	266	280	2U-5	126
450	18	439	532	114	379	420	55	117	164	335	355	MGH-3	178
500	20	490	610	127	422	450	55	117	164	335	355	MGH-3	230
600	24	583	826 (720)	154	494	530	65	140	198	400	450	MGH-4	393 (363)

※A handle lock is attached for manual gear.
※(　　)shows the data for JIS 16K 600mm.

■508V-2U/2S

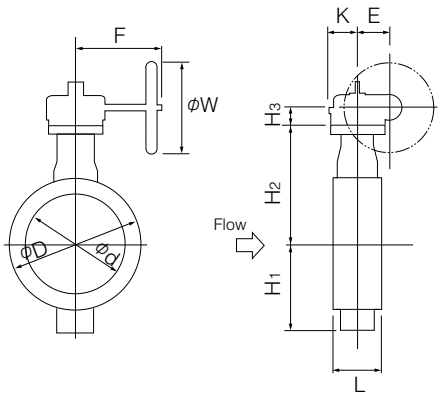

■2U/2S Installation direction

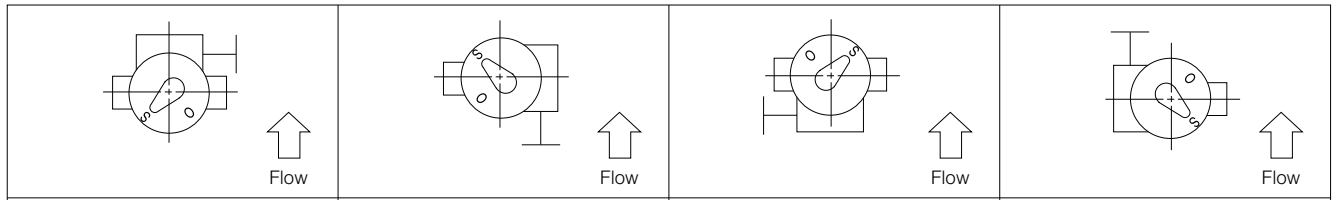

2UA/2SA	2UB/2SB	2UC/2SC	2UD/2SD

Double-acting pneumatic cylinder type 508V-7E(50mm to 300mm)

Nominal size		Dimension (mm)											Cylinder type	Approx. Mass (kg)
mm	inch	φd	φD	L	H_1	H_2	H_3	H_4	A	P	f_1	f_2		
50	2	48	101	43	76	142	125	—	274	116	57	29	T35	5
80	3	75	131	46	95	158	168	—	325	142	75	47	T85	9
100	4	96	156	52	110	169	168	—	325	142	75	47	T85	10
150	6	143	217	56	160	202	203	—	434	176	79	57	T200	19
200	8	188	268	60	182	227	231	—	511	214	91	69	T380	29
250	10	248	322	68	255	280	269	—	668	270	118	85	T750	54
300	12	296	375	78	284	312	269	—	668	270	118	85	T750	67

● A free angle adjuster comes with the cylinder.

■508V-7E

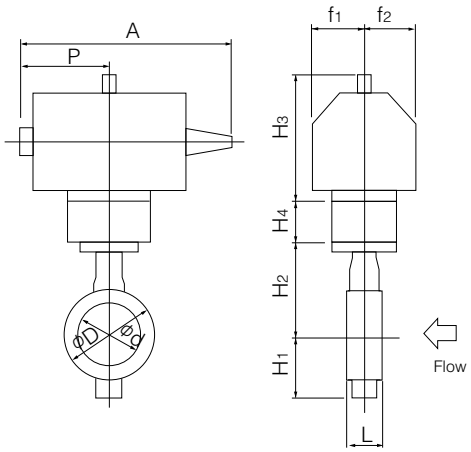

■7E Installation direction

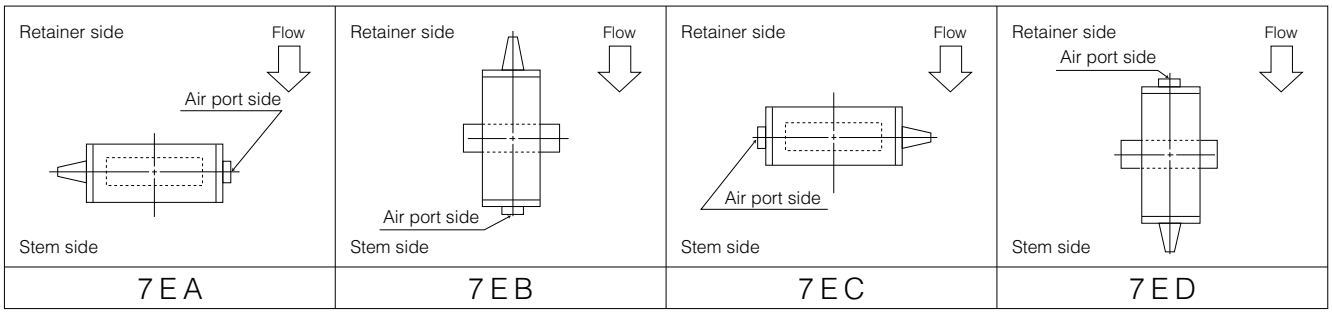

7EA	7EB	7EC	7ED

Double-acting pneumatic cylinder type 508V-3A（350mm to 600mm）

Nominal size		Dimension (mm)										Cylinder type	Approx. Mass (kg)
mm	inch	φd	φD	L	H_1	H_2	H_3	A	P	f_1	f_2		
350	14	332	420	92	320	360	359	868	487	100	164	TGA-125	112
400	16	390	477	102	343	380	359	868	487	100	164	TGA-125	156
450	18	439	532	114	379	420	407	951	534	100	180	TGA-140	201
500	20	490	610	127	422	450	435	1092	609	130	202	TGA-160	302
600	24	583	826(720)	154	494	530	570	1339	740	160	253	TGA-200	552(522)

Remark: Value in brackets indicates 3Q (air to close).
●A free angle adjuster comes with the pneumatic cylinder.

■508V-3A

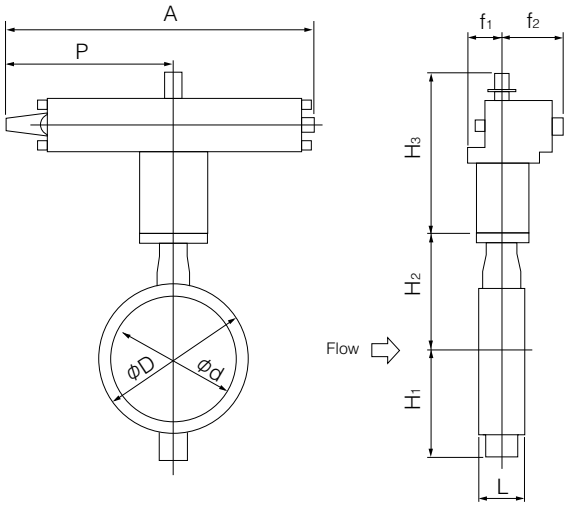

■3A Installation direction

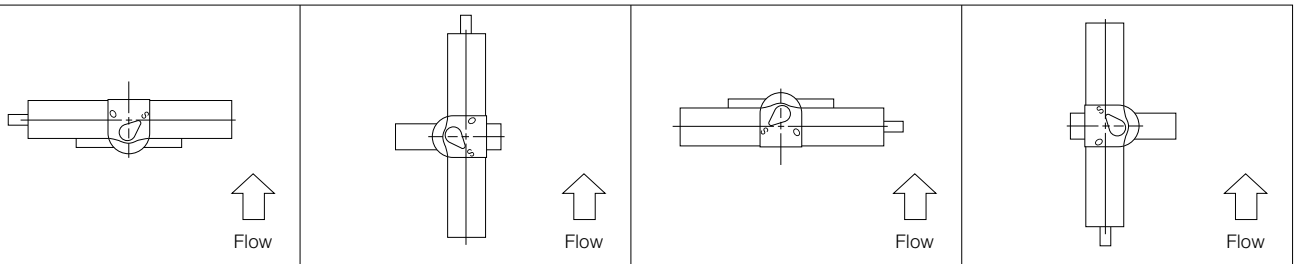

3AA	3AB	3AC	3AD

Single-acting pneumatic cylinder type 508V-7G(Air to open: 50mm TO 150mm) / 302A-7F(Air to close: 50mm to 150mm)

■508V-7G

Nominal size		Dimension (mm)										Cylinder type	Approx. Mass (kg)
mm	inch	φd	φD	L	H_1	H_2	H_3	A	P	f_1	f_2		
50	2	48	101	43	76	142	168	406	183	75	47	T85S	9
80	3	75	131	46	95	158	203	534	226	79	57	T200S	15
100	4	96	156	52	110	169	231	635	276	91	69	T380S	25
150	6	143	217	56	160	202	269	848	360	118	85	T750S	44

■508V-7F

Nominal size		Dimension (mm)											Cylinder type	Approx. Mass (kg)
mm	inch	φd	φD	L	H_1	H_2	H_3	H_4	A	P	f_1	f_2		
50	2	48	101	43	76	142	168	66	439	183	75	47	T85S	9
80	3	75	131	46	95	158	203	84	539	226	79	57	T200S	15
100	4	96	156	52	110	169	231	92	665	276	91	69	T380S	25
150	6	143	217	56	160	202	269	104	853	360	118	85	T750S	44

● A free angle adjuster comes with the cylinder.

■508V-7G

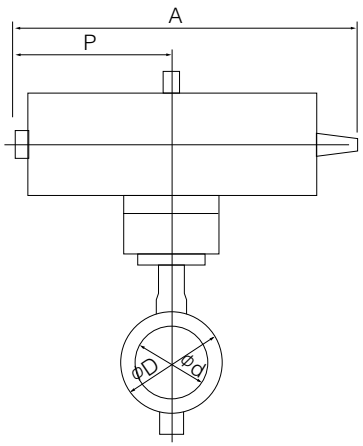

■508V-7F

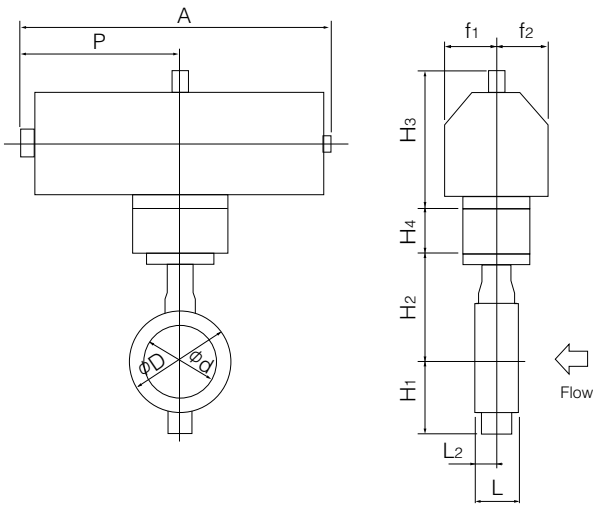

■7F Installation direction

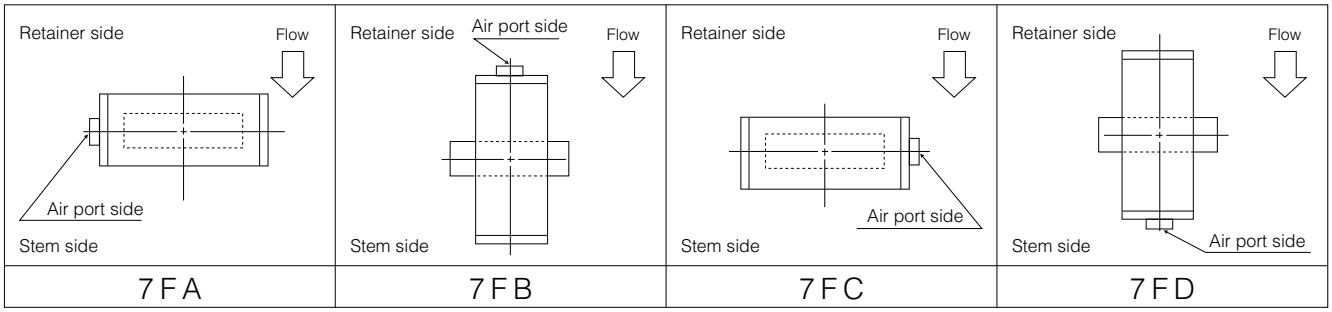

Single-acting pneumatic cylinder type 508V-3U(Air to open: 200mm to 600mm) / 508V-3K(Air to close: 200mm to 600mm)

Nominal size		Dimension (mm)										Cylinder type	Approx. Mass (kg)
mm	inch	φd	φD	L	H_1	H_2	H_3	A	P	f_1	f_2		
200	8	188	268	60	182	227	307	1030	670 (585)	70	165	TG-10S	66
250	10	248	322	68	255	280	307	1180	820 (720)	94	206	TG-12S	125
300	12	296	375	78	284	312	307	1180	820 (720)	94	206	TG-12S	143
350	14	332	420	92	320	360	340	1355	965 (865)	131	257	TG-14S	259
400	16	390	477	102	343	380	340	1355	965 (865)	131	257	TG-14S	313
450	18	439	532	114	379	420	474	1790	1230 (1095)	164	348	TG-20S	562
500	20	490	610	127	422	450	474	1790	1230 (1095)	164	348	TG-20S	614
600	24	583	826[720]	154	494	530	474	1790	1230 (1095)	164	348	TG-20S	751[721]

Remark: Value in brackets indicates 3Q (air to close).
※Brackets indicates the data for JIS 16K 600mm.
●A free angle adjuster comes with the pneumatic cylinder.

■508V-3K

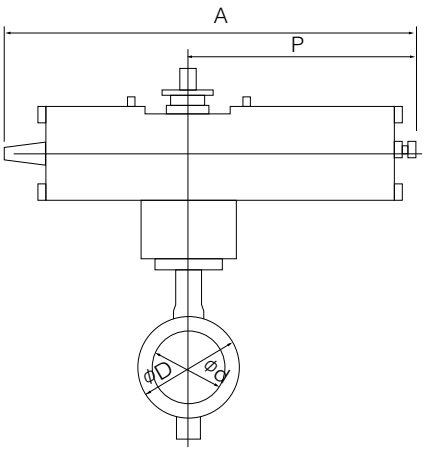

■508V-3U

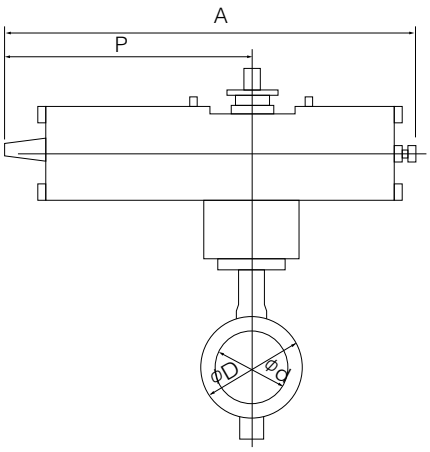

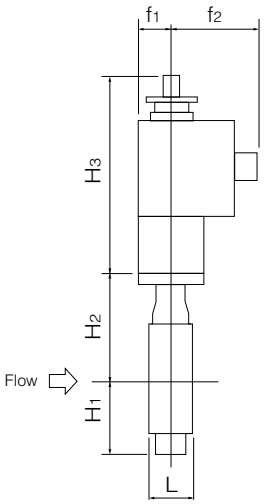

■3K Installation direction

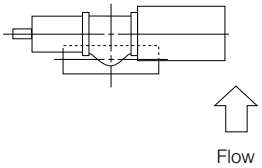	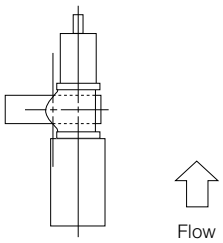	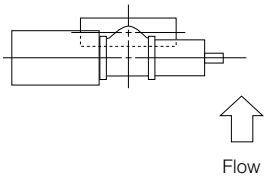	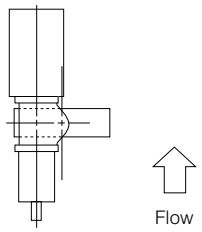
3KA	3KB	3KC	3KD

■3U Installation direction

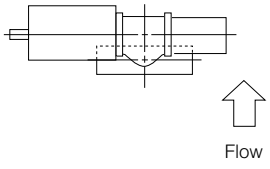	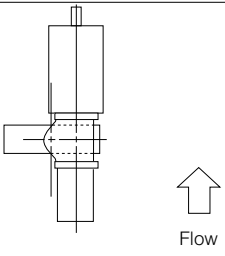	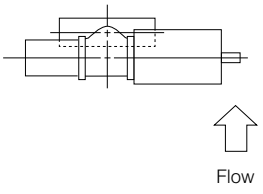	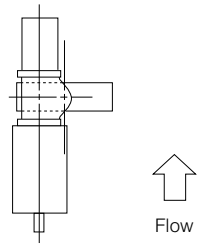
3UA	3UB	3UC	3UD

Single phase electric motor type 508V-4 I(50mm to 400mm)

Nominal size		Dimension (mm)										Motor type	Approx. Mass (kg)
mm	inch	φd	φD	L	H_1	H_2	H_3	A	P	F	K		
50	2	48	101	43	76	142	150	202	100	85	54	4 I-0	6.7
80	3	75	131	46	95	158	150	202	100	85	54	4 I-0	8.2
100	4	96	156	52	110	169	165	252	138	126	65	4 I-1	11.7
150	6	143	217	56	160	202	198	310	167	154	85	4 I-2.5	23.6
200	8	188	268	60	182	227	198	310	167	154	85	4 I-2.5	28.6
250	10	248	322	68	255	280	230	388	223	246	136	4 I-3	53
300	12	296	375	78	284	312	230	388	223	246	136	4 I-3	66
350	14	332	420	92	320	360	230	388	223	246	136	4 I-3	80
							255	388	223	246	136	4 I-4	91
400	16	390	477	102	343	380	230	388	223	246	136	4 I-4	131

Remark: For 350mm type with accessories below for control type 4I-4 should be selected.

- Micom unit
- Servo unit
- Speed control cnit
- Potentiometer

■508V-4 I

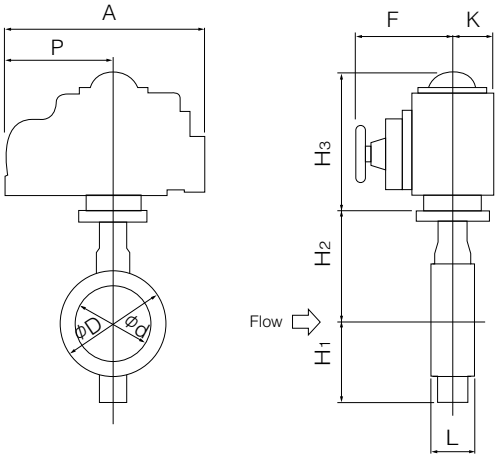

■4I Installation direction

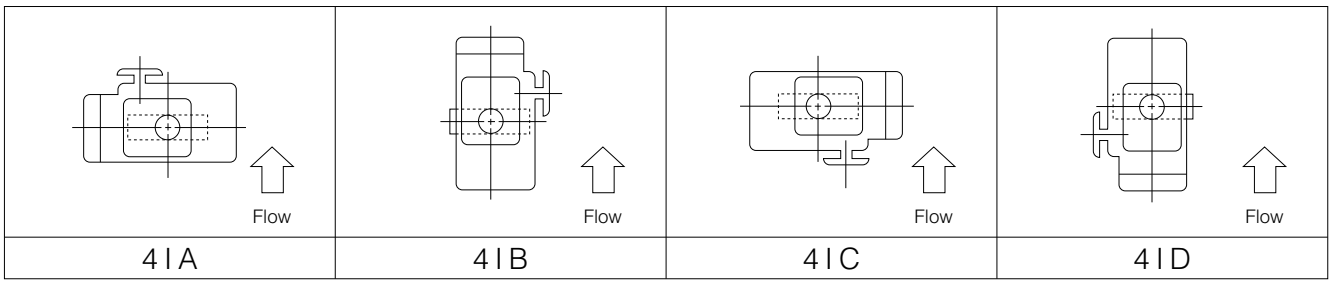

4 I A	4 I B	4 I C	4 I D

Three phase motor actuator type 508V-4L（300mm to 600mm）

Nominal size		Dimension (mm)											Motor type	Approx. Mass (kg)
mm	inch	φd	φD	L	H_1	H_2	H_3	E	K	F	M	P		
300	12	296	375	78	284	312	414	85	126	496	357	190	LTKD-01 0.2kW/ DGH-2	118
350	14	332	420	92	320	360	414	85	126	496	357	190	LTKD-01 0.2kW/ DGH-2	131
400	16	390	477	102	343	380	457	117	164	532	370	230	LTKD-01 0.4kW/ MGH-3	223
450	18	439	532	114	379	420	537	140	198	592	395	230	LTKD-02 0.75kW/ MGH-4	304
500	20	490	610	127	422	450	537	140	198	592	395	230	LTKD-02 0.75kW/ MGH-4	356
600	24	583	826(720)	154	494	530	604	210	293	748	440	360	LTKD-05 0.75kW/ MGH-5	660(630)

※Brackets indicate the data for JIS 16K 600mm.

■508V-4L

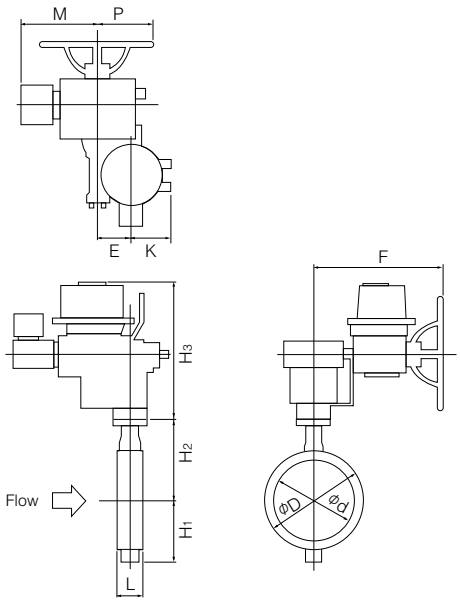

■4L Installation direction

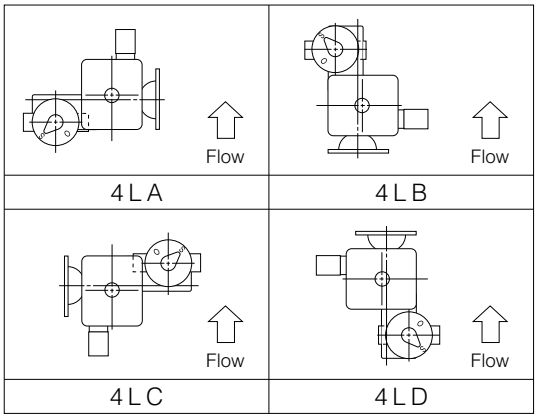

508V-6X（Air to open: 50mm to 200mm）/ 508V-6W（Air to close: 50mm to 200mm）with diaphragm actuator

Nominal size		Dimension (mm)											Diaphragm type	Approx. Mass (kg)
mm	inch	φd	φD	L	H_1	H_2	H_3	A	P	f_1	f_2	f_3		
50	2	48	101	43	76	142	333	310	126	140	164	36	280H	37
80	3	75	131	46	95	158	333	310	126	140	164	36	280H	38
100	4	96	156	52	110	169	333	310	126	140	164	36	280H	39
150	6	143	217	56	160	202	381	440	185	125	200	50	400H	75
200	8	188	268	60	182	227	381	440	185	125	200	50	400H	79

Remarks: H_3 shows the dimension when the positioner (TCE2000) is installed.
The H3 dimension will change depending on the positioner type.

■508V-6X/6W

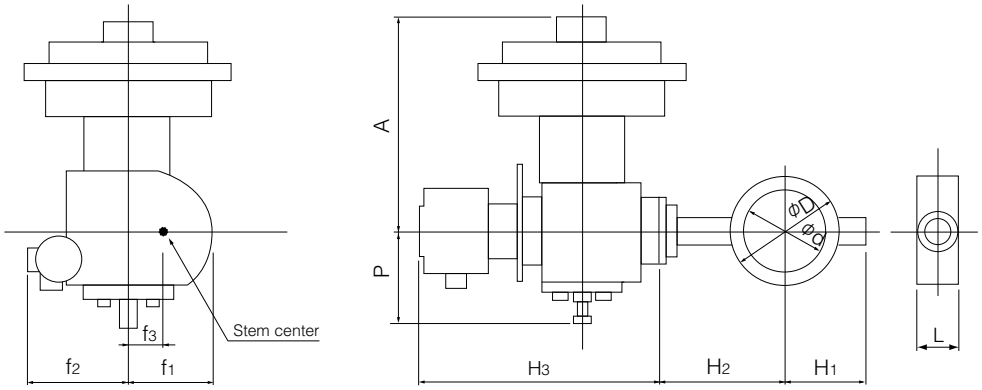

■6X Installation direction

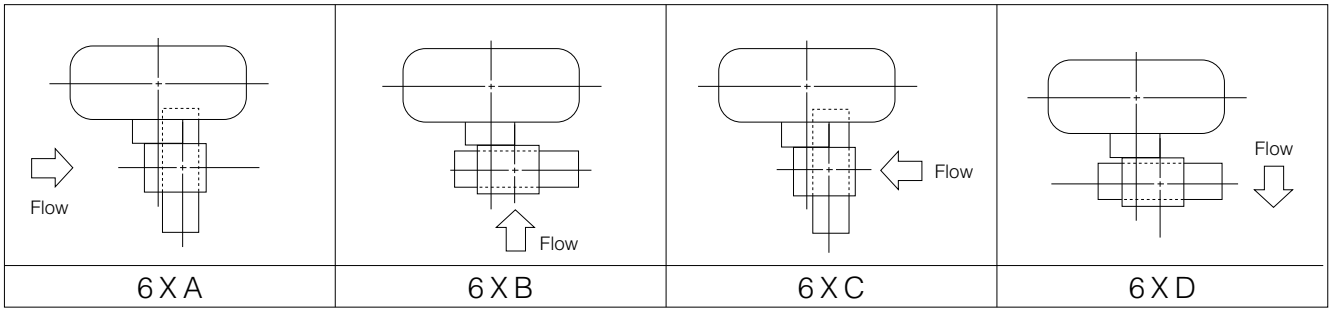

6XA	6XB	6XC	6XD

■6W Installation direction

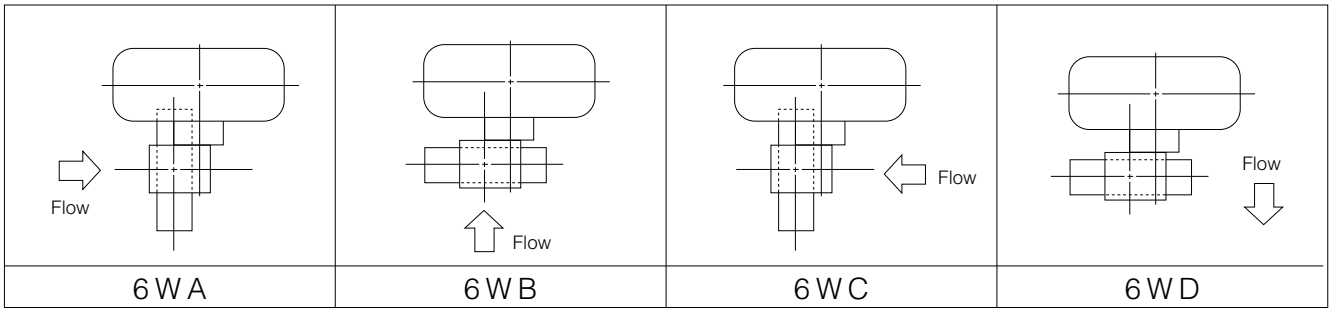

6WA	6WB	6WC	6WD

508V Cv Value/Pressure Loss Coefficient

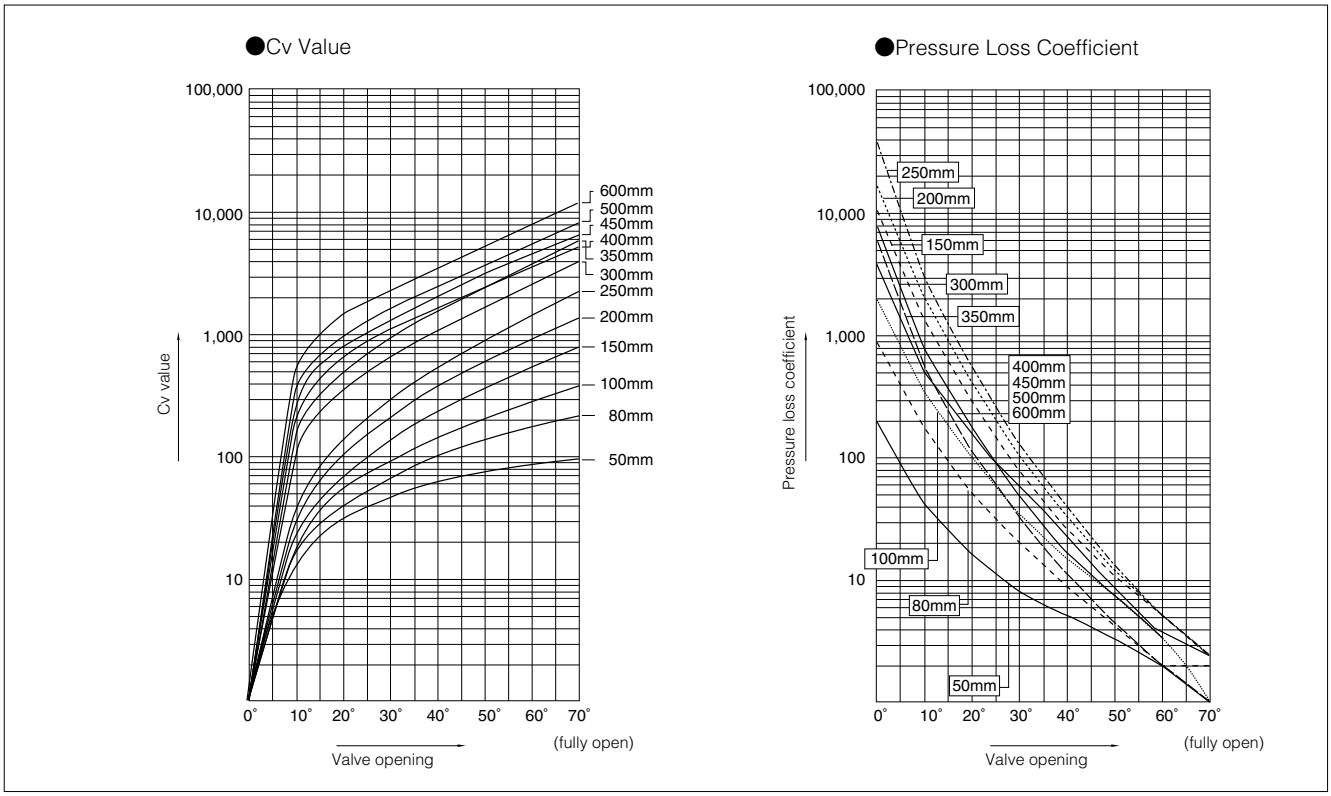

508V Cv Value

Nominal size		Valve opening						
mm	inch	10°	20°	30°	40°	50°	60°	70°
50	2	16	32	48	63	76	87	94
80	3	19	41	68	101	139	180	218
100	4	24	55	94	143	203	281	383
150	6	26	72	140	239	375	555	790
200	8	38	105	215	380	600	920	1380
250	10	42	145	300	550	910	1480	2260
300	12	118	350	670	1120	1700	2580	4000
350	14	160	500	980	1600	2450	3800	5800
400	16	249	670	1080	1650	2510	3650	5230
450	18	316	848	1370	2090	3180	4620	6620
500	20	390	1050	1690	2590	3920	5710	8170
600	24	561	1500	2430	3720	5640	8220	11800

508V Pressure Loss Coefficient

Nominal size		Valve opening						
mm	inch	10°	20°	30°	40°	50°	60°	70°
50	2	65	16	7	4	3	2	2
80	3	223	48	17	8	4	2	2
100	4	420	78	27	11	6	3	2
150	6	1640	219	57	19	8	4	2
200	8	2360	310	74	24	9	4	2
250	10	4640	390	91	27	10	4	2
300	12	1210	138	38	13	6	3	1
350	14	1030	106	28	10	4	2	1
400	16	727	100	39	17	7	3	2
450	18	723	100	38	17	7	3	2
500	20	733	101	39	17	7	3	2
600	24	741	104	39	17	7	3	2

508V Pressure Recovery Coefficient (F_L) and Cavitation Coefficient (Kc)

Valve opening	10°	20°	30°	40°	50°	60°	70°
Pressure recovery coefficient (F_L)	0.85	0.80	0.78	0.76	0.73	0.71	0.70
Cavitation coefficient (Kc)	0.55	0.50	0.47	0.45	0.40	0.37	0.32

508V Applicable pipe list in case of A

Nominal size		SGP	STPY	Sch20	Sch40	Sch10S	Sch20S	Minimum internal diameters of piping (mm)
mm	inch							
50	2	○	–	○	○	○	○	34
80	3	○	–	○	○	○	○	70
100	4	○	–	○	○	○	○	91
150	6	○	–	○	○	○	○	144
200	8	○	–	○	○	○	○	194
250	10	○	–	○	○	○	○	246
300	12	○	–	○	○	○	○	294
350	14	○	○	○	○	–	–	327
400	16	○	○	○	×	–	–	387
450	18	○	○	○	×	–	–	434
500	20	○	○	○	×	–	–	484
600	24	–	○	○	×	–	–	581

508V Applicable pipe list in case of B

Nominal size		SGP	STPY	Sch20	Sch40	Sch10S	Sch20S
mm	inch						
50	2	○	–	○	○	○	○
80	3	○	–	○	○	○	○
100	4	○	–	○	○	○	○
150	6	○	–	○	○	○	○
200	8	○	–	○	○	○	○
250	10	○	–	○	○	○	○
300	12	○	–	○	○	○	○
350	14	○	○	○	○	–	–
400	16	○	○	○	○	–	–
450	18	○	○	○	○	–	–
500	20	○	○	○	○	–	–
600	24	–	○	○	○	–	–

Remark 1: ○=Applicable ×=Not applicable
Remark 2: Butterfly valves are inserted into a pipe that was fitted with the disc when fully open.
In cases where you are using a pipe or flange that is less than the minimum inner pipe diameter, use is still possible if means are taken such as inserting a spacer between the valve and flange.
For details, please consult us.

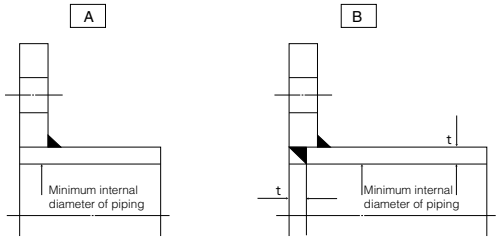

508V Applicable Flange Standard

Nominal size		JIS				ANSI	BS4504		DIN		BS10
mm	inch	5K	10K	16K	20K	150Lb	PN10	PN16	NP10	NP16	Table E
50	2	D	○	○	○	○	○	○	○	○	○
80	3	○	○	○	○	○	○	○	○	○	○
100	4	○	○	○	○	○	○	○	○	○	○
150	6	○	○	○	○	○	○	○	○	○	○
200	8	○	○	○	○	○	○	○	○	○	○
250	10	×	○	○	×	○	○	○	○	○	○
300	12	×	○	○	×	○	○	○	○	○	○
350	14	×	○	○	×	○	○	○	○	○	○
400	16	×	D	D	×	D	D	D	D	D	D
450	18	×	D	D	×	D	D	D	D	D	D
500	20	×	D	D	×	D	D	D	D	D	D
600	24	×	T	T	×	T	T	T	T	T	T

○ : Can be used without flange drilling.
D : With flange drilling
T : With flange tapping
× : Not applicable

508V Piping Bolt and Nut Sizes

Nominal size		JIS5K		JIS10K		JIS16K		ANSI 150Lb	
mm	inch	Long Bolts and Nuts	Setting Bolts	Long Bolts and Nuts	Setting Bolts	Long Bolts and Nuts	Setting Bolts	Long Bolts and Nuts	Setting Bolts
50	2	4-M12×105	—	4-M16×120	—	8-M16×125	—	4-U5/8-11UNCX140	—
80	3	4-M16×120	—	8-M16×125	—	8-M20×135	—	4-U5/8-11UNCX140	—
100	4	8-M16×130	—	8-M16×130	—	8-M20×150	—	8-U5/8-11UNCX150	—
150	6	8-M16×130	—	8-M20×155	—	12-M22×165	—	8-U3/4-10UNCX165	—
200	8	8-M20×150	—	12-M20×155	—	12-M22×170	—	8-U3/4-10UNCX165	—
250	10	—	—	12-M22×175	—	12-M24×190	—	12-U7/8- 9UNCX195	—
300	12	—	—	16-M22×185	—	16-M24×210	—	12-U7/8- 9UNCX205	—
350	14	—	—	16-M22×195	—	16-M30(P3)×225	—	12-U1 - 8UNCX240	—
400	16	—	—	16-M24×220	—	—	—	16-U1 - 8UNCX255	—
450	18	—	—	20-M24×230	—	—	—	16-U1 1/8- 8UNX280	—
500	20	—	—	20-M24×250	—	—	—	20-U1 1/8- 8UNX295	—
600	24	—	—	20-M30×290	8-M30×65	—	—	16-U1 1/4- 8UNX340	8-U1 1/4- 8UNX85

Remark: Bold and nut material: SS400/SS400 and SUS 304/SUS04.
Long bold uses full threaded bolt.
Use thin hexagon nut. (Use heavy hexagon nut for ANSI150Lb.)
A unified screw should have 8 threads per inch if its nominal diameter exceeds 1 inch.

Example

Long bolts: 12 - M22 × 185
N M L

Setting bolts: 4 - M30 × 95
(Hexagon bolts) N M L

Long bolts and nuts (full thread)

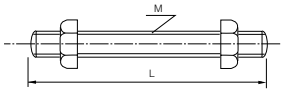

Setting bolts (Hexagon bolts)

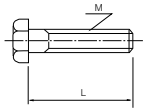

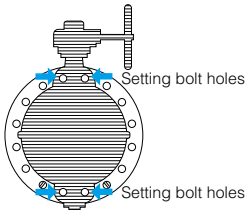

DTM



Diaphragm | Worm Gear | Pneumatic Cylinder | Motorized

General Description

The Ultimate Rotary Control DTM provides high accurate control under most critical process conditions including higher pressure drop liquid/gas applications.
DTM series valves can be supplied with or without integrated cavitation breaker in order to reduce noise level by max. 30 dB. Valves in this series also exhibit higher anti-cavitation capability.

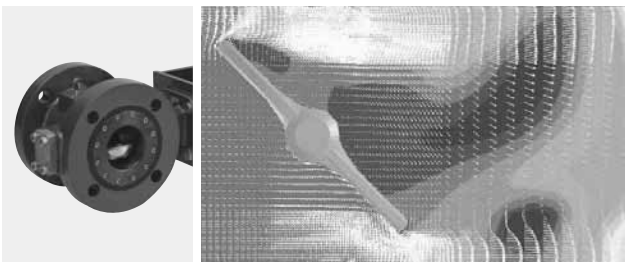

Conventional Butterfly Valve
Local static pressure drop and quick pressure recovery causes cavitation



DTM Series

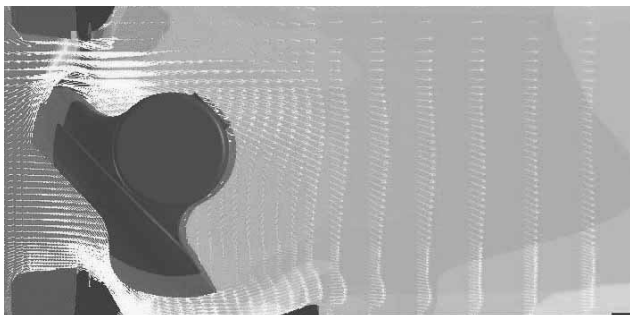

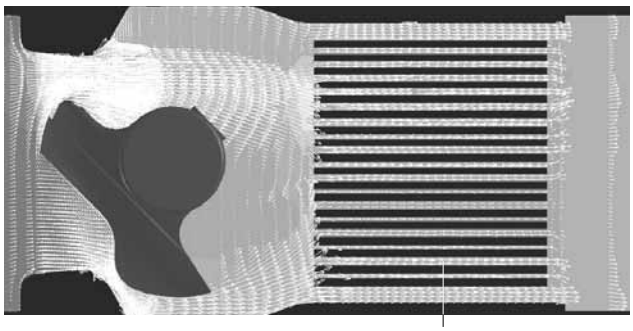

Cavitation breaker

(Note) Colors show the pressure distribution. Red means a high pressure and blue means a low pressure.

Features and Benefits

The ultimate rotary control DTM valve provides accurate control and low noise levels, even at high velocities.

Wide rangeability, 100:1

Improves flow control with a wide range of control from closed to fully open.

Noise reduction by 20dB or more

Features the latest anti-cavitation technology pioneered by TOMOE that delivers superior control and low turbulence in the line. As a result, there is a 20dB reduction in flow induced valve noise and associated damage to piping and equipment compared to conventional valves.

Can handle high differential pressure

Capable of handling extremely high differential pressure with control in the opening range of 0 – 30% and differential pressures greater than 2MPa.

High performance seat structure

Excellent durability and high performance characteristics achieved with metal seat design. Seat leakage of Class V and Rate A for a soft seal.

Ease of maintenance

Designed for easy maintenance – for example, seat and cavitation breaker can be replaced simply and quickly.

High performance diaphragm actuator

A new high performance diaphragm pneumatic actuator that is compact, highly accurate and has proven long life in the field has been designed to manage the DTM valve actuation process with optimum efficiency.

Optional RPTFE seat

The DTM is also available with an RPTFE seat which provides zero leakage to ISO 5208 Rate A.

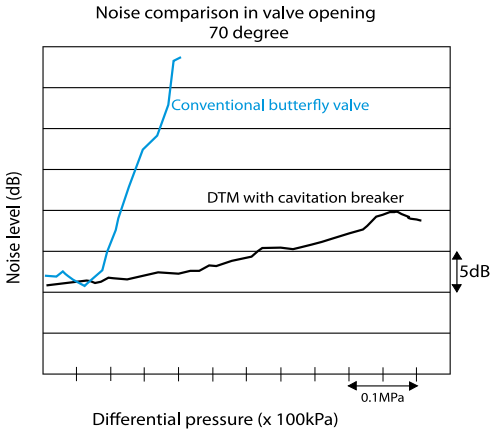

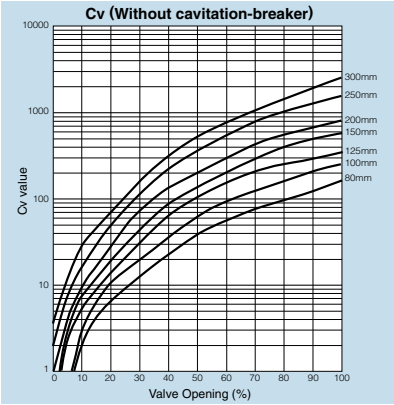

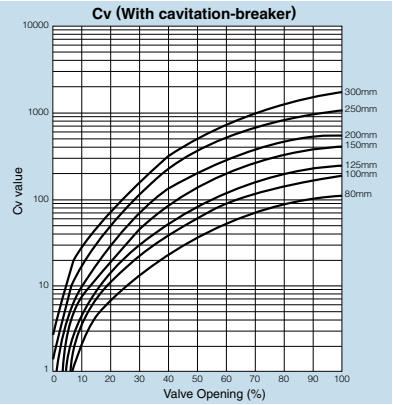

Standard Specifications

Valve type		Rotary control butterfly valve (with low noise characteristics)	
Valve nominal size		80, 100, 125, 150, 200, 250, 300mm	
Pressure rating		ASME B 16.5 Class 150, 300mm	
Applicable flange standard		JIS10, 16, 20, 30K, ASME B 16.5 CLASS 150, 300	
Body Style		Double flanged	
Face-to-face dimensions		IEC 60534-3-2 (JIS B 2005-3-2)	
Flow characteristics		Equal percent	
Rangeability		100:1	
Flow direction		Flowing from seat side	
Max. working pressure / Closed		Class 150 : 2MPa / Class 300 : 5.1MPa	
Max. differential pressure / Open by 30%		Class 150 : 0.8MPa / Class 300 : 2MPa	
Seat leakage		ANSI B 16.104 Class V (9ANSI/FCI 70-2)	ISO 5208 Rate A (Zero leakage)
Temperature range		-29 to 400 degrees C	-10 to 230 degrees C
Standard materials	Body	WCB or CF8M	
	Disc	CF8M	
	Stem	Stainless steel	
	Seat ring	Stainless steel	RPTFE
	Cavitation breaker	Stainless steel	
Applicable gaskets		Any standard gasket with inner/outer ring can be used	
Actuator		Diaphragm actuator, pneumatic cylinder, motorised	

※It is possible that seat leakage occur when fluid (e.g. powder and/or liquid) is solidified by working temperature and other cause. Consult us.
Please note that use with vertical line such as bottom area of discharge spout of hopper, and tank.

Chemically Resistant
Butterfly Valves

846T Wafer

847T Wafer

847Q Lugged

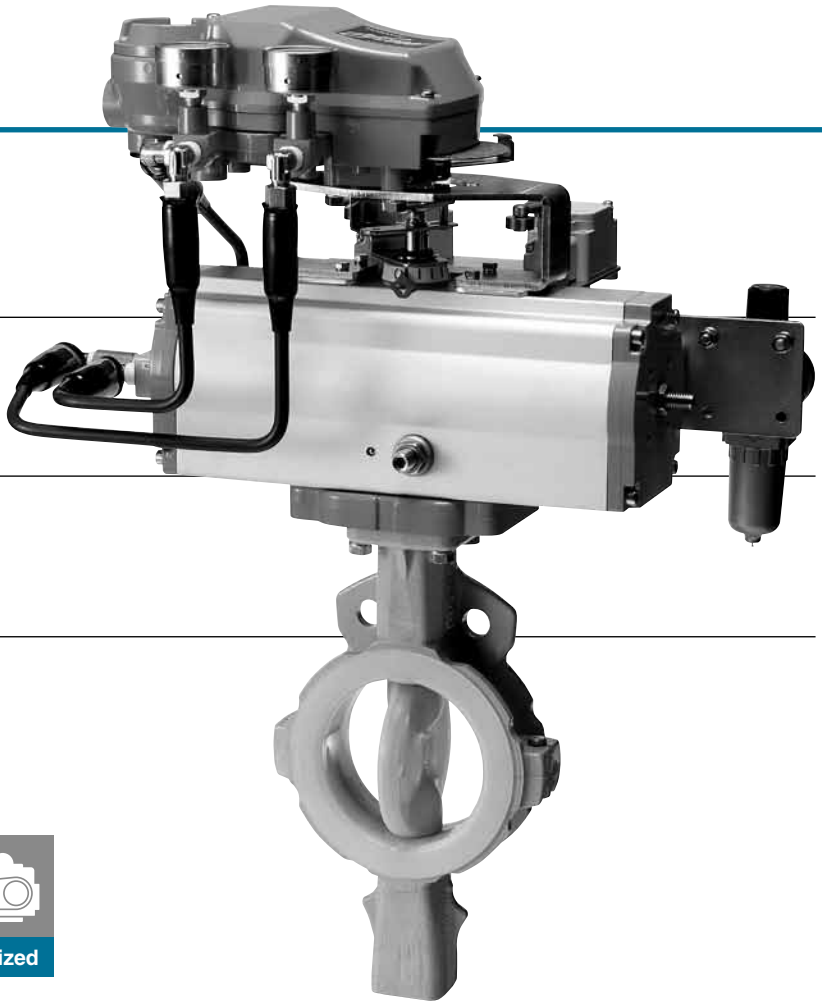

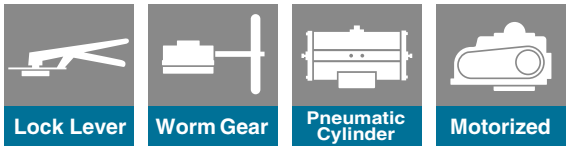

Features and Benefits

New design features of the TOMOE 847 series result in vastly improved sealing performance in applications where conditions are potentially hazardous.

High tension coil spring

(250, 300mm: coned disc spring)
Ensures a stable seal at both the upper and lower gland even at extreme temperatures or when thermal shock occurs.

Minimum 3mm PFA thickness

(250, 300mm: PTFE)
Seamfree PFA injection moulding (PTFE compression moulding) on the seat and disc to a minimum thickness of 3mm prevents permeation of dangerous fluids or gases.

No special gasket needed

Stable flange sealing performance is ensured by concentric circular grooves on the flange faces thereby eliminating the need for a special gasket when operating under specified temperatures.
The wider sealing area also ensures minimum "creep" at high temperatures.
Flange sealing mechanism is independent of the seating and gland seals which ensures there is no loss of line fluid.
Soft gaskets can be used when fitting the valve in the pipeline.

Total sealing

Valve structure includes primary, secondary and independent tertiary seal, ie. gland packing. There is also a fourth seal of O-rings on the top/bottom stems, ie. dust seal.

Lining

(50~200mm: PFA, 250~300mm: PTFE)
Seamless construction of the valve lining of the 847 Series ensures complete stability in all conditions.
Design and construction of conventional valves often means permeation of fluids or gases, particularly at high temperatures. By employing an injection moulding method and utilising the properties of PFA, PTFE at a minimum thickness of 3mm, the 847 Series is able to eliminate faults common to PTFE-lined valves of conventional design.

Pressure-Temperature Leakage Chart

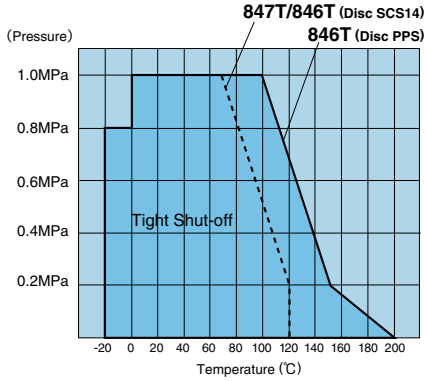

General Description

Chemically resistant butterfly valves. The unique construction of the TOMOE 847 Series provides superior strength and sealing properties essential in applications where conditions are potentially hazardous.

Sealing Properties

The upper and lower stem housings of the 847 Series valve have the same length high tension coil springs which provide stable sealing performance in cases of temperature change. Conventional valves usually employ a shorter spring in the lower stem housing. This can lead to a loading imbalance on the seat making it difficult to maintain consistent sealing performance.
The sealing design features a triple acting sealing mechanism controlled by the balanced spring forces. (250, 300mm: Coned disc springs).
In addition, stem seal leakage caused by excessive pipe flange damping forces is eliminated because the stem seal arrangement and the pipe flange seal are totally independent.

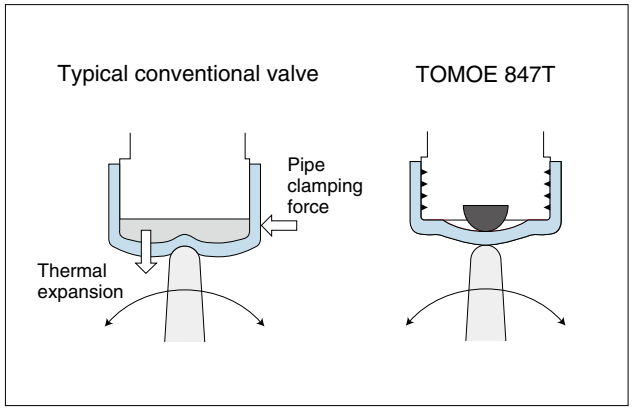

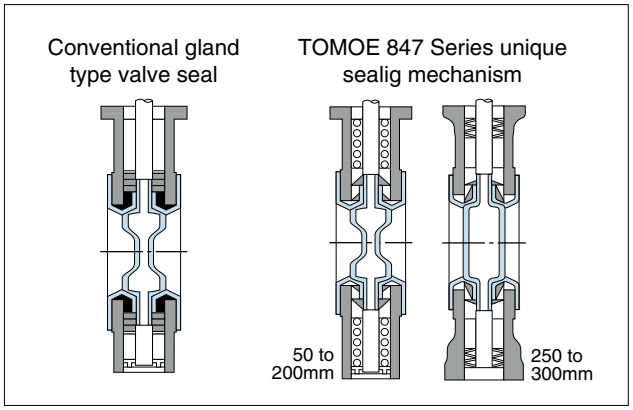

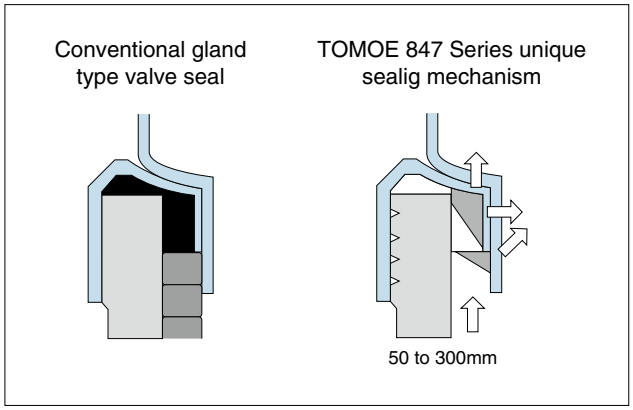

Standard Specifications

Type		846T	847T
Valve nominal size		65 to 300mm (8 sizes)	50 to 300mm (9 sizes)
Applicable flange standard		JIS 5K/10K, ANSI 125 lb/150 lb, ISO 7005-1 PN 6/10/16, BS10 Table E, DIN 2632 NP 6/10/16, BS 4504 PN 6/10/16	
Face-to-face dimensions		JIS B 2002 46 series/ ISO 5752 wafer butterfly valves (short)	
Max. working pressure ※1		1.0 MPa	
Body shell test		1.5 MPa	
Seat leak test		1.1 MPa	
Working temperature range		PPS disc: -20 to 120 degrees C Stainless disc: -20 to 200 degrees C	-20 to 200 degrees C
Working temperature in continuous use ※1		PPS disc: 0 to 80 degrees C Stainless disc: 0 to 150 degrees C	0 to 150 degrees C
Standard materials	Body	Ductile iron, FCD-S (A395)	
	Disc	PPS (65 to 200mm) SCS14 (CF8M)	50 to 200mm: SCS13(CF8) with PFA lining 250, 300mm: SCS 13 (CF8) with PTFE lining
	Stem	SUS329J1	420J2SS
	Seat ring	PFA (Backup rubber: Fluorocarbon rubber)	50 to 200mm: PFA/250, 300mm: PTFE (Backup rubber: Fluorocarbon rubber)
Coating		Up to 200mm : Epoxy resin coating (Munsell N7) 250 and 300mm : Polyester powder baking finish (Munsell N7)	

※1 "Woking temperature in continuous use" stands for the temperature continuously kept exceeding one hour.

846T/847T Expanded view of components

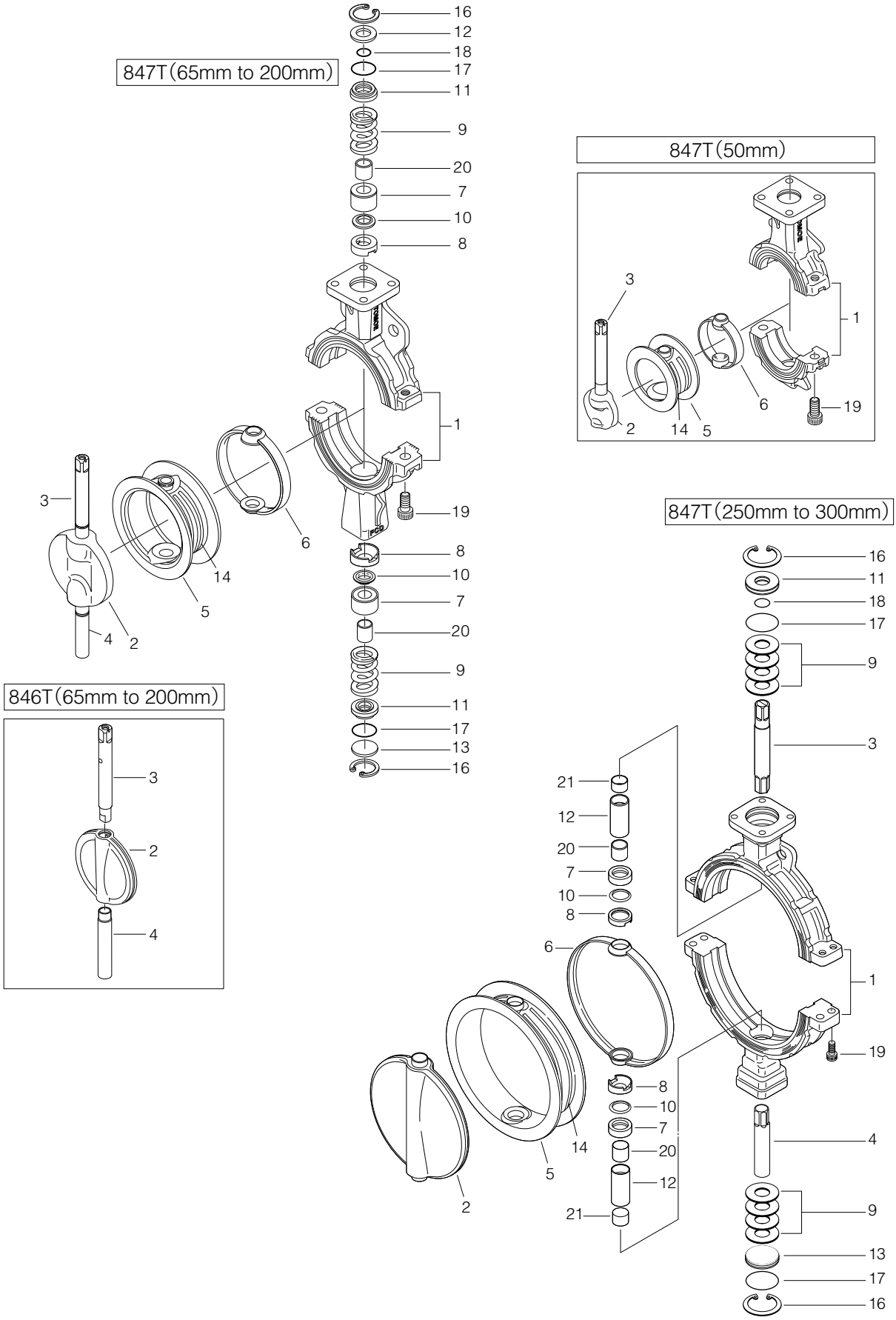

■846T/847T Parts list（846T: 65 to 200mm, 847T: 50 to 200mm）

No.	Description	Q'ty	Remarks
1	Body	1	
★ 2	Disc	1	
★ 3	Upper stem	1	
★ 4	Lower stem	1	
★ 5	Seat ring	1	See Remark 2.
★ 6	Back-up rubber	1	See Remark 2.
7	Bearing	1	50mm
		2	65mm to 200mm
8	Secondary ring	1	50mm
		2	65mm to 200mm
9	Spring	1	50mm
		2	65mm to 200mm
★ 10	Gland packing	1	50mm
		2	65mm to 200mm
11	Dust seal	1	50mm
		2	65mm to 200mm
12	Retaining spring	1	
13	Bottom cover	1	65mm to 200mm
14	Plate	4	Attach on Seat ring
16	C- ring	1	50mm
		2	65mm to 200mm
★ 17	O-ring	1	50mm
		2	65mm to 200mm
★ 18	O-ring	1	
19	Hexagon hole bolt	2	50mm to 150mm
		4	200mm
20	Bearing	1	50mm
		2	65mm to 200mm

■847T Parts list（250mm, 300mm）

No.	Description	Q'ty	Remarks
1	Body	1	
★ 2	Disc	1	
3	Upper stem	1	
4	Lower stem	1	
★ 5	Seat ring	1	
★ 6	Back-up rubber	1	
7	Bearing	2	
8	Secondary ring	2	
9	Spring	8	
★ 10	Gland packing	2	
11	Dust seal	1	
12	Bearing	2	
13	Bottom cover	1	
14	Plate	4	Attach on Seat ring
16	C-ring	2	
★ 17	O-ring	2	
★ 18	O-ring	1	
19	Hexagon hole bolt	2	250mm
		4	300mm
20	Bearing	2	
21	Bearing	2	

Remark 1: The ★ indicates recommended spare parts. They are supplied as "Seat ring set" with a small hexagonal spanner to remove set screws.

Remark 2: Item number 5 (seatring) and 6 (Back-up rubber) are supplied as a set. For 847T type, item number 2 (disc), 3 (upper stem) and 4 (lower stem) are supplied as an assembled unit.

847T Actuator selection chart

■847T

Model	Category	Size (mm / inch)								
		50	65	80	100	125	150	200	250	300
		2	2 1/2	3	4	5	6	8	10	12
1T	Standard / Heavy duty	1T-1				1T-2		1T-3		
2U	Standard / Heavy duty	2U-1			2U-2			2U-3		2U-4
7E, 3A	Standard / Heavy duty	T85			T200			T380	T750	TGA-125
7G,7F 3U,3K	Standard / Heavy duty	T200S			T380S		T750S	TG-10S	TG-12S / TG-14S	
4 I	Standard / Heavy duty	4 I-0			4 I-1		4 I-2	4 I-2.5	4 I-3	
4J	Standard / Heavy duty	SRJ-010				SRJ-020		SRJ-060		

Selection criteria		
	Standard	Select when none of the following heavy duty items apply.
	Heavy duty	Select when any of the following items apply. ①Working temperature is over 60 degrees C ②Powder or high viscosity fluids (consult us) ③Velocity more than 3 m/s ④Throttling ⑤Slow travelling time of valve: more than 30 sec. ⑥Dead end, pump outlet, emergency open

846T/847T Pressure-temperature rating

846T/847T (SCS14)

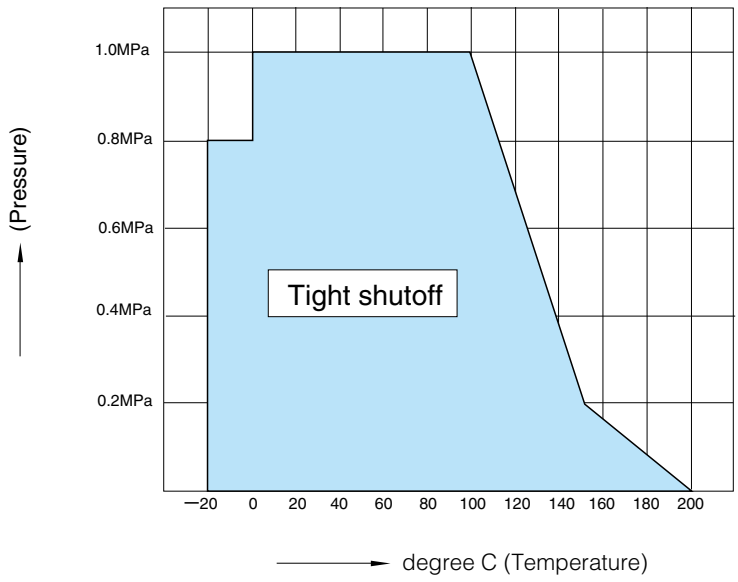

846T Actuator selection chart

■846T

Model	Category	Size (mm / inch)							
		65	80	100	125	150	200	250	300
		2 1/2	3	4	5	6	8	10	12
1T	Standard / Heavy duty	1T-1			1T-2		1T-3		
2U	Standard / Heavy duty	2U-1		2U-2			2U-3		2U-4
7E	Standard / Heavy duty	T85		T200			T380	T750	TGA-125
7G,7F 3U,3K	Standard / Heavy duty	T200S		T380S		T750S	TG-10S	TG-12S	TG-14S
4 I	Standard / Heavy duty	4 I-0		4 I-1		4 I-2	4 I-2.5	4 I-3	
4J	Standard / Heavy duty	SRJ-010			SRJ-020		SRJ-060		

Selection criteria		
	Standard	Select when none of the following heavy duty items apply.
	Heavy duty	Select when any of the following items apply. ①Working temperature is over 60 degrees C ②Powder or high viscosity fluids (consult us) ③Velocity more than 3 m/s ④Throttling ⑤Slow travelling time of valve: more than 30 sec. ⑥Dead end, pump outlet, emergency open

846T Pressure-temperature rating

846T (PPS)

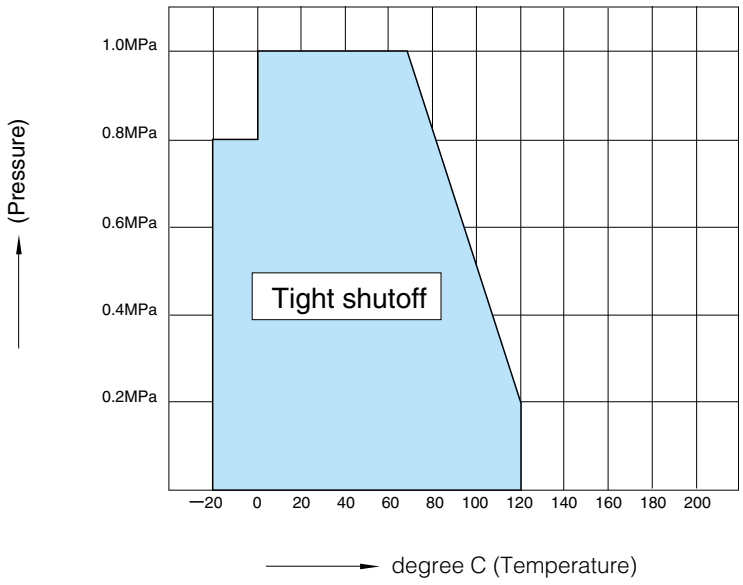

847T Wafer type

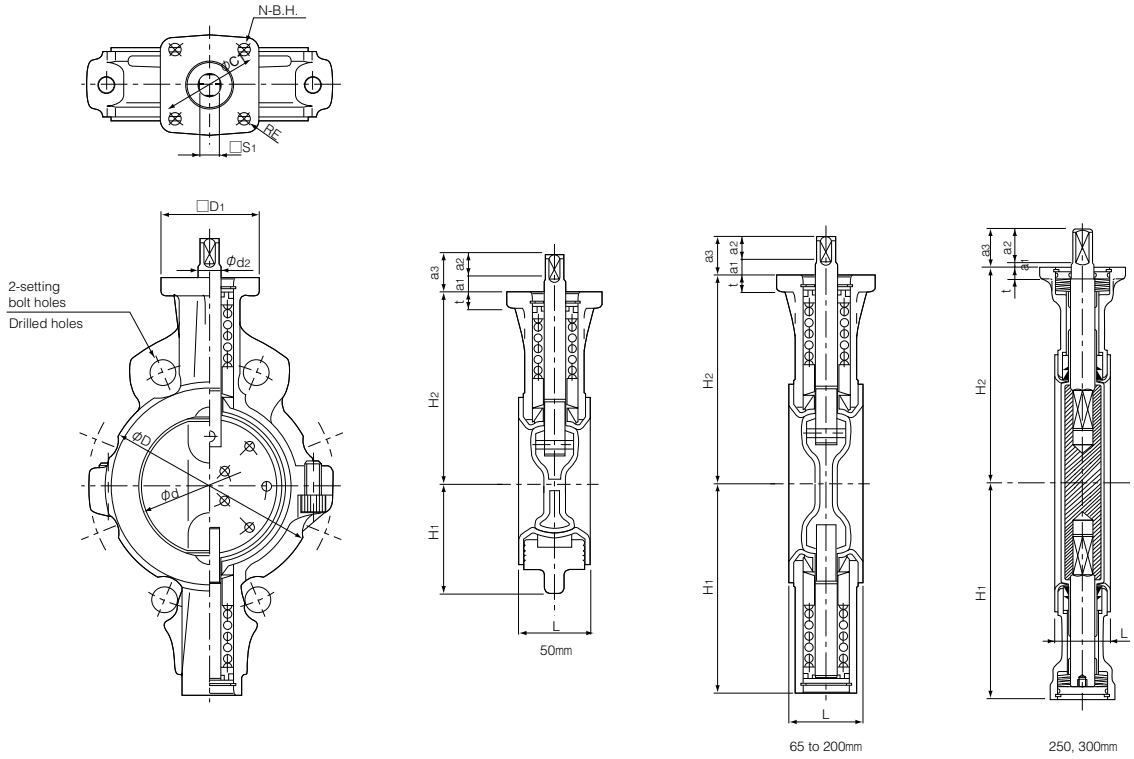

■Dimensions

Nominal size		Dimension (mm)																Approx. Mass (kg)
mm	inch	φd	φD	L	H_1	H_2	d_2	a_1	a_2	a_3	S_1	D_1	t	RE	$φC_1$	N	B.H.	
50	2	53.4	96	43	62	118.5	14	11	12	23	12	70	12	10	70	4	9	2.2
65	2 1/2	67	115	46	125	125	14	11	12	23	12	70	12	10	70	4	9	3.3
80	3	82	131	46	132.5	132.5	14	11	12	23	12	70	12	10	70	4	9	3.6
100	4	102	152	52	148	148	16	11	17	28	14	70	12	10	70	4	9	5
125	5	127.6	190	56	171	171	18	11	17	28	14	102	14	23.5	102	4	11	8.5
150	6	151.6	217	56	183	183	18	11	17	28	14	102	14	23.5	102	4	11	10.1
200	8	197	266	60	220	220	22	10	21	31	18	102	14	23.5	102	4	11	14.6
250	10	247.5	320	68	260	260	28	5	30	35	24	102	14	24	102	4	11	28
300	12	296.4	374	78	297	297	30	5	30	35	24	125	16	32	125	4	13	38

847Q Lugged type

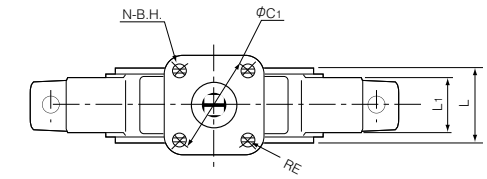

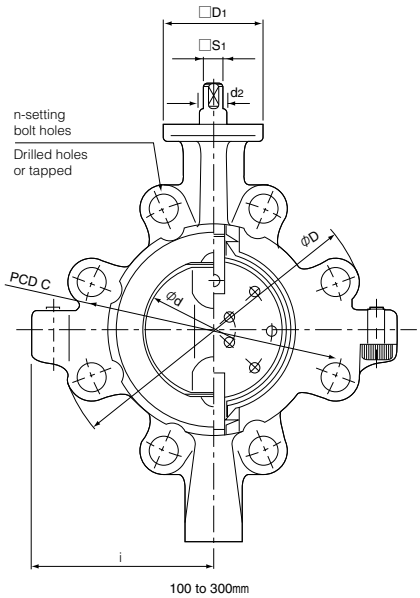

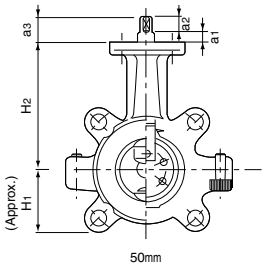

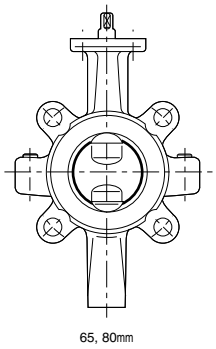

■Dimensions

Nominal size		Dimension (mm)																		Approx. Mass (kg)
mm	inch	ϕd	ϕD	L	L_1	H_1	H_2	i	d_2	a_1	a_2	a_3	S_1	D_1	t	RE	ϕC_1	N	B.H.	
50	2	150.6	53.4	43	32	58	118.5	80	14	11	12	23	12	70	12	10	70	4	9	3.3
65	2 1/2	175	67	46	34	125	125	86	14	11	12	23	12	70	12	10	70	4	9	4.4
80	3	184	82	46	34	132.5	132.5	90	14	11	12	23	12	70	12	10	70	4	9	4.7
100	4	223	102	52	40	148	148	130	16	11	17	28	14	70	12	10	70	4	9	8.6
125	5	252	127.6	56	43	171	171	150	18	11	17	28	14	102	14	23.5	102	4	11	12.6
150	6	276	151.6	56	44	183	183	163	18	11	17	28	14	102	14	23.5	102	4	11	13.3
200	8	331	197	60	50	220	220	180	22	10	21	31	18	102	14	23.5	102	4	11	21.3
250	10	406	247.5	68	52	260	260	242	28	5	30	35	24	102	14	24	102	4	11	37
300	12	476	296.4	78	66	297	297	270.5	30	5	30	35	24	125	16	32	125	4	13	54

Lock lever type 847T-1T(50mm to 200mm) / 846T-1T(65mm to 200mm)

■847T-1T

Nominal size		Dimension (mm)							Lever type	Approx. Mass (kg)
mm	inch	φd	φD	L	H_1	H_2	H_3	W		
50	2	53.4	96	43	62	118.5	66	200	1T-1	2.8
65	2 1/2	67	115	46	125	125	66	200	1T-1	3.9
80	3	82	131	46	132.5	132.5	66	200	1T-1	4.2
100	4	102	152	52	148	148	66	200	1T-1	5.6
125	5	127.6	190	56	171	171	92	300	1T-2	9.8
150	6	151.6	217	56	183	183	92	300	1T-2	11.4
200	8	197	266	60	220	220	97	350	1T-3	16.3

■846T-1T

Nominal size		Dimension (mm)							Lever type	Approx. Mass (kg)
mm	inch	φd	φD	L	H_1	H_2	H_3	W		
65	2 1/2	67	115	46	125	125	66	200	1T-1	3.9
80	3	82	131	46	132.5	132.5	66	200	1T-1	4.3
100	4	102	152	52	148	148	66	200	1T-1	5.7
125	5	127.6	190	56	171	171	92	300	1T-2	9.8
150	6	151.6	217	56	183	183	92	300	1T-2	11.4
200	8	197	266	60	220	220	97	350	1T-3	16

■846T/847T-1T

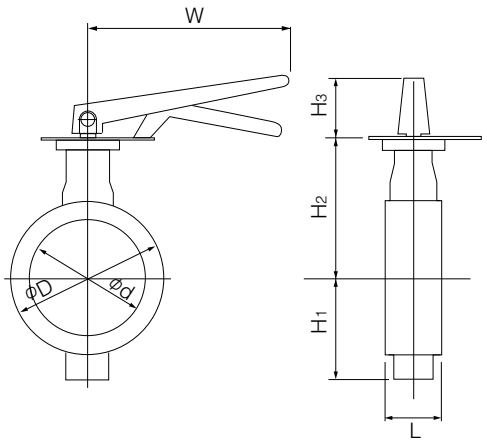

Worm gear type 847T-2U(50mm to 300mm) / 846T-2U(65mm to 300mm)

■847T-2U

Nominal size		Dimension (mm)										Gear type	Approx. Mass (kg)
mm	inch	φd	φD	L	H_1	H_2	H_3	E	K	F	W		
50	2	53.4	96	43	62	118.5	29.5	36	46	160	100	2U-1	4.5
65	2 1/2	67	115	46	125	125	29.5	36	46	160	100	2U-1	5.6
80	3	82	131	46	132.5	132.5	29.5	36	46	160	100	2U-1	5.9
100	4	102	152	52	148	148	34.5	44	53	173.5	160	2U-2	9.2
125	5	127.6	190	56	171	171	34.5	44	53	173.5	160	2U-2	12.7
150	6	151.6	217	56	183	183	34.5	44	53	173.5	160	2U-2	14.3
200	8	197	266	60	220	220	41.5	67	75	198	200	2U-3	22.2
250	10	247.5	320	68	260	260	41.5	67	75	198	200	2U-3	36
300	12	296.4	374	78	297	297	48	87.5	90	222.5	200	2U-4	52

■846T-2U

Nominal size		Dimension (mm)										Gear type	Approx. Mass (kg)
mm	inch	φd	φD	L	H_1	H_2	H_3	E	K	F	W		
65	2 1/2	67	115	46	125	125	29.5	36	46	160	100	2U-1	5.6
80	3	82	131	46	132.5	132.5	29.5	36	46	160	100	2U-1	6
100	4	102	152	52	148	148	34.5	44	53	173.5	160	2U-2	9.3
125	5	127.6	190	56	171	171	34.5	44	53	173.5	160	2U-2	12.7
150	6	151.6	217	56	183	183	34.5	44	53	173.5	160	2U-2	14.3
200	8	197	266	60	220	220	41.5	67	75	198	200	2U-3	21.9
250	10	247.5	320	68	260	260	41.5	67	75	198	200	2U-3	36
300	12	296.4	374	78	297	297	48	87.5	90	222.5	200	2U-4	52

■846T/847T-2U

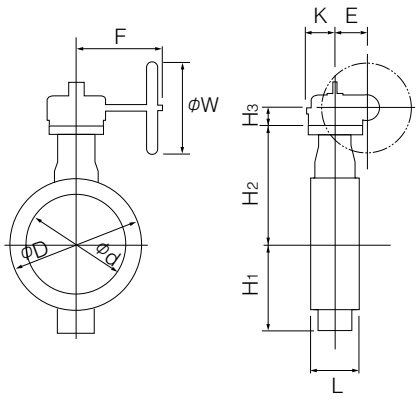

■2U Installation direction

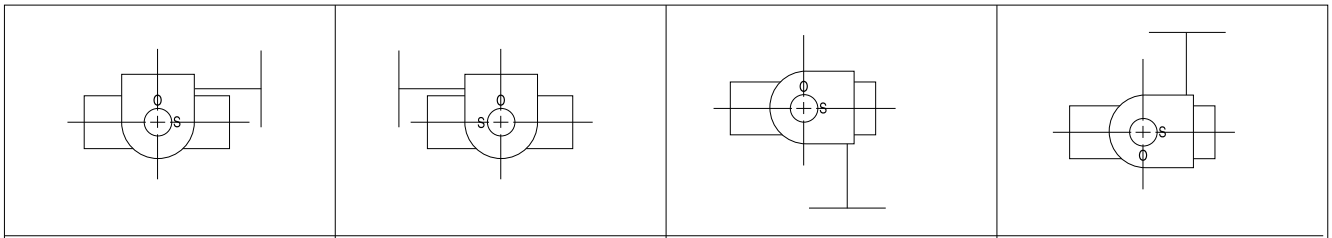

2UA (standard)	2UAR	2UB	2UBR

Double-acting pneumatic cylinder type 847T-7E(50mm to 300mm)

■847T-7E Standard

Nominal size		Dimension (mm)										Cylinder type	Approx. Mass (kg)
mm	inch	φd	φD	L	H1	H2	H3	A	P	f1	f2		
50	2	53.4	96	43	62	118.5	168	276	142	75	47	T85	8
65	2 1/2	67	115	46	125	125	168	276	142	75	47	T85	9
80	3	82	131	46	132.5	132.5	168	276	142	75	47	T85	9
100	4	102	152	52	148	148	203	346	176	79	57	T200	14
125	5	127.6	190	56	171	171	203	346	176	79	57	T200	17
150	6	151.6	217	56	183	183	203	346	176	79	57	T200	19
200	8	197	266	60	220	220	231	423	214	91	69	T380	30
250	10	247.5	320	68	260	260	269	546	270	118	85	T750	52
300	12	296.4	374	78	297	297	269	546	270	118	85	T750	62

■847T-7E, 3A Heavy duty

Nominal size		Dimension (mm)										Cylinder type	Approx. Mass (kg)
mm	inch	φd	φD	L	H1	H2	H3	A	P	f1	f2		
50	2	53.4	96	43	62	118.5	168	276	142	75	47	T85	8
65	2 1/2	67	115	46	125	125	168	276	142	75	47	T85	9
80	3	82	131	46	132.5	132.5	168	276	142	75	47	T85	9
100	4	102	152	52	148	148	203	346	176	79	57	T200	14
125	5	127.6	190	56	171	171	203	346	176	79	57	T200	17
150	6	151.6	217	56	183	183	231	423	214	91	69	T380	25
200	8	197	266	60	220	220	231	423	214	91	69	T380	30
250	10	247.5	320	68	260	260	269	546	270	118	85	T750	52
300	12	296.4	374	78	297	297	269	754	373	167	100	TGA-125	81

■847T-7E, 3A High Temperature Specification(For fluids over 100 degrees C)

Nominal size		Dimension (mm)										Cylinder type	Approx. Mass (kg)
mm	inch	φd	φD	L	H1	H2	H3	A	P	f1	f2		
50	2	53.4	96	43	62	118.5	243	276	142	75	47	T85	8
65	2 1/2	67	115	46	125	125	243	276	142	75	47	T85	9
80	3	82	131	46	132.5	132.5	243	276	142	75	47	T85	9
100	4	102	152	52	148	148	278	346	176	79	57	T200	14
125	5	127.6	190	56	171	171	278	346	176	79	57	T200	17
150	6	151.6	217	56	183	183	306	423	214	91	69	T380	25
200	8	197	266	60	220	220	331	423	214	91	69	T380	30
250	10	247.5	320	68	260	260	369	546	270	118	85	T750	52
300	12	296.4	374	78	297	297	359	754	373	167	100	TGA-125	81

■7E,3A Installation direction

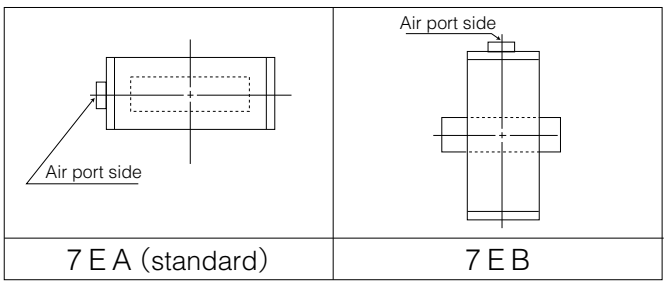

7 E A (standard)	7 E B

Selection criteria		
	Standard	Select when none of the following heavy duty items apply.
	Heavy duty	Select when any of the following items apply. ①Working temperature is over 60 degrees C ②Powder or high viscosity fluids (consult us) ③Velocity more than 3 m/s ④Throttling ⑤Slow travelling time of valve: more than 30 sec. ⑥Dead end, pump outlet, emergency open

Double-acting pneumatic cylinder type 846T-7E / 3A (65mm to 300mm)

■846T-7E Standard

Nominal size		Dimension (mm)										Cylinder type	Approx. Mass (kg)
mm	inch	φd	φD	L	H1	H2	H3	A	P	f1	f2		
65	2 1/2	67	115	46	125	125	168	276	142	75	47	T85	9
80	3	82	131	46	132.5	132.5	168	276	142	75	47	T85	9
100	4	102	152	52	148	148	203	346	176	79	57	T200	14
125	5	127.6	190	56	171	171	203	346	176	79	57	T200	17
150	6	151.6	217	56	183	183	203	346	176	79	57	T200	19
200	8	197	266	60	220	220	231	423	214	91	69	T380	29
250	10	247.5	320	68	260	260	269	546	270	118	85	T750	52
300	12	296.4	374	78	297	297	269	546	270	118	85	T750	62

■846T-7E/3A Heavy duty

Nominal size		Dimension (mm)										Cylinder type	Approx. Mass (kg)
mm	inch	φd	φD	L	H1	H2	H3	A	P	f1	f2		
65	2 1/2	67	115	46	125	125	168	276	142	75	47	T85	9
80	3	82	131	46	132.5	132.5	168	276	142	75	47	T85	9
100	4	102	152	52	148	148	203	346	176	79	57	T200	14
125	5	127.6	190	56	171	171	203	346	176	79	57	T200	17
150	6	151.6	217	56	183	183	231	423	214	91	69	T380	23
200	8	197	266	60	220	220	231	423	214	91	69	T380	29
250	10	247.5	320	68	260	260	269	546	270	118	85	T750	52
300	12	296.4	374	78	297	297	359	754	373	167	100	TGA-125	81

■846T-7E/3A High Temperature Specification (For fluids over 100 degrees C)

Nominal size		Dimension (mm)										Cylinder type	Approx. Mass (kg)
mm	inch	φd	φD	L	H1	H2	H3	A	P	f1	f2		
65	2 1/2	67	115	46	125	125	243	276	142	75	47	T85	9
80	3	82	131	46	132.5	132.5	243	276	142	75	47	T85	9
100	4	102	152	52	148	148	278	346	176	79	57	T200	14
125	5	127.6	190	56	171	171	278	346	176	79	57	T200	17
150	6	151.6	217	56	183	183	306	423	214	81	69	T380	23
200	8	197	266	60	220	220	331	423	214	81	69	T380	29
250	10	247.5	320	68	260	260	369	546	270	118	85	T750	52
300	12	296.4	374	78	297	297	369	754	373	167	100	TGA-125	81

Selection criteria		
	Standard	Select when none of the following heavy duty items apply.
	Heavy duty	Select when any of the following items apply. ①Working temperature is over 60 degrees C ②Powder or high viscosity fluids (consult us) ③Velocity more than 3 m/s ④Throttling ⑤Slow travelling time of valve: more than 30 sec. ⑥Dead end, pump outlet, emergency open

■846T/847T-7E/3A

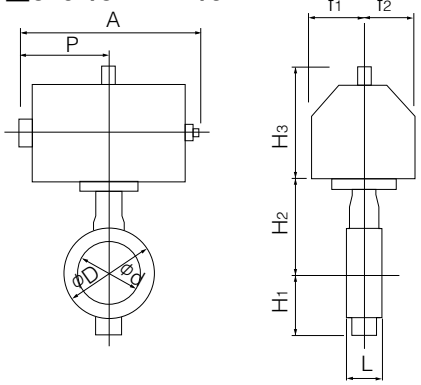

■Caution for actuator mounting

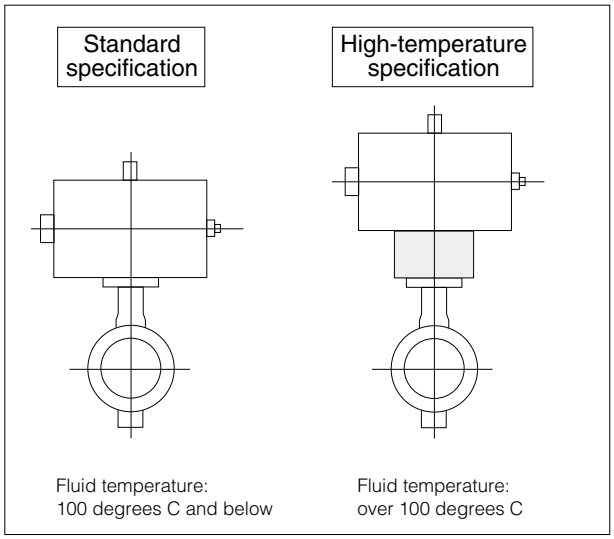

Single-acting pneumatic cylinder type 847T-7G (Air to open: 50mm to 200mm) / 847T-7F (Air to close: 50mm to 200mm)

■847T-7G/7F Standard

Nominal size		Dimension (mm)										Cylinder type	Approx. Mass (kg)
mm	inch	φd	φD	L	H_1	H_2	H_3	A	P	f_1	f_2		
50	2	53.4	96	43	62	118.5	203	449	226	79	57	T200S	13
65	2 1/2	67	115	46	125	125	203	449	226	79	57	T200S	14
80	3	82	131	46	132.5	132.5	203	449	226	79	57	T200S	15
100	4	102	152	52	148	148	231	550	276	91	69	T380S	24
125	5	127.6	190	56	171	171	231	550	276	91	69	T380S	28
150	6	151.6	217	56	183	183	269	723	360	118	85	T750S	43
200	8	197	266	60	220	220	269	723	360	118	85	T750S	47

■847T-7G/7F Heavy duty

Nominal size		Dimension (mm)										Cylinder type	Approx. Mass (kg)
mm	inch	φd	φD	L	H_1	H_2	H_3	A	P	f_1	f_2		
50	2	53.4	96	43	62	118.5	203	449	226	79	57	T200S	13
65	2 1/2	67	115	46	125	125	203	449	226	79	57	T200S	14
80	3	82	131	46	132.5	132.5	231	550	276	91	69	T380S	23
100	4	102	152	52	148	148	231	550	276	91	69	T380S	24
125	5	127.6	190	56	171	171	269	723	360	118	85	T750S	41
150	6	151.6	217	56	183	183	269	723	360	118	85	T750S	43

■847T-7G/7F High Temperature Specification (For fluids over 100 degrees C)

Nominal size		Dimension (mm)										Cylinder type	Approx. Mass (kg)
mm	inch	φd	φD	L	H_1	H_2	H_3	A	P	f_1	f_2		
50	2	53.4	96	43	62	118.5	278	449	226	79	57	T200S	13
65	2 1/2	67	115	46	125	125	278	449	226	79	57	T200S	16
80	3	82	131	46	132.5	132.5	306	550	276	91	69	T380S	24
100	4	102	152	52	148	148	306	550	276	91	69	T380S	26
125	5	127.6	190	56	171	171	344	723	360	118	85	T750S	45
150	6	151.6	217	56	183	183	344	723	360	118	85	T750S	46

Selection criteria		
	Standard	Select when none of the following heavy duty items apply.
	Heavy duty	Select when any of the following items apply. ①Working temperature is over 60 degrees C ②Powder or high viscosity fluids (consult us) ③Velocity more than 3 m/s ④Throttling ⑤Slow travelling time of valve: more than 30 sec. ⑥Dead end, pump outlet, emergency open

■846T-7G/7F Heavy Duty

Nominal size		Dimension (mm)										Cylinder type	Approx. Weight (kg)
mm	inch	φd	φD	L	H1	H2	H3	A	P	f1	f2		
65	2 1/2	67	115	46	125	125	203	449	226	79	57	T200S	14
80	3	82	131	46	132.5	132.5	203	449	226	79	57	T200S	15
100	4	102	152	52	148	148	231	550	276	91	69	T380S	24
125	5	127.6	190	56	171	171	231	550	276	91	69	T380S	28
150	6	151.6	217	56	183	183	269	723	360	118	85	T750S	43
200	8	197	266	60	220	220	269	723	360	118	85	T750S	47

■846T-7G/7F Heavy Duty

Nominal size		Dimension (mm)										Cylinder type	Approx. Weight (kg)
mm	inch	φd	φD	L	H1	H2	H3	A	P	f1	f2		
65	2 1/2	67	115	46	125	125	203	449	226	79	57	T200S	14
80	3	82	131	46	132.5	132.5	231	550	276	91	69	T380S	23
100	4	102	152	52	148	148	231	550	276	91	69	T380S	24
125	5	127.6	190	56	171	171	269	723	360	118	85	T750S	41
150	6	151.6	217	56	183	183	269	723	360	118	85	T750S	43

■846T-7G/7F High Temperature Specification(SCS14 Disc: For fluids over 100 degrees C)

Nominal size		Dimension (mm)										Cylinder type	Approx. Weight (kg)
mm	inch	φd	φD	L	H1	H2	H3	A	P	f1	f2		
65	2 1/2	67	115	46	125	125	278	449	226	79	57	T200S	16
80	3	82	131	46	132.5	132.5	306	550	276	91	69	T380S	24
100	4	102	152	52	148	148	306	550	276	91	69	T380S	26
125	5	127.6	190	56	171	171	344	723	360	118	85	T750S	45
150	6	151.6	217	56	183	183	344	723	360	118	85	T750S	46

■846T/847T-7F/7G

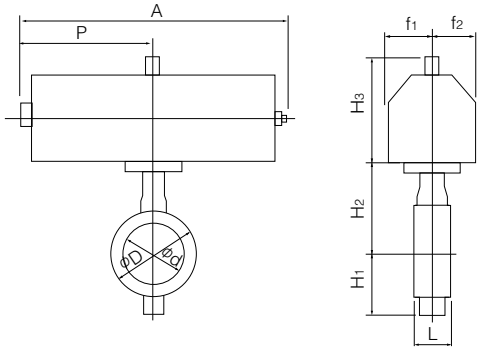

Selection criteria		
	Standard	Select when none of the following heavy duty items apply.
	Heavy duty	Select when any of the following items apply. ①Working temperature is over 60 degrees C ②Powder or high viscosity fluids (consult us) ③Velocity more than 3 m/s ④Throttling ⑤Slow travelling time of valve: more than 30 sec. ⑥Dead end, pump outlet, emergency open

■7F/7G Installation Direction

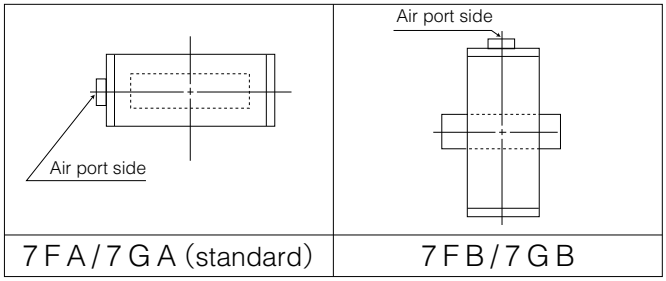

7FA/7GA (standard)	7FB/7GB

■Caution for Actuator Mounting

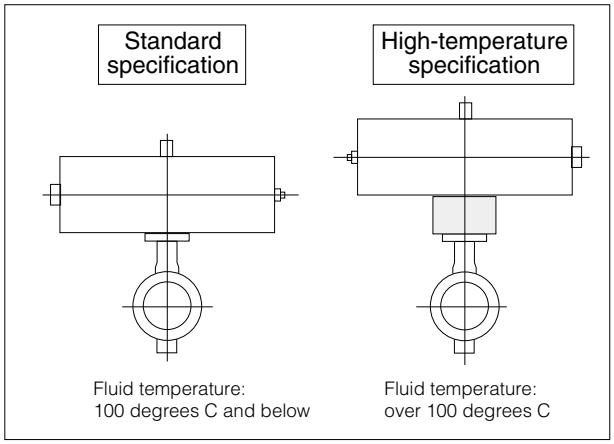

Single-acting Pneumatic Cylinder Type 847T-3U(Air to open: 200mm to 300mm) / 847T-3K(Air to close: 200mm to 300mm)
846T-3U(Air to open: 200mm to 300mm) / 846T-3K(Air to close: 200mm to 300mm)

■847T-3U/3K Standard

Nominal size		Dimension (mm)										Cylinder type	Approx. Weight (kg)
mm	inch	φd	φD	L	H_1	H_2	H_3	A	P	f_1	f_2		
250	10	247.5	320	68	260	260	307	1080	720	94	206	TG-12S	123
300	12	296.4	374	78	297	297	307	1080	720	94	206	TG-12S	133

■847T-3U/3K Heavy Duty

Nominal size		Dimension (mm)										Cylinder type	Approx. Weight (kg)
mm	inch	φd	φD	L	H_1	H_2	H_3	A	P	f_1	f_2		
200	8	197	266	60	220	220	307	945	585	75	165	TG-10S	66
250	10	247.5	320	68	260	260	340	1255	865	131	257	TG-14S	219
300	12	296.4	374	78	297	297	340	1255	865	131	257	TG-14S	229

■846T-3U/3K Standard

Nominal size		Dimension (mm)										Cylinder type	Approx. Weight (kg)
mm	inch	φd	φD	L	H_1	H_2	H_3	A	P	f_1	f_2		
250	10	247.5	320	68	260	260	307	1080	720	94	206	TG-12S	122
300	12	296.4	374	78	297	297	307	1080	720	94	206	TG-12S	132

■846T-3U/3K Heavy Duty

Nominal size		Dimension (mm)										Cylinder type	Approx. Weight (kg)
mm	inch	φd	φD	L	H_1	H_2	H_3	A	P	f_1	f_2		
200	8	197	266	60	220	220	307	945	585	70	165	TG-10S	66
250	10	247.5	320	68	260	260	340	1255	865	131	257	TG-14S	218
300	12	296.4	374	78	297	297	340	1255	865	131	257	TG-14S	228

Selection criteria		
	Standard	Select when none of the following heavy duty items apply.
	Heavy duty	Select when any of the following items apply. ①Working temperature is over 60 degrees C ②Powder or high viscosity fluids (consult us) ③Velocity more than 3 m/s ④Throttling ⑤Slow travelling time of valve: more than 30 sec. ⑥Dead end, pump outlet, emergency open

■846T/847T-3U

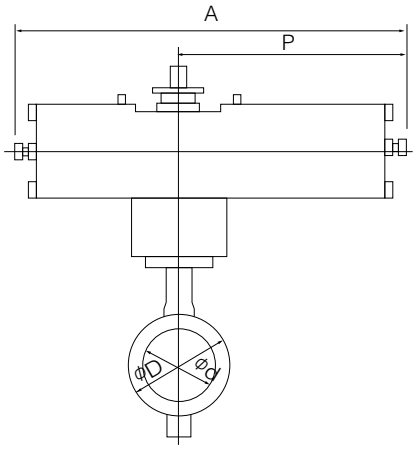

■846T/847T-3K

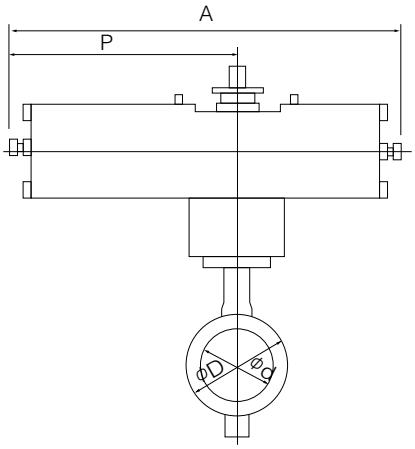

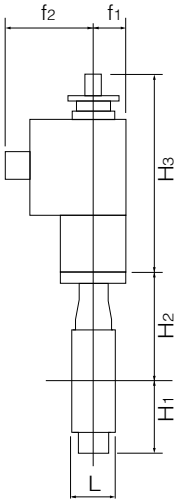

■3U Installation direction

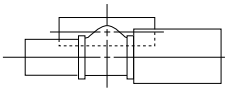	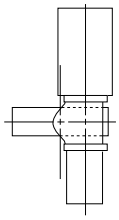
3UA (standard)	3UB

■3K Installation direction

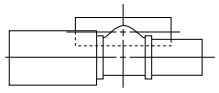	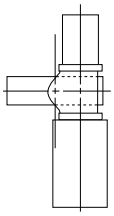
3KA (standard)	3KB

Single phase electric motor type 847T-4I(50mm to 300mm) / 846T-4I(65mm to 300mm)

■847T-4I

Nominal size		Dimension (mm)										Motor type	Approx. Mass (kg)
mm	inch	φd	φD	L	H1	H2	H3	A	P	F	K		
50	2	53.4	96	43	62	118.5	150	202	100	85	54	4 I-0	6.4
65	2 1/2	67	115	46	125	125	150	202	100	85	54	4 I-0	7.5
80	3	82	131	46	132.5	132.5	165	252	138	126	65	4 I-1	10
100	4	102	152	52	148	148	165	252	138	126	65	4 I-1	11.4
125	5	127.6	190	56	171	171	198	310	167	154	85	4 I-2	20.3
150	6	151.6	217	56	183	183	198	310	167	154	85	4 I-2	22
200	8	197	266	60	220	220	198	310	167	154	85	4 I-2.5	27
250	10	247.5	320	68	260	260	230	388	223	246	136	4 I-3	52
300	12	296.4	374	78	297	297	230	388	223	246	136	4 I-3	62

■847T-4I High temperature specification(SCS14 Disc: For fluids over 100 degrees C)

Nominal size		Dimension (mm)										Motor type	Approx. Mass (kg)
mm	inch	φd	φD	L	H1	H2	H3	A	P	F	K		
50	2	53.4	96	43	62	118.5	225	202	100	85	54	4 I-0	7.5
65	2 1/2	67	115	46	125	125	225	202	100	85	54	4 I-0	8.6
80	3	82	131	46	132.5	132.5	240	252	138	126	65	4 I-1	11.1
100	4	102	152	52	148	148	240	252	138	126	65	4 I-1	12.7
125	5	127.6	190	56	171	171	273	310	167	154	85	4 I-2	21.5
150	6	151.6	217	56	183	183	273	310	167	154	85	4 I-2	23.1
200	8	197	266	60	220	220	273	310	167	154	85	4 I-2.5	29.2
250	10	247.5	320	68	260	260	305	388	223	246	136	4 I-3	54
300	12	296.4	374	78	297	297	305	388	223	246	136	4 I-3	64

■846T-4I

Nominal size		Dimension (mm)										Motor type	Approx. Mass (kg)
mm	inch	φd	φD	L	H1	H2	H3	A	P	F	K		
65	2 1/2	67	115	46	125	125	150	202	100	85	54	4 I-0	7.5
80	3	82	131	46	132.5	132.5	165	252	138	126	65	4 I-1	10.1
100	4	102	152	52	148	148	165	252	138	126	65	4 I-1	11.5
125	5	127.6	190	56	171	171	198	310	167	154	85	4 I-2	20.3
150	6	151.6	217	56	183	183	198	310	167	154	85	4 I-2	22
200	8	197	266	60	220	220	198	310	167	154	85	4 I-2.5	27.6
250	10	248	338	90	221	250	233	388	223	246	136	4 I-3	55
300	12	295	382	90	261	280	233	388	223	246	136	4 I-3	63

■846T-4I High temperature specification(SCS14 Disc: For fluids over 100 degrees C)

Nominal size		Dimension (mm)										Motor type	Approx. Mass (kg)
mm	inch	φd	φD	L	H1	H2	H3	A	P	F	K		
65	2 1/2	67	115	46	125	125	225	202	100	85	54	4 I-0	8.6
80	3	82	131	46	132.5	132.5	240	252	138	126	65	4 I-1	11.2
100	4	102	152	52	148	148	240	252	138	126	65	4 I-1	12.8
125	5	127.6	190	56	171	171	273	310	167	154	85	4 I-2	21.5
150	6	151.6	217	56	183	183	273	310	167	154	85	4 I-2	23.1
200	8	197	266	60	220	220	273	310	167	154	85	4 I-2.5	28.9
250	10	247.5	320	68	260	260	305	388	223	246	136	4 I-3	54
300	12	296.4	374	78	297	297	305	388	223	246	136	4 I-3	64

■846T/847T-4 I

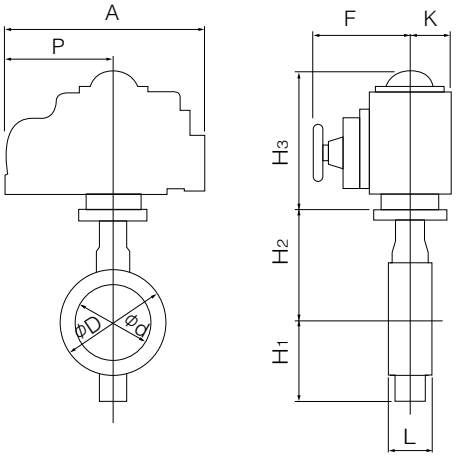

■Caution for actuator mounting

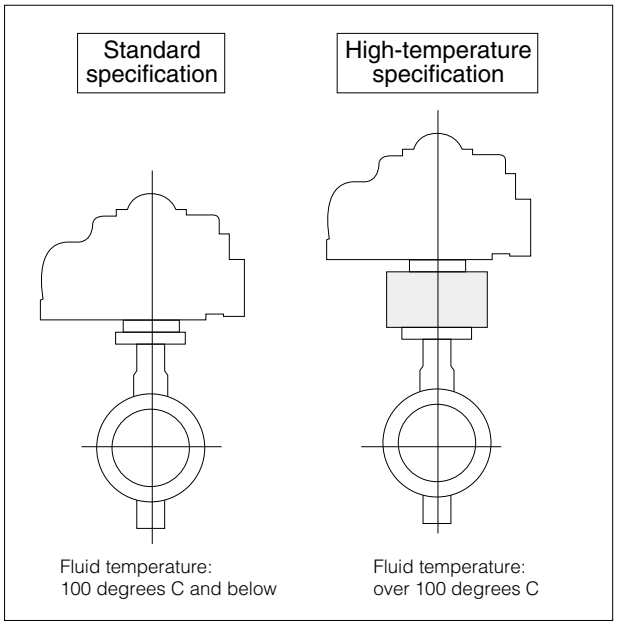

■4I Installation direction

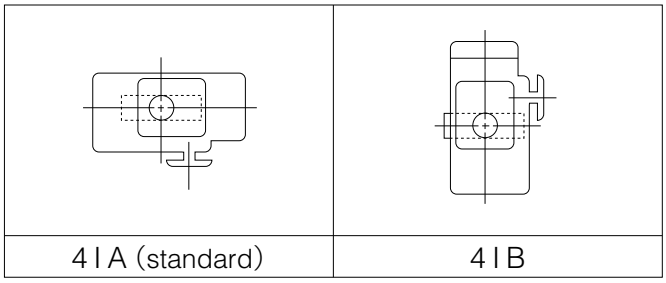

4 I A (standard)	4 I B

846T Cv value/pressure loss coefficient

●Cv value

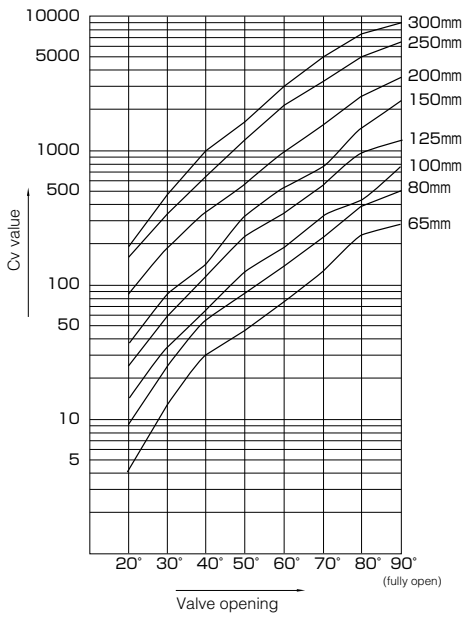

●Pressure loss coefficient

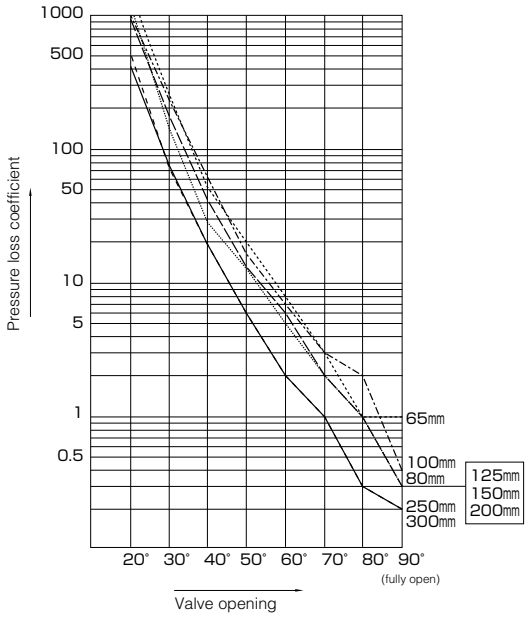

846T Cv value

Nominal size		Valve opening							
mm	inch	20°	30°	40°	50°	60°	70°	80°	90°
65	2 1/2	5	13	30	48	74	129	220	293
80	3	9	25	56	85	130	225	396	500
100	4	16	33	65	125	198	311	405	772
125	5	26	59	122	211	338	555	951	1295
150	6	37	77	145	303	507	767	1400	2166
200	8	83	178	355	592	906	1557	2573	3248
250	10	130	351	675	1225	2125	3375	5091	6200
300	12	194	487	972	1764	3011	4966	7412	8900

846T Pressure loss coefficient

Nominal size		Valve opening							
mm	inch	20°	30°	40°	50°	60°	70°	80°	90°
65	2 1/2	1829	270	51	20	8	3	1	1
80	3	1136	147	29	13	5	2	1	0.3
100	4	1015	239	62	17	7	3	2	0.4
125	5	931	181	42	14	6	2	1	0.3
150	6	901	208	59	13	5	2	1	0.2
200	8	548	119	30	11	5	2	1	0.3
250	10	528	72	20	6	2	1	0.3	0.2
300	12	488	78	20	6	2	1	0.3	0.2

847T Cv value/pressure loss coefficient

●Cv value

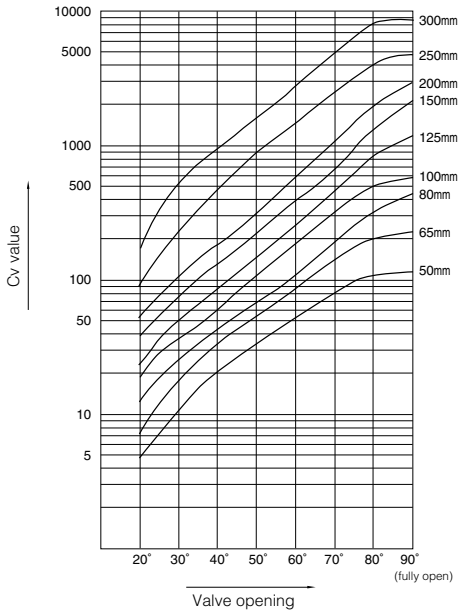

●Pressure loss coefficient

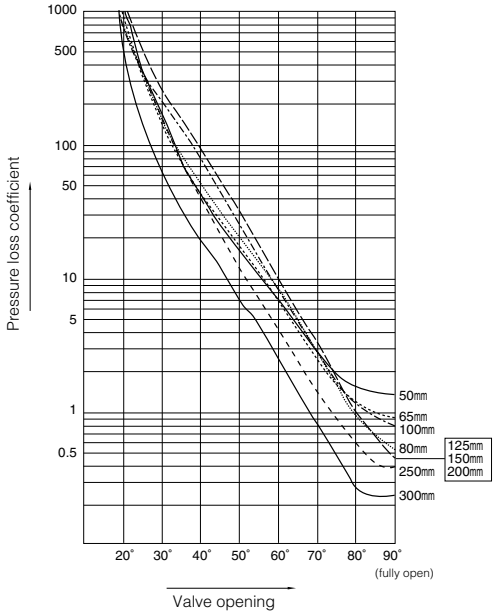

847T Cv value

Nominal size		Valve opening							
mm	inch	20°	30°	40°	50°	60°	70°	80°	90°
50	2	5	10	20	32	50	78	107	114
65	2 1/2	7	18	33	51	83	140	202	229
80	3	12	25	43	67	106	184	318	428
100	4	19	35	58	103	178	309	493	585
125	5	23	49	83	141	250	441	808	1170
150	6	38	75	127	218	383	621	1260	2080
200	8	52	105	177	305	547	995	1890	2910
250	10	75	210	415	745	1250	2200	3520	4270
300	12	140	475	850	1420	2400	4190	6780	7780

847T Pressure loss coefficient

Nominal size		Valve opening							
mm	inch	20°	30°	40°	50°	60°	70°	80°	90°
50	2	675	169	42	16	7	3	1	1
65	2 1/2	933	141	42	18	7	2	1	1
80	3	639	147	50	21	8	3	1	1
100	4	720	212	77	24	8	3	1	1
125	5	1190	262	91	32	10	3	1	0.4
150	6	855	219	77	26	8	3	1	0.3
200	8	1396	342	121	41	13	4	1	0.4
250	10	1485	189	49	15	5	2	1	0.5
300	12	860	75	23	8	3	1	0.4	0.3

847T/846T Applicable pipe list in case of A

■847T

Nominal size		SGP	Sch20	Sch40	VP (TS flange)	Sch10S	Sch20S	Minimum internal diameter of piping (mm)
mm	inch							
50	2	○	○	○	○	○	○	34
65	2 1/2	○	○	○	○	○	○	51
80	3	○	○	○	○	○	○	70
100	4	○	○	○	○	○	○	91
125	5	○	○	○	○	○	○	118
150	6	○	○	○	○	○	○	144
200	8	○	○	○	○	○	○	194
250	10	○	○	○	○	○	○	246
300	12	○	○	○	○	○	○	294

■846T

Nominal size		SGP	Sch20	Sch40	VP (TS flange)	Sch10S	Sch20S	Minimum internal diameter of piping (mm)
mm	inch							
65	2 1/2	○	○	○	○	○	○	51
80	3	○	○	○	○	○	○	70
100	4	○	○	○	○	○	○	91
125	5	○	○	○	○	○	○	118
150	6	○	○	○	○	○	○	144
200	8	○	○	○	○	○	○	194
250	10	○	○	○	○	○	○	246
300	12	○	○	○	○	○	○	294

847T/846T Applicable pipe list in case of B

■847T

Nominal size		SGP	Sch20	Sch40	Sch10S	Sch20S
mm	inch					
50	2	○	○	○	○	○
65	2 1/2	○	○	○	○	○
80	3	○	○	○	○	○
100	4	○	○	○	○	○
125	5	○	○	○	○	○
150	6	○	○	○	○	○
200	8	○	○	○	○	○
250	10	○	○	○	○	○
300	12	○	○	○	○	○

■846T

Nominal size		SGP	Sch20	Sch40	Sch10S	Sch20S
mm	inch					
65	2 1/2	○	○	○	○	○
80	3	○	○	○	○	○
100	4	○	○	○	○	○
125	5	○	○	○	○	○
150	6	○	○	○	○	○
200	8	○	○	○	○	○
250	10	○	○	○	○	○
300	12	○	○	○	○	○

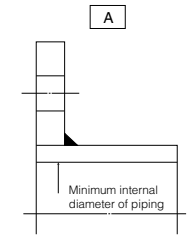

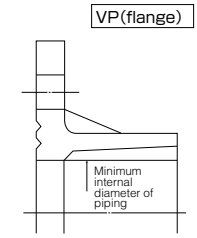

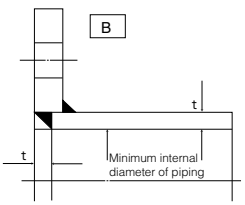

Remark 1: ○=Applicable
Remark 2: Butterfly valves are inserted into a pipe that was fitted with the disc when fully open.
In cases where you are using a pipe or flange that is less than the minimum inner pipe diameter, use is still possible if means are taken such as inserting a spacer between the valve and flange.
For details, please consult us.

847T Applicable flange standard

Nominal size		JIS		ANSI		BS4504	DIN	BS10
mm	inch	5K	10K	125Lb	150Lb	PN10	NP10	Table E
50	2	○	○	○	○	○	○	○
65	2 1/2	○	○	○	○	○	○	○
80	3	D	D	D	D	D	D	D
100	4	D	D	D	D	D	D	D
125	5	D	D	D	D	D	D	D
150	6	D	D	D	D	D	D	D
200	8	D	D	D	D	D	D	D
250	10	D	D	D	D	D	D	D
300	12	D	D	D	D	D	D	D

○ : Can be used without flange drilling
D : With flange drilling

846T Applicable flange standard

Nominal size		JIS		ANSI		BS4504	DIN	BS10
mm	inch	5K	10K	125Lb	150Lb	PN10	NP10	Table E
65	2 1/2	○	○	○	○	○	○	○
80	3	D	D	D	D	D	D	D
100	4	D	D	D	D	D	D	D
125	5	D	D	D	D	D	D	D
150	6	D	D	D	D	D	D	D
200	8	D	D	D	D	D	D	D
250	10	D	D	D	D	D	D	D
300	12	D	D	D	D	D	D	D

○ : Can be used without flange drilling
D : With flange drilling

847T/ 846T Piping bolt and nut sizes

■Piping bolts sizes

Nominal size		JIS 5K	JIS 10K	ANSI 125Lb/150Lb	DIN NP10, BS4504 PN10
mm	inch	Hexagon bolts and nuts	Hexagon bolts and nuts	Long bolts and nuts	Long bolts and nuts
50	2	4-M12× 90×30	4-M16×105×40	4-5/8-11UNC×145×45	4-M16×125×30
65	2 1/2	4-M12× 90×30	4-M16×105×40	4-5/8-11UNC×155×50	4-M16×125×30
80	3	4-M16×105×40	8-M16×110×40	4-5/8-11UNC×155×50	8-M16×130×30
100	4	8-M16×110×40	8-M16×110×40	8-5/8-11UNC×165×50	8-M16×140×35
125	5	8-M16×110×40	8-M20×120×50	8-3/4-10UNC×175×55	8-M16×140×35
150	6	8-M16×120×40	8-M20×130×50	8-3/4-10UNC×175×55	8-M20×155×40
200	8	8-M20×130×50	12-M20×135×50	8-3/4-10UNC×175×55	8-M20×160×40
250	10	12-M20×135×50	12-M22×150×60	12-7/8- 9UNC×215×55	12-M20×175×40
300	12	12-M20×150×50	16-M22×160×60	12-7/8- 9UNC×215×55	12-M20×185×40

●The bolt lengths fit the JIS or steel flanges.
Remark: ※ Use thin hexagon nuts for hexagon bolts.(Except for ANSI : nuts for ANSI is heavy nut)
※ Material: Consult us when other than SS400 (Mild steel)

Example

Long bolts: 12 - M22 × 185 × 45
N M L S

Hexagon bolts: 4 - M30 × 95 × 65
N M L S

Long bolts and nuts (full thread)

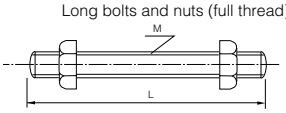

Hexagon bolts and nuts

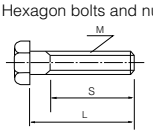

841T Wafer

842T Wafer



Valve nominal size

841T 350 to 600mm

842T 350 to 600mm

Max.Working pressure MPa

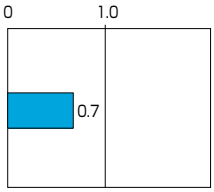

Working temperature range degrees C

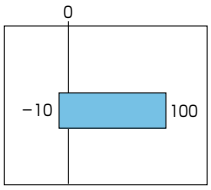

CE CE Marking (842T)



Features and Benefits

Bubble tight seal and no leakage

PTFE does not react to most of the chemicals used in modern chemical processing – even at high temperatures and high pressures. It is recognised as an ideal material for industrial valves that handle highly corrosive fluids. PTFE has a low friction coefficient and excellent lubricity when used in contact with metal surfaces.
TOMOE's 841T and 842T butterfly valves take full advantage of the superior qualities of PTFE: it protects all wetted parts and guides all stems. The 841T and 842T valves have a proven record of excellent performance and long life in heavy duty applications requiring tight shut-off, low torque and smooth operation.

Triple seal prevents leakage

The special feature of TOMOE butterfly valves is the seat ring design. The interference between the disc and the raised central area of the seat ring shuts off the flow completely. The resilient elastomer seat cushion ensures reliable shut off for the life of the valve.
TOMOE butterfly valves are bi-directional and withstand pressures to 0.7 MPa from either direction.
The upper and lower positions of the seat ring, where the stem passes through, use a triple seal design to prevent leakage to the atmosphere as shown in the illustration.

General Description

Chemically resistant butterfly valves with a proven record of excellent performance and long life in heavy duty applications.

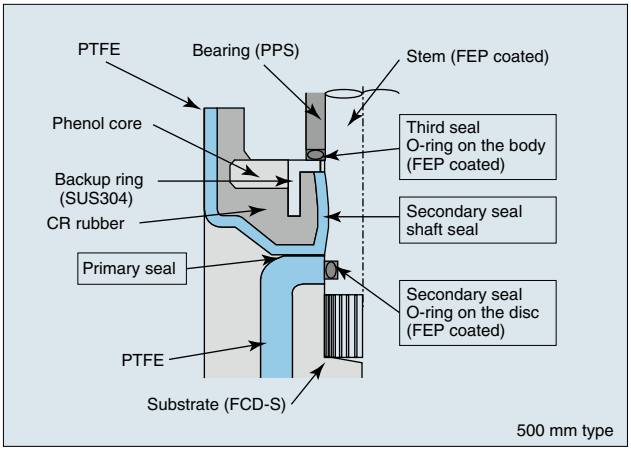

Where you can see advantages over other types of valves

1. In corrosion resistant pipelines requiring mechanical strength as well as heat resistance.
   Chemical Industry: Chlorine gas, acentric acid, sulfuric acid, hydrochloric acid, and other highly corrosive fluids.
2. In non-toxic environments where the fluid must not contact any metallic or organic materials.
   Food Industry: Cooking oil, seasoning, syrup, and other food products.
3. In reduced pressure or high temperature pipelines where conventional valves cannot be used because of piping space requirements and valve weight.
   General Industry: Steam lines, hot air, special process gases, dyes, and so on.
4. In processes involving hazardous fluids that require clean pipelines free from machining burrs, scales, and grease.
   Piping: Pipelines for oxygen and other highly oxidying agents.
5. In processes requiring sanitation or vacuum service. vacuum service.
   Handling: Processing food, transporting powder or granular solids.
6. In low temperature processes where low heat gain is an advantage.
   Cooling: Cooling air, chilled water, and brine.

Standard Specifications

Type		841T	842T
Body shape (centring method)		Concentric design, wafer type	
Valve nominal size		350, 400, 450, 500, 600mm	350, 400, 450, 500, 600mm
Applicable flange standard		JIS 10K, ANSI 125 lb/150 lb, DIN NP10, BS 4504 PN10, BS 10Table E	
Face-to-face dimensions		Manufacturer standard	
Max. working pressure		0.7 MPa	
Seat leakage		Tight shut-off	
Flow direction		Bi-directional	
Pressure test	Body shell	1.05 MPa (Hydraulic)	
	Seat leakage	0.7 MPa (Pneumatic, 350mm and higher: Hydraulic)	
Working temperature range		- 10 to 100 degrees C	
Working temperature in continuous use ※1		0 to 90 degrees C	
Standard materials	Body	FCD-S	
	Disc	SCS14	FCD-S+ PTFE lining
	Stem	SUS316	S45C+FEP coating
	Seat ring	PTFE (back-up rubber: CR)	
Top flange		Manufacturer standard	
Applicable gaskets		Rubber gasket cannot be used. Moulded gaskets require special dimensions (refer to dimension chart). Off-the-shelf seat gaskets can be used for 250 to 400mm. 450 to 600mm require special inner diameter dimensions (refer to dimension chart).	
Coating		250mm and 300mm: Epoxy resin coated (Munsell N7) 350mm and larger: Lacquer primer (Munsell N7)	

※1 "Working temperature in continuous use" stands for the temperature continuously kept exceeding one hour.

841T / 842T Expanded View of Components

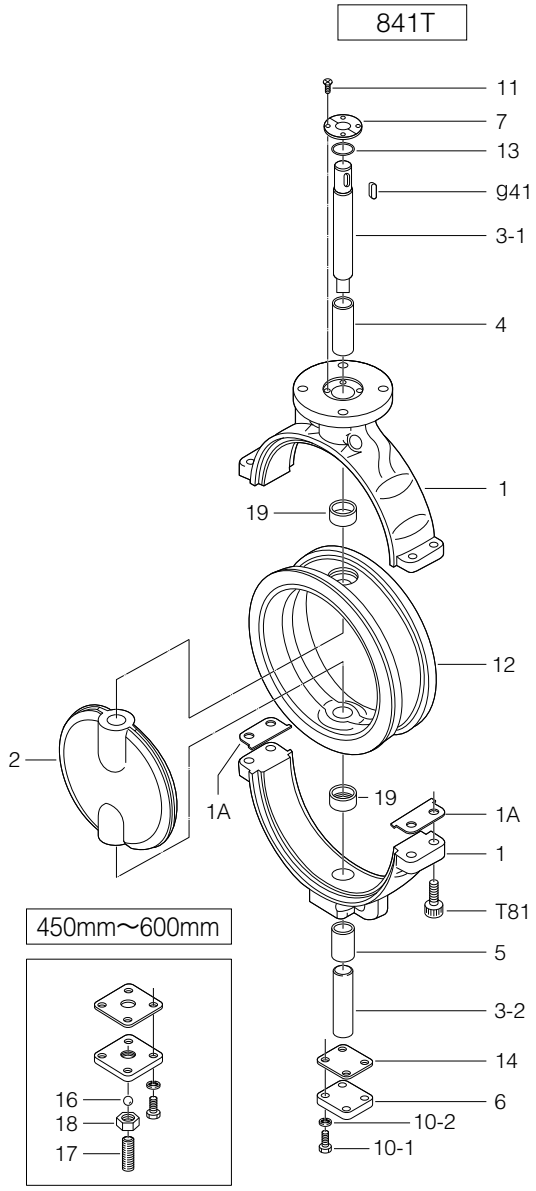

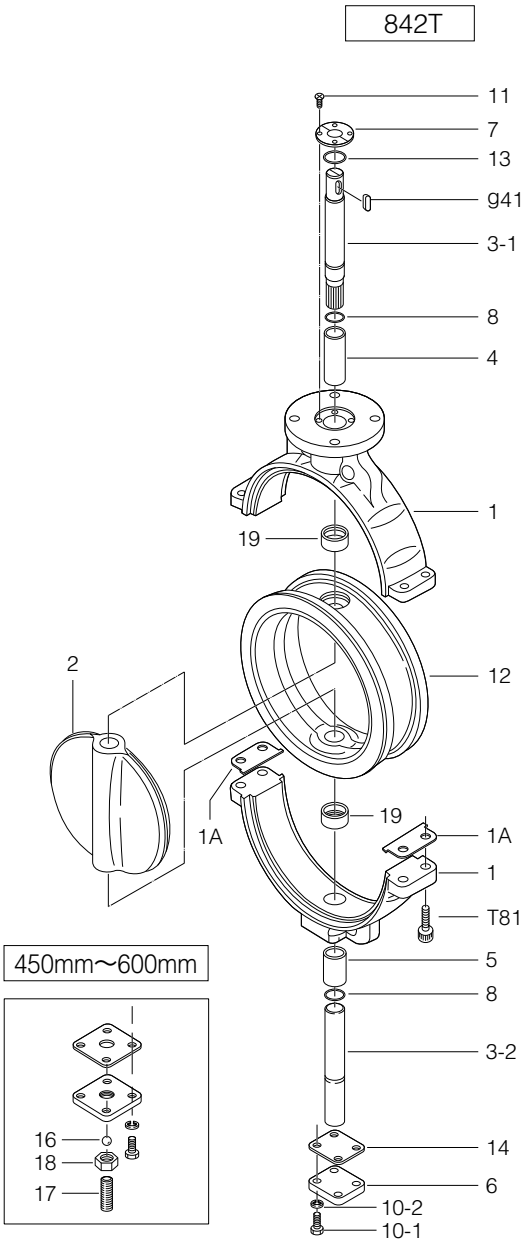

■841T Parts list

No.	Description	Q'ty	Remarks
1	Body	1	
★ 1A	Packing	2	
2	Disc	1	
3-1	Upper stem	1	
3-2	Lower stem	1	
★ 4	Bushing	1	
★ 5	Bushing	1	
6	Bottom cover	1	
7	Retainer plate	1 Set	
10-1	Hexagon bolt	4	
10-2	Spring washer	4	
11	Machine screw	4	
★ 12	Seat ring	1	
★ 13	O-ring	1	
14	Gasket	1	
16	Ball	1	Only 450mm to 600mm
17	Hollow bolt	1	Only 450mm to 600mm
18	Lock nut	1	Only 450mm to 600mm
19	Back-up rubber	2	
T81	Hexagon hole bolt	4	
g41	Key	1	

■842T Parts list

No.	Description	Q'ty	Remarks
1	Body	1	
★ 1A	Packing	2	
2	Disc	1	
3-1	Upper stem	1	
3-2	Lower stem	1	
★ 4	Bushing	1	
★ 5	Bushing	1	
6	Bottom cover	1	
7	Retainer plate	1 Set	
★ 8	O-ring	2	
10-1	Hexagon bolt	4	
10-2	Spring washer	4	
11	Machine screw	4	
★ 12	Seat ring	1	
★ 13	O-ring	1	
14	Gasket	1	
16	Ball	1	Only 450mm to 600mm
17	Hollow bolt	1	Only 450mm to 600mm
18	Lock nut	1	Only 450mm to 600mm
19	Back-up ring	2	
T81	Hexagon hole bolt	4	
g41	Key	1	

Remark: The ★ indicates recommended spare parts. They are supplied as "Seat ring set" with a small hexagonal spanner to remove hollow bolt.

841T/842T Actuator selection chart

■841T/842T

Model	Category	Size (mm / inch)				
		350	400	450	500	600
		14	16	18	20	24
2S	Standard / Heavy duty	MGH-3				MGH-4
3A	Standard	TGA-125	TGA-140	TGA-160		TGA-200
	Heavy duty	TGA-140	TGA-160	TGA-180		
3U,3K	Standard / Heavy duty	TG-14S			TG-20S	
4 I	ON-OFF Control	4 I-4				
4L	Standard / Heavy duty	LTKD-01 0.4kW/MGH-3			LTKD-02 0.75kW/ MGH-3	LTKD-05 0.75kW/ MGH-4

Selection criteria		
	Standard	Select when none of the following heavy duty items apply.
	Heavy duty	Select when any of the following items apply. ①Powder or high viscosity fluid (crude oil, etc.) ②Control specification (with positioner) ③Emergency open valve or pipe dead end valve

841T/842T Pressure-temperature rating

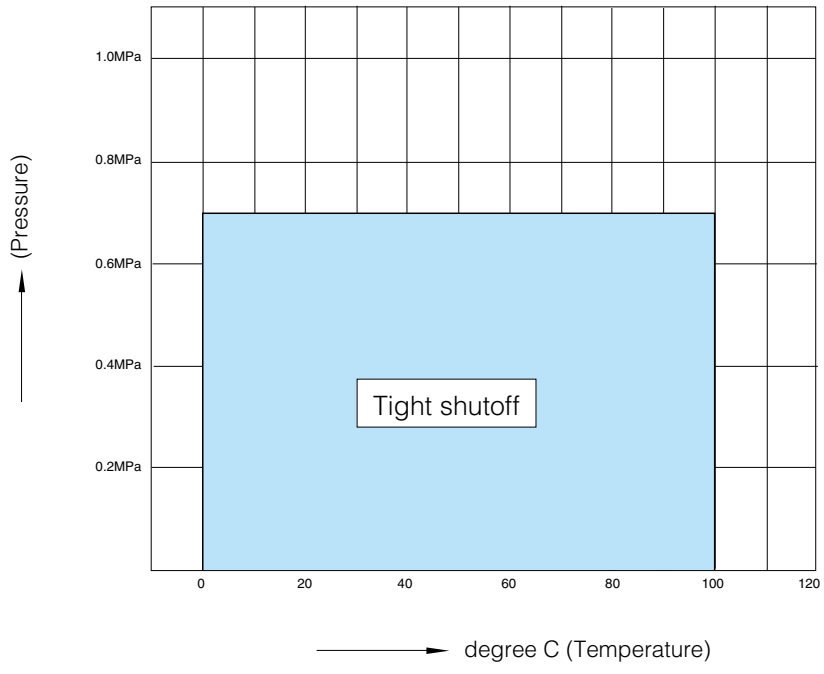

■841T/842T

Nominal size		Dimension (mm)															Approx. Mass (kg)
mm	inch	φd	φD	L	H_1	H_2	a_1	a_2	$φd_2$	b	t_2	t	D_1	C_1	N	B.H.	
350	14	332	428	100	293	320	50	43	40	10	3.5	20	200	170	4	19	60
400	16	383	491	110	323	360	50	43	40	10	3.5	20	200	170	4	19	80
450	18	435	540	120	367	390	60	53	47	12	3.5	20	200	170	4	19	123
500	20	482	595	140	383	420	60	53	47	12	3.5	20	200	170	4	19	188
600	24	581	700	160	478	490	75	65	65	18	6	25	260	220	4	23	266

■841T 350mm to 600mm

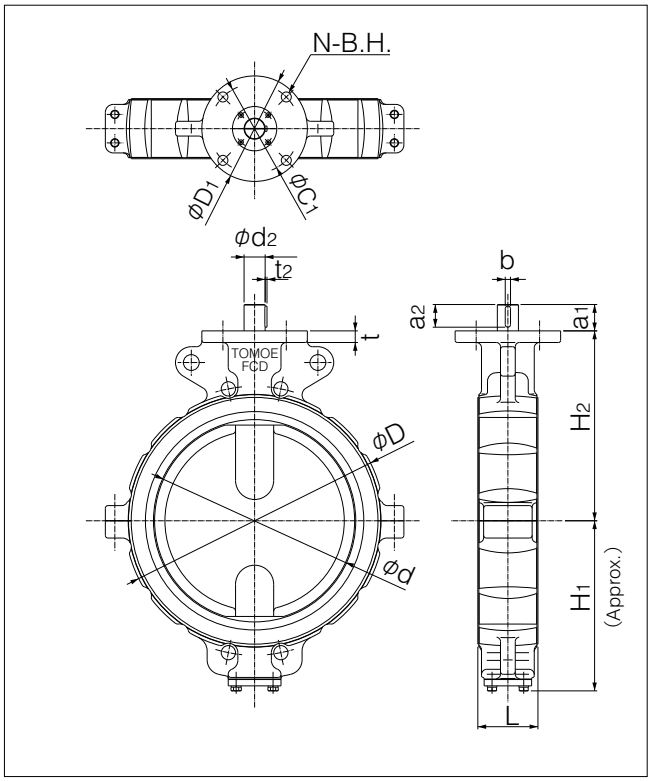

■842T 350mm to 600mm

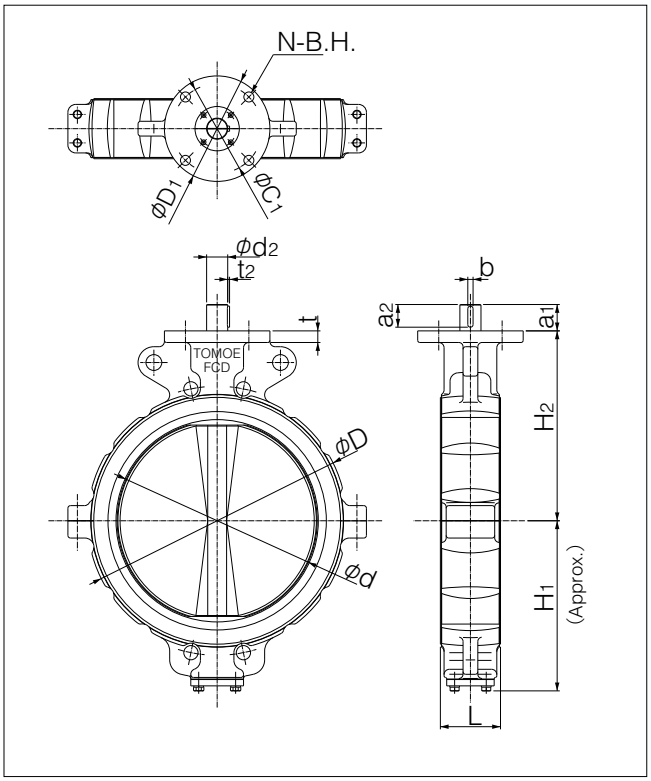

Worm gear type 841T-2S(350mm to 600mm) / 842T-2S(350mm to 600mm)

■841T/842T

Nominal size		Dimension (mm)										Gear type	Approx. Mass (kg)
mm	inch	ϕd	ϕD	L	H_1	H_2	H_3	E	K	F	W		
350	14	332	428	100	293	320	55	117	164	325	280	MGH-3	93
400	16	383	491	110	323	360	55	117	164	325	280	MGH-3	113
450	18	435	540	120	367	390	55	117	164	335	355	MGH-3	155
500	20	482	595	140	383	420	55	117	164	335	355	MGH-3	220
600	24	581	700	160	478	490	65	140	198	400	450	MGH-4	320

■841T/842T-2S

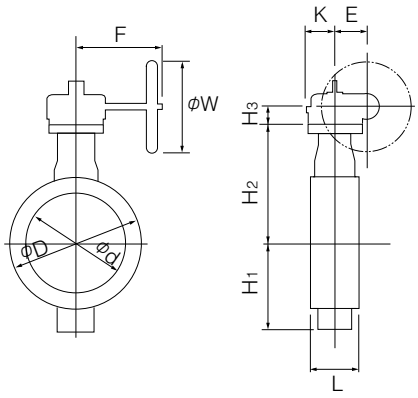

■2S Installation direction

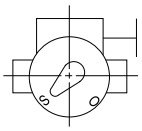	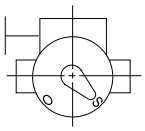	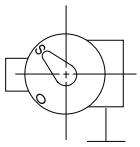	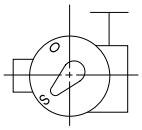
2SA (standard)	2SAR	2SB	2SBR

Double-acting pneumatic cylinder type 841T-3A(350mm to 600mm) / 842T-3A(350mm to 600mm)

■ Standard

Nominal size		Dimension (mm)										Cylinder type	Approx. Mass (kg)
mm	inch	φd	φD	L	H_1	H_2	H_3	A	P	f_1	f_2		
350	14	332	428	100	293	320	359	743	362	100	164	TGA-125	106
400	16	383	491	110	323	360	407	810	393	100	180	TGA-140	139
450	18	435	540	120	367	390	435	939	456	130	202	TGA-160	220
500	20	482	595	140	383	420	435	939	456	130	202	TGA-160	260
600	24	581	700	160	478	490	570	1163	564	160	253	TGA-200	450

■ Heavy duty

Nominal size		Dimension (mm)										Cylinder type	Approx. Mass (kg)
mm	inch	φd	φD	L	H_1	H_2	H_3	A	P	f_1	f_2		
350	14	332	428	100	293	320	407	810	393	100	180	TGA-140	106
400	16	383	491	110	323	360	435	939	456	130	202	TGA-160	190
450	18	435	540	120	367	390	478	1053	510	130	218	TGA-180	252
500	20	482	595	140	383	420	478	1053	510	130	218	TGA-180	292
600	24	581	700	160	478	490	570	1163	564	160	253	TGA-200	450

Selection criteria		
	Standard	Select when none of the following heavy duty items apply.
	Heavy duty	Select when any of the following items apply. ①Powder or high viscosity fluid (crude oil, etc.) ②Control specification (with positioner) ③Emergency open valve or pipe dead end valve

■841T/842T-3A

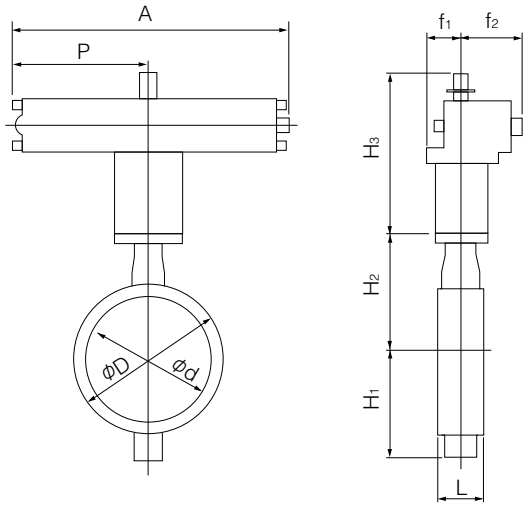

■3A Installation direction

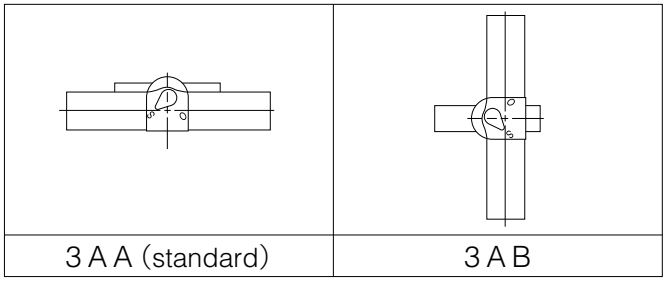

3 A A (standard)	3 A B

Single-acting pneumatic cylinder type 841T-3U(Air to open: 250mm to 600mm) / 841T-3K(Air to close: 250mm to 600mm)
842T-3U(Air to open: 350mm to 600mm) / 842T-3K(Air to close: 350mm to 600mm)

■ Standard

Nominal size		Dimension (mm)										Cylinder type	Approx. Mass (kg)
mm	inch	φd	φD	L	H_1	H_2	H_3	A	P	f_1	f_2		
350	14	332	428	100	293	320	340	1255	865	131	257	TG-14S	246
400	16	383	491	110	323	360	340	1255	865	131	257	TG-14S	266
450	18	435	540	120	367	390	340	1255	865	131	257	TG-14S	305
500	20	482	595	140	383	420	474	1655	1095	164	348	TG-20S	588
600	24	581	700	160	478	490	474	1655	1095	164	348	TG-20S	665

■ Heavy duty

Nominal size		Dimension (mm)										Cylinder type	Approx. Mass (kg)
mm	inch	φd	φD	L	H_1	H_2	H_3	A	P	f_1	f_2		
350	14	332	428	100	293	320	340	1255	865	131	257	TG-14S	246
400	16	383	491	110	323	360	474	1655	1095	164	348	TG-20S	483
450	18	435	540	120	367	390	474	1655	1095	164	348	TG-20S	523
500	20	482	595	140	383	420	474	1655	1095	164	348	TG-20S	588
600	24	581	700	160	478	490	474	1655	1095	164	348	TG-20S	655

Selection criteria		
	Standard	Select when none of the following heavy duty items apply.
	Heavy duty	Select when any of the following items apply. ①Powder or high viscosity fluid (crude oil, etc.) ②Control specification (with positioner) ③Emergency open valve or pipe dead end valve

■841T/842T-3U

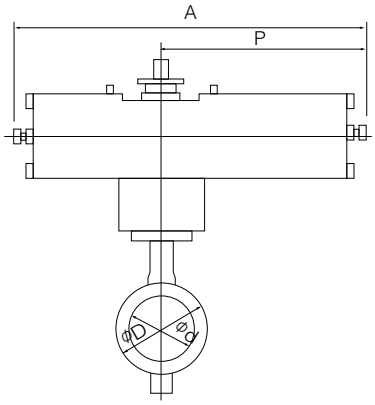

■841T/842T-3K

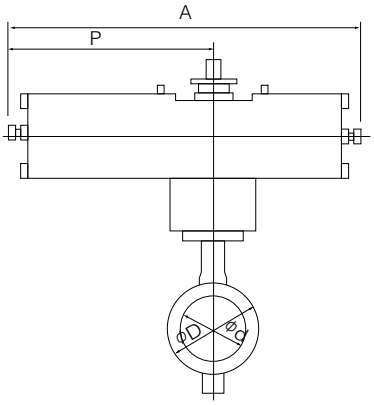

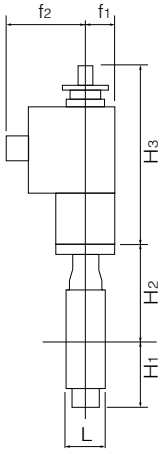

■3U Installation direction

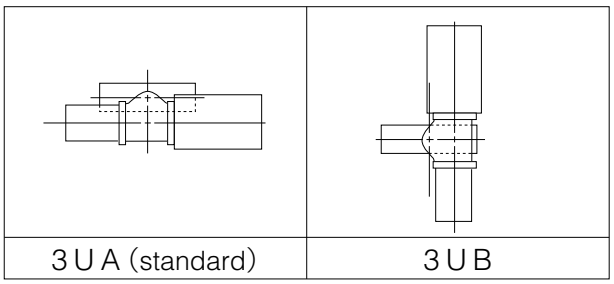

3UA (standard)	3UB

■3K Installation direction

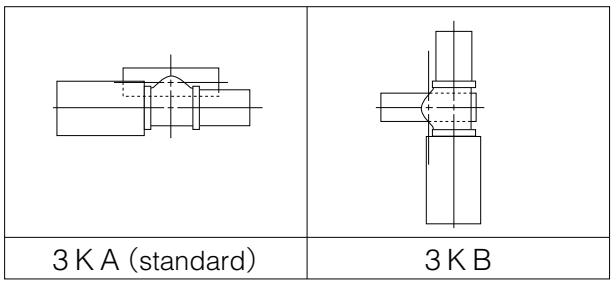

3KA (standard)	3KB

Single phase electric motor type 841T-4I(350mm to 450mm) / 842T-4I(350mm to 450mm)

■841T/842T

Nominal size		Dimension (mm)										Motor type	Approx. Mass (kg)
mm	inch	φd	φD	L	H_1	H_2	H_3	A	P	F	K		
350	14	332	428	100	293	320	233	388	223	246	136	4 I-4	89
400	16	383	491	110	323	360	233	388	223	246	136	4 I-4	109
450	18	435	540	120	367	390	233	388	223	246	136	4 I-4	158

■841T/842T-4I

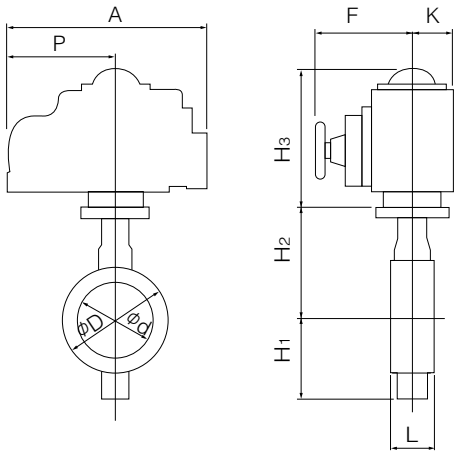

■4I Installation direction

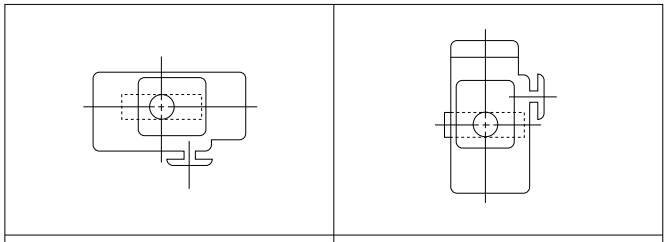

4 I A (standard)	4 I B

Three phase motor actuator type 841T-4L(350mm to 600mm) / 842T-4L(350mm to 600mm)

■841T/842T

Nominal size		Dimension (mm)										Motor type	Approx. Mass (kg)
mm	inch	φd	φD	L	H_1	H_2	H_3	E	K	F	M	P	
350	14	332	428	100	293	320	458	117	164	533	373	230	LTKD-01 0.4kW /MGH-3	186
400	16	383	491	110	323	360	458	117	164	533	373	230	LTKD-01 0.4kW /MGH-3	206
450	18	435	540	120	367	390	458	117	164	533	373	230	LTKD-01 0.4kW /MGH-3	249
500	20	482	595	140	383	420	492	117	164	567	370	230	LTKD-02 0.75kW /MGH-3	328
600	24	581	700	160	478	490	570	140	198	637	440	230	LTKD-05 0.75kW /MGH-4	485

■841T/842T-4L

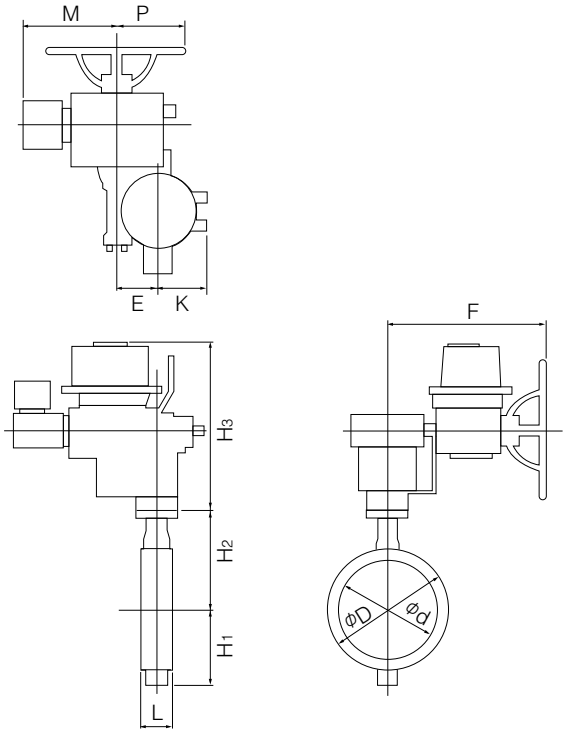

■4L Installation direction

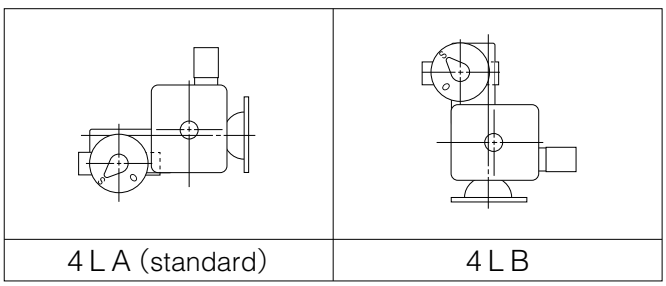

4 L A (standard)	4 L B

841T Cv value/pressure loss coefficient

●Cv value(841T)

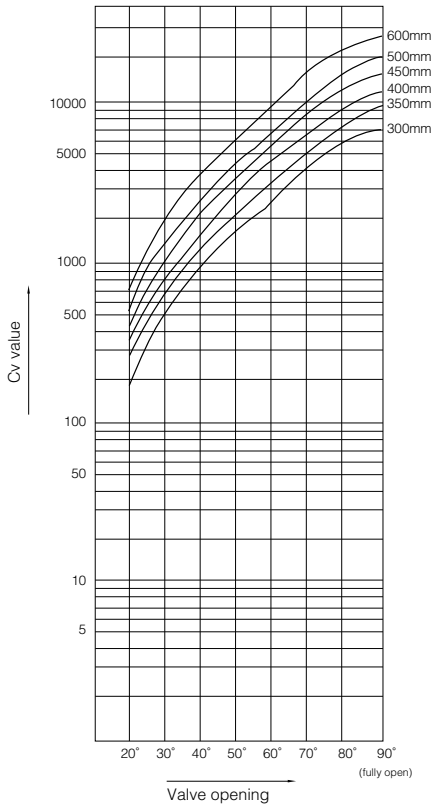

●Pressure loss coefficient(841T)

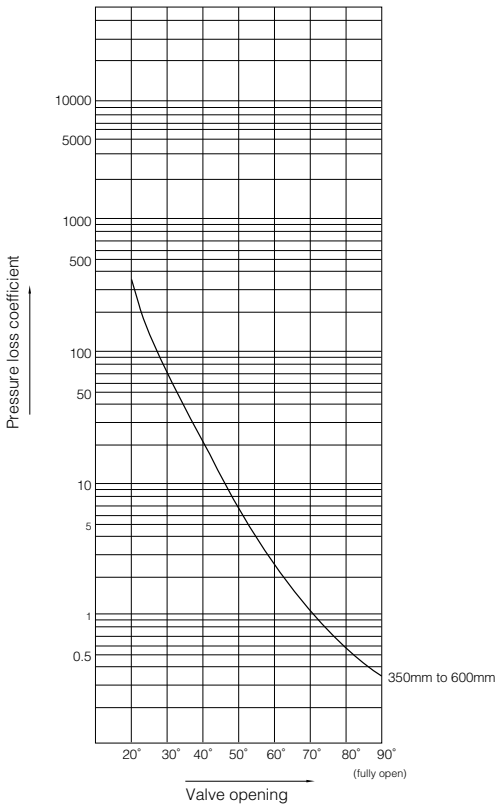

841T Cv value

Nominal size		Valve opening							
mm	inch	20˚	30˚	40˚	50˚	60˚	70˚	80˚	90˚
350	14	218	646	1224	2074	3373	5223	7784	9200
400	16	287	869	1632	2703	4306	6766	10289	12000
450	18	364	1150	2122	3437	5510	8993	13081	15500
500	20	450	1401	2589	4210	6753	10966	15993	19000
600	24	656	2060	3795	6141	9835	15952	23001	27600

841T Pressure loss coefficient

Nominal size		Valve opening							
mm	inch	20˚	30˚	40˚	50˚	60˚	70˚	80˚	90˚
350	14	600	68	19	7	3	1	0.4	0.3
400	16	606	66	19	7	3	1	0.4	0.3
450	18	611	61	18	7	3	1	0.4	0.3
500	20	619	64	19	7	3	1	0.4	0.3
600	24	618	63	18	7	3	1	1	0.3

842T Cv value/pressure loss coefficient

●Cv value(842T)

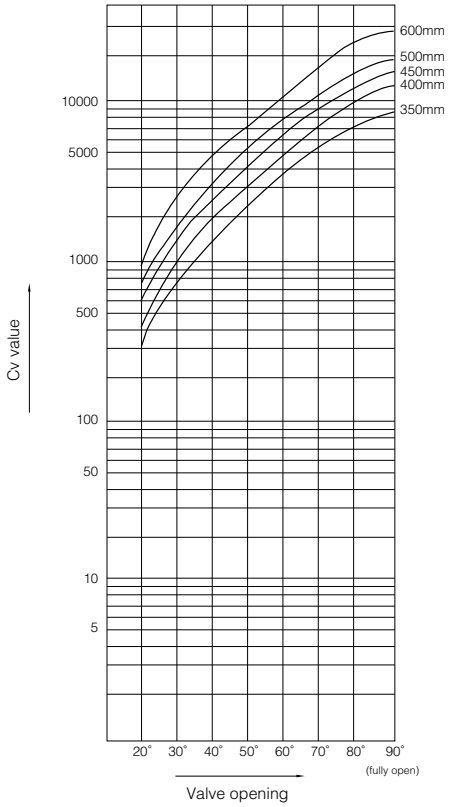

●Pressure loss coefficient(842T)

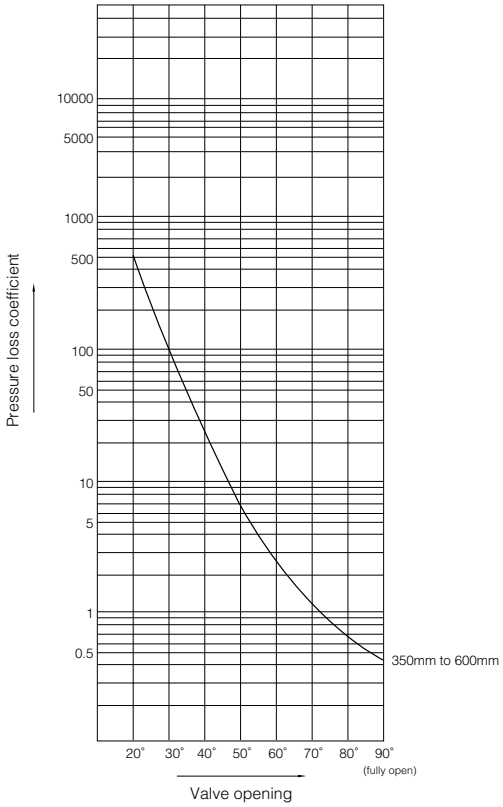

842T Cv value

Nominal size		Valve opening							
mm	inch	20°	30°	40°	50°	60°	70°	80°	90°
350	14	284	766	1465	2264	3675	5349	7378	8800
400	16	384	1060	1993	3015	4845	7209	9860	12000
450	18	558	1298	2339	3888	6060	8917	12455	15000
500	20	586	1608	3078	4738	7473	11002	15154	18000
600	24	878	2414	4476	6871	11346	16828	22464	26000

842T Pressure loss coefficient

Nominal size		Valve opening							
mm	inch	20°	30°	40°	50°	60°	70°	80°	90°
350	14	354	49	13	6	2	1	1	0.3
400	16	337	44	13	5	2	1	1	0.3
450	18	261	48	15	5	2	1	1	0.3
500	20	365	49	13	6	2	1	1	0.3
600	24	345	46	13	6	2	1	1	0.3

841T/842T Applicable flange standard

Nominal size		JIS	ANSI		BS4504	DIN	BS10
mm	inch	10K	125Lb	150Lb	PN10	NP10	Table E
350	14	D	D	D	D	D	D
400	16	D	D	D	D	D	D
450	18	T	T	T	T	T	T
500	20	T	T	T	T	T	×
600	24	T	T	T	T	T	×

D : With flange drilling
T : With flange tapping
× : Not applicable

841T/842T Applicable pipe list in case of A

Nominal size		SGP	Sch20	Sch40	VP (TS Flange)	Sch10S	Sch20S	Minimum internal diameter of piping (mm)
mm	inch							
350	14	○	○	○	○	–	–	322
400	16	○	○	○	–	–	–	372
450	18	○	○	○	–	–	–	421
500	20	○	○	○	–	–	–	463
600	24	–	○	○	–	–	–	566

841T/842T Applicable pipe list in case of B

Nominal size		SGP	Sch20	Sch40	Sch10S	Sch20S
mm	inch					
350	14	○	○	○	–	–
400	16	○	○	○	–	–
450	18	○	○	○	–	–
500	20	○	○	○	–	–
600	24	–	○	○	–	–

Remark 1: ○=Applicable
Remark 2: Butterfly valves are inserted into a pipe that was fitted with the disc when fully open.
In cases where you are using a pipe or flange that is less than the minimum inner pipe diameter, use is still possible if means are taken such as inserting a spacer between the valve and flange.
For details, please consult us.

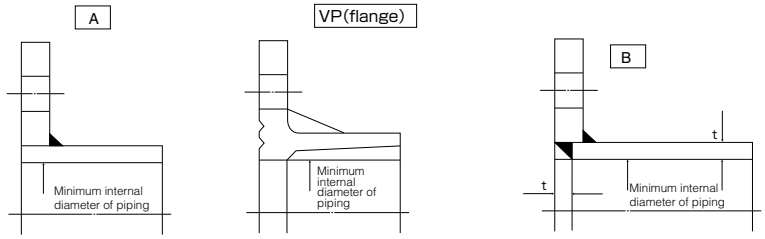

841T/842T Applicable gasket dimensions

Nominal size		841T/842T			
mm	inch	Recommended effective sealing I.D. (mm)	Max. effective sealing I.D. (mm)	Minimum I.D. (mm)	Min. effective sealing I.D. (mm)
350	14	359	359	332	416
400	16	410	410	383	479
450	18	457	457	435	533
500	20	508	508	482	590
600	24	610	610	581	693

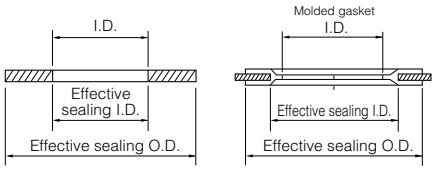

841T/842T Applicable standard for piping gasket list

Nominal size		Recommended effective sealing I.D. (mm)	Sheet gasket		PTFE molded gasket	
mm	inch		JIS10K	ANSI 125Lb/150Lb	JIS10K	ANSI 125Lb/150Lb
350	14	359	○	○	×	×
400	16	410	○	○	×	×
450	18	457	×	×	×	×
500	20	508	×	×	×	×
600	24	610	×	×	×	×

○ : Standard gasket can be used
× : Standard gasket cannot be used. Use one with special dimensions.

841T/842T Piping bolt and nut sizes

■Piping bolts sizes

Nominal size		JIS 10K		ANSI 125Lb／150Lb	
mm	inch	Long bolts and nuts	Setting bolts	Long bolts and nuts	Setting bolts
350	14	16-M22×215×45	——	12-U1 ×260×60	——
400	16	16-M24×230×50	——	16-U1 ×260×60	——
450	18	16-M24×245×50	8-M24×70×54	12-U1 1/8×285×65	8-U1 1/8× 85×70
500	20	16-M24×265×50	8-M24×70×54	16-U1 1/8×310×65	8-U1 1/8× 90×70
600	24	20-M30×300×60	8-M30×80×66	16-U1 1/4×345×70	8-U1 1/4×100×70

Remarks:
1. Use thin hexagon nuts. For ANSI 125Lb and 150Lb, use heavy hexagon nuts.
2. If the nominal diameter of the unified screw exceeds 1 inch, make the threading 8 threads per inch.
3. The table above does not apply if the material used is a special material which is not SS400.

Long bolts and nuts (full thread)

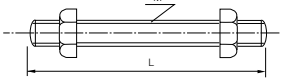

Setting bolts (Hexagon bolts)

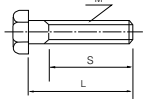

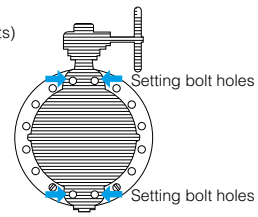

Example

Long bolts: 12 - M22 × 185 × 46
(N - M × L × S)

Setting bolts (Hexagon bolts): 4 - M30 × 95 × 65
(N - M × L × S)

MEMO

700Z



Valve nominal size

40 to 300mm

Max.working pressure MPa

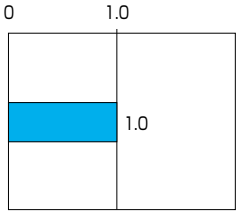

Working temperature range ˚C

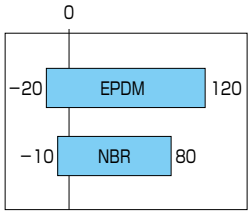

JIS B 2032 Compliant
(This product conforms to General Specifications for Machinery and Equipment of the Ministry of Land, Infrastructure, Transport and Tourism.)

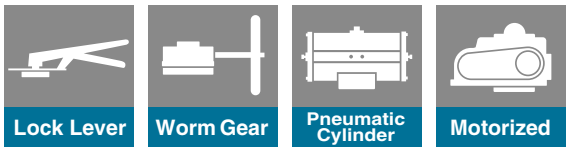

Evolution of Long Sellers Sealing performance and Durability Improved!

- Gears and lever have been integrated with valve body to achieve both functionality and downsizing.
- Resin-aluminum hybrid gearbox improves the strength and durability of valves with anti-condensation performance added.
- High anti-condensation performance of the Z series has been inherited. (Gear valves)
- New lightweight valve disc with optimized seal shape improves the sealing performance and operability of valves.
- Modified rubber seat structure stabilizes the sealing performance of valve seat.
- Strong bearings have been adopted to significantly improve the durability of valve opening/closing. (Automatic valves)
- Special valve body has been developed for automatic valves to improve their strength and durability.

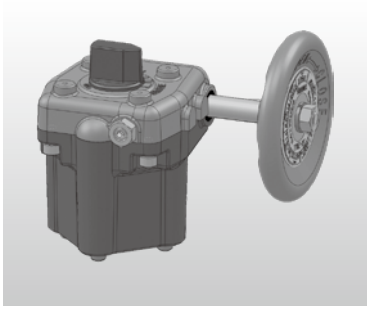

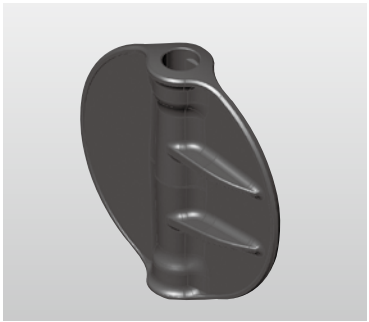

***Note : These valves are different in face-to-face dimensions from the first 700Z (Coating color: Light blue; Munsell 10BG-6/4) developed in 1980 and discontinued in August 2003.**

Standard Specifications

Body type(Connection)		Concentric rubber seated butterfly valve, flangeless(wafer)type
Valve nominal size		40, 50, 65, 80, 100, 125, 150, 200, 250, 300mm
Flange accommodation		JIS5K/10K、ASME125/150Lb、DIN NP10, BS4504 PN10, GB/T 9113.1 1MPa
Face-to-face dimensions		JIS B 2002-1987 Series 46(ISO 5752 table5/BS5155/API609)
Max. working pressure		1.0 MPa
Allowable seat leakage rate		JIS B 2003-2013 Rate A(Tight shut-off)
Flow direction		Bi-direction
Test Pressure	Body shell test	1.5 MPa(Hydraulic pressure)
	Seat leak test	1.1 MPa(Pneumatic pressure)
Working temperature range		EPDM: -20 ～ 120℃(Option:NBR: -10 ～ 80℃)
Working temperature in continuous use※1		EPDM: 0 ～ 70℃(Option:NBR: 0 ～ 60℃)
Standard materials	Body	Aluminum die cast alloy ADC12
	Disc※2	SCS13(A351 CF8), SCS14(A351 CF8M), PPS(40～200mm)
	Stem※2	SUS420J2(AISI420)
	Seat ring	EPDM※3,4(Option:NBR)
Top flange		Lever/Gear type: Valve integrated type, Cylinder/ Electric motor type: In accordance with ISO 5211
Actuator※5		Manual, pneumatic, electric
Pipe flow velocity(limit value)		Up to 3 m/s(Valve fully-open, continuous operation, ambient temp. and fresh water)
Coating		Urethane coating(Munsell 2.5BG 6/12)
Condensation property		No condensation in the upper part of gears at ambient temperature 30℃ and humidity 80% with cold water at 5℃※6

※1 'Working temperature in continuous use' stands for the temperature continuously kept exceeding on hour.
※2 Materials shown in ( ): equivalent materials in ASTM/AISI standard.
※3 If the fluid contains even a slight amount of oil, never use an EPDM rubber seat ring. If the fluid contains chlorine, the seat ring may deteriorate early due to combined factors including density and temperature. For details consult our sales office.
※4 In the pipe lines where chemicals containing calcium are supplied, it is recommended to use an EPDM rubber seat ring to protect pipes.
※5 The actuator of the product cannot be replaced.
※6 These values are based on data obtained in a laboratory and may vary if the temperature and humidity distributions in the field are not uniform. Even in an environment having these values, condensation can occur if ambient or water temperature changes suddenly.

700Z Actuator Selection Chart

Type	Model	Category	Size (mm / inch)									
			40	50	65	80	100	125	150	200	250	300
			1 1/2	2	2 1/2	3	4	5	6	8	10	12
Lock lever	1J,1T	Standard / Heavy duty	1J-1				1J-2		1T-2			
Worm gear	2F	Standard / Heavy duty	2F-G0Z			2F-G00		2F-G01		2F-G02	2F-G03	
Double-action pneumatic	7E	Standard / Heavy duty	T35			T85		T200		T380	T750	
Single-action pneumatic	7G,7F 3K,3U	Standard / Heavy duty	T85S			T200S		T380S		T750S	TG-12S	
Single phase motor	4I	ON-OFF / Control	4I-00			4I-0		4I-1	4I-2		4I-2.5	4I-3

Note) In case of the single-phase motorized actuator 4I that has the following optional equipment, "Control" specification is applied.

- Micom unit
- Servo unit
- Speed control unit
- Potentiometer

Selection criteria		
	Standard	Select when none of the following heavy duty items apply.
	Heavy duty	Select when any of the following items apply. ①Gas, powder or high viscosity slurry (crude oil, etc.) ②Control specification (with positioner) ③Emergency open valve or pipe dead end valve

700Z Pressure-Temperature Rating

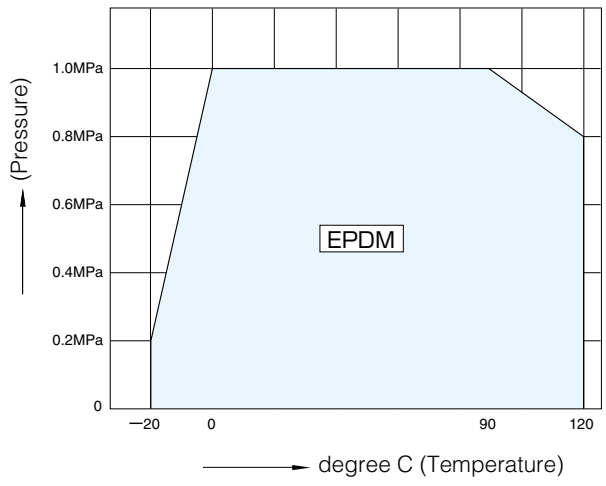

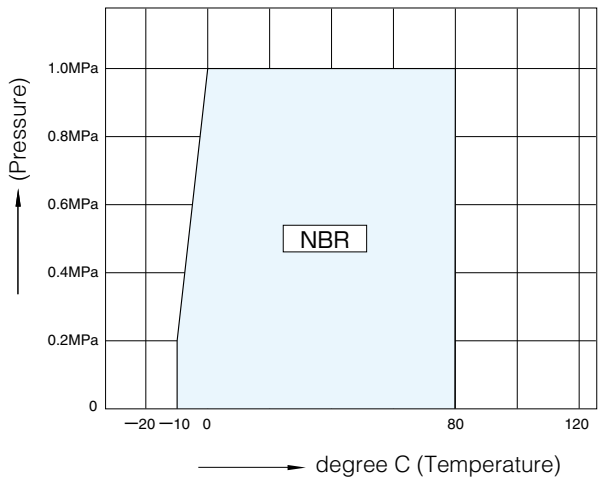

※Prolonged use in high temperature may deteriorate sealing ability or durability.

Lock Lever Type 700Z-1J(40mm to 125m)、1T(150m)

Nominalsize		Dimension (mm)									Approx. Weight (kg)
mm	inch	φd	φD	L	H1	H2	H3	Q	K	W	
40	1 1/2	45	80	35	47	144	56	72	49	160	0.8
50	2	56	91	43	57	150	56	72	49	160	0.9
65	2 1/2	69	111	46	64	163	56	72	49	160	1.1
80	3	84	125	46	77	151	56	72	49	160	1.4
100	4	104	147	52	94	162	70	72	49	200	1.9
125	5	130	180	56	108	190	70	72	49	200	3.0
150	6	153.5	210	56	125	201	96	88	63	300	5.0

■700Z-1J/1T

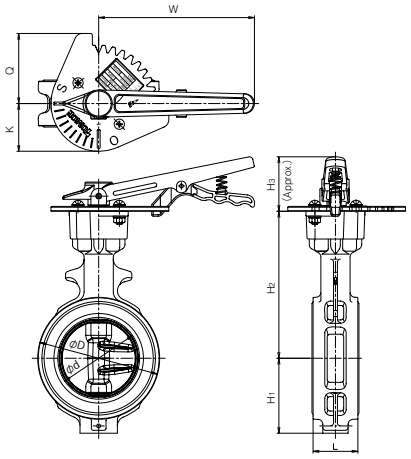

■1J Installation direction

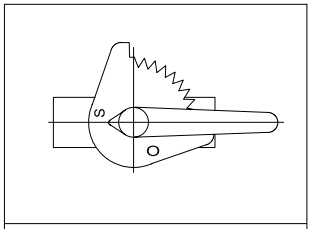

LS

Worm Gear Type 700Z-2F(40mm to 300mm)

Nominalsize		Dimension (mm)									Approx. Weight (kg)
mm	inch	φd	φD	L	H1	H2	E	K	F	φW	
40	1 1/2	45	80	35	47	160	22.5	26	72	70	0.8
50	2	56	91	43	57	166	22.5	26	72	70	1.0
65	2 1/2	69	111	46	64	179	22.5	26	72	70	1.2
80	3	84	125	46	77	172	28	31	76	70	1.7
100	4	104	147	52	94	183	28	31	76	70	2.2
125	5	130	180	56	108	211	46	42	133	100	3.8
150	6	153.5	210	56	125	222	46	42	133	100	4.7
200	8	199	255	60	167	257	53	40	162	125	7.2
250	10	253	322	68	186	316	71	54	206	200	13
300	12	302	375	78	216	348	71	54	206	200	18

■700Z-2F

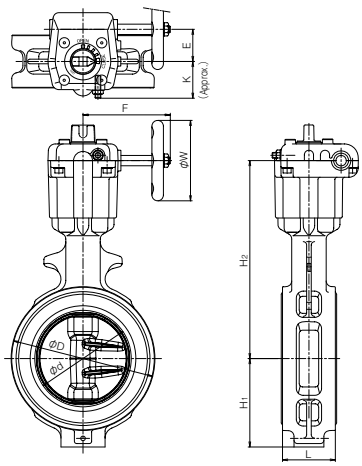

■2F Installation direction

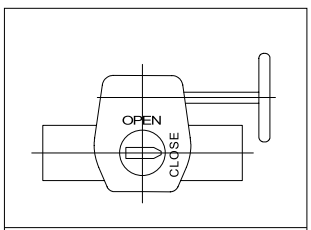

A

Double-acting Pneumatic Cylinder Type 700Z-7E(40mm to 300mm)

■Standard

Nominalsize		Dimension (mm)												Cylinder type	Approx. Weight (kg)
mm	inch	Φd	ΦD	L	H1	H2	H3	A	P	f1	f2	f3	t1		
40	1 1/2	45	80	35	47	132	125	228	116	57	29	35	1	T35	2.6
50	2	56	91	43	57	138	125	228	116	57	29	35	1	T35	2.7
65	2 1/2	69	111	46	64	151	125	228	116	57	29	35	1	T35	2.9
80	3	84	125	46	77	156	125	228	116	57	29	35	1	T35	3.4
100	4	104	147	52	94	167	168	276	142	75	47	51	1	T85	6.8
125	5	130	180	56	108	191	168	276	142	75	47	51	1.5	T85	8.1
150	6	153.5	210	56	125	202	203	346	176	79	57	51	1.5	T200	12.3
200	8	199	255	60	167	227	203	346	176	79	57	51	1.5	T200	14.5
250	10	253	322	68	186	280	231	423	214	91	69	63	1.5	T380	25.5
300	12	302	375	78	216	312	269	546	270	118	85	70	1.5	T750	39.6

■Heavy Duty

Nominalsize		Dimension (mm)												Cylinder type	Approx. Weight (kg)
mm	inch	Φd	ΦD	L	H1	H2	H3	A	P	f1	f2	f3	t1		
40	1 1/2	45	80	35	47	132	125	228	116	57	29	35	1	T35	2.6
50	2	56	91	43	57	138	125	228	116	57	29	35	1	T35	2.7
65	2 1/2	69	111	46	64	151	125	228	116	57	29	35	1	T35	2.9
80	3	84	125	46	77	156	168	276	142	75	47	51	1	T85	6.4
100	4	104	147	52	94	167	168	276	142	75	47	51	1	T85	6.8
125	5	130	180	56	108	191	203	346	176	79	57	51	1.5	T200	11.4
150	6	153.5	210	56	125	202	203	346	176	79	57	51	1.5	T200	12.3
200	8	199	255	60	167	227	231	423	214	91	69	63	1.5	T380	20.7
250	10	253	322	68	186	280	231	423	214	91	69	63	1.5	T380	25.5
300	12	302	375	78	216	312	269	546	270	118	85	70	1.5	T750	39.6

■700Z-7E

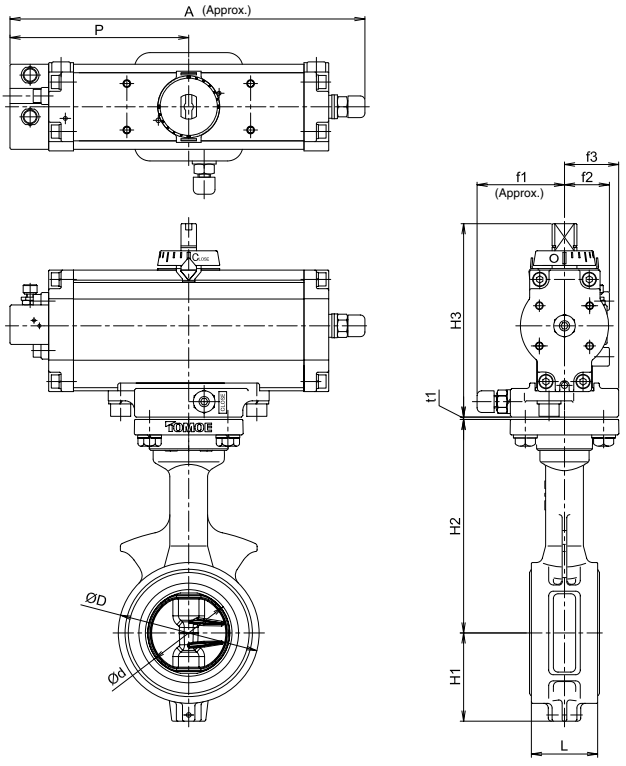

■7E Installation Direction

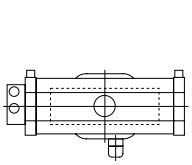

7EA

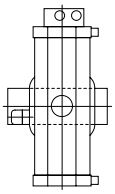

7EB

Single-acting Pneumatic Cylinder Type 700Z-7G(40mm to 200mm)/700Z-7F(40mm to 200mm)

■Standard

Nominalsize		Dimension (mm)												Cylinder type	Approx. Weight (kg)
mm	inch	φd	φD	L	H_1	H_2	H_3	A	P	f_1	f_2	f_3	t_1		
40	1 1/2	45	80	35	47	132	168	364	183	75	47	51	1	T85S	7.2
50	2	56	91	43	57	138	168	364	183	75	47	51	1	T85S	7.3
65	2 1/2	69	111	46	64	151	168	364	183	75	47	51	1	T85S	7.5
80	3	84	125	46	77	156	203	449	226	79	57	51	1	T200S	12.5
100	4	104	147	52	94	167	203	449	226	79	57	51	1	T200S	12.9
125	5	130	180	56	108	191	231	550	276	91	69	63	1.5	T380S	22.5
150	6	153.5	210	56	125	202	231	550	276	91	69	63	1.5	T380S	23.4
200	8	199	255	60	167	227	269	723	360	118	85	70	1.5	T750S	39.2
250	10	253	322	68	186	280	269	723	360	118	85	70	1.5	T750S	43.8

■Heavy Duty

Nominalsize		Dimension (mm)												Cylinder type	Approx. Weight (kg)
mm	inch	φd	φD	L	H_1	H_2	H_3	A	P	f_1	f_2	f_3	t_1		
40	1 1/2	45	80	35	47	132	168	364	183	75	47	51	1	T85S	7.2
50	2	56	91	43	57	138	168	364	183	75	47	51	1	T85S	7.3
65	2 1/2	69	111	46	64	151	203	449	226	79	57	51	1	T200S	12.0
80	3	84	125	46	77	156	203	449	226	79	57	51	1	T200S	12.5
100	4	104	147	52	94	167	231	550	276	91	69	63	1	T380S	21.2
125	5	130	180	56	108	191	231	550	276	91	69	63	1.5	T380S	22.5
150	6	153.5	210	56	125	202	269	723	360	118	85	70	1.5	T750S	37.0
200	8	199	255	60	167	227	269	723	360	118	85	70	1.5	T750S	39.2

■700Z-7G/7F

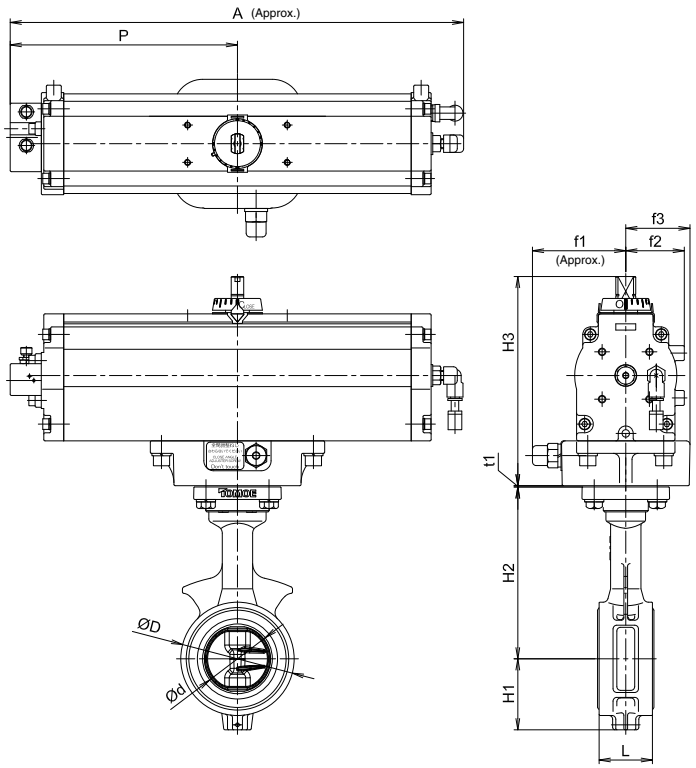

■7G/7F Installation Direction

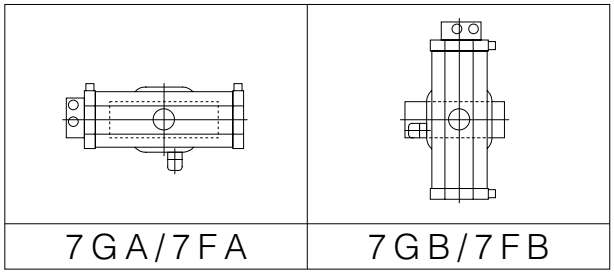

Single-acting Pneumatic Cylinder Type 700Z-3U(250mm to 300mm)

■Standard

Nominalsize		Dimension (mm)												Cylinder type	Approx. Weight (kg)
mm	inch	φd	φD	L	H_1	H_2	H_3	A	P	B	f_1	f_2	t_1		
250	10	253	322	68	186	280	307	1080	720	60	206	94	1.5	TG-12S	110.8
300	12	302	375	78	216	312	307	1080	720	60	206	94	1.5	TG-12S	115.3

■700Z-3U

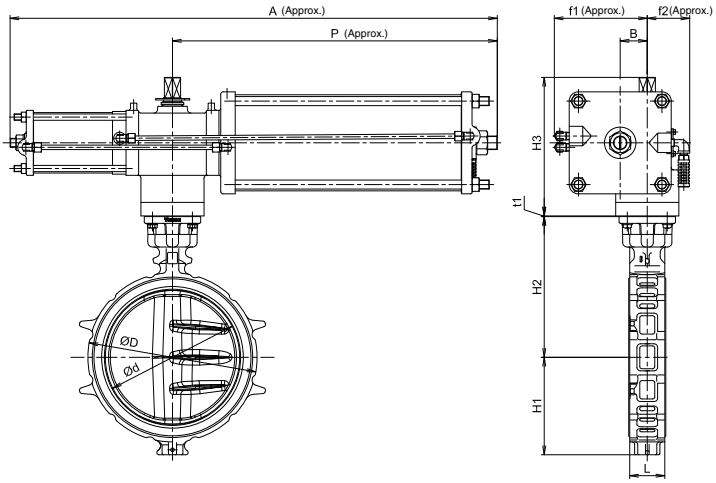

■3U Installation Direction

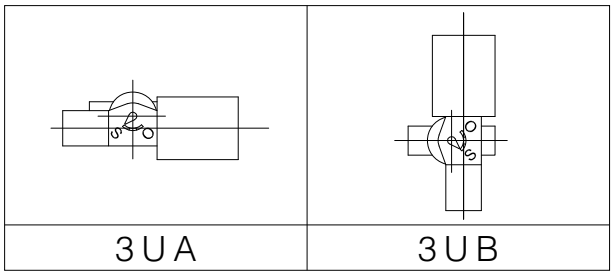

Single-acting Pneumatic Cylinder Type 700Z-3K(250mm to 300mm)

■Standard/Heavy Duty

Nominalsize		Dimension (mm)												Cylinder type	Approx. Weight (kg)
mm	inch	φd	φD	L	H_1	H_2	H_3	A	P	B	f_1	f_2	t_1		
250	10	253	322	68	186	280	307	1080	720	60	206	94	1.5	TG-12S	110.8
300	12	302	375	78	216	312	307	1080	720	60	206	94	1.5	TG-12S	115.3

■700Z-3K

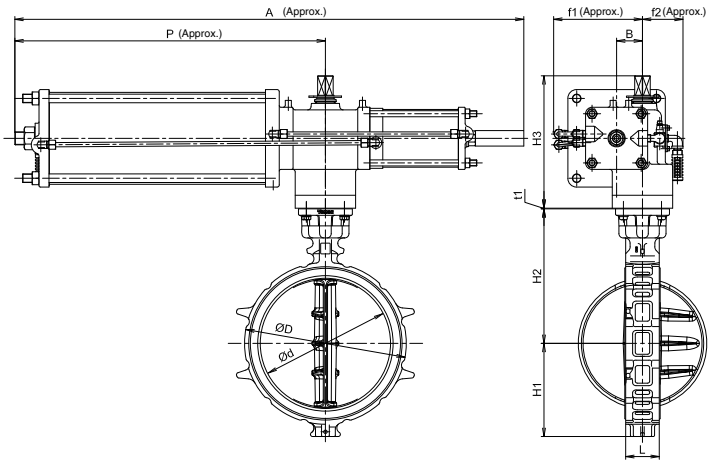

■3K Installation Direction

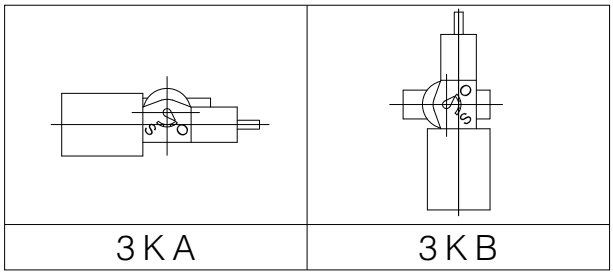

Single Phase Electric Motor Type 700Z-4 I (40mm to 300mm)

■ON-OFF

Nominal size		Dimension (mm)																Motor type	Approx. Weight (kg)
mm	inch	φd	φD	L	H1	H2	H3	H4	H5	H6	A1	A2	E	F	K	φW	t1		
40	1 1/2	45	80	35	47	132	121	—	100	57	84	77	39	58	45	80	1	4 I -00	3.0
50	2	56	91	43	57	138	121	—	100	57	84	77	39	58	45	80	1	4 I -00	3.1
65	2 1/2	69	111	46	64	151	121	—	100	57	84	77	39	58	45	80	1	4 I -00	3.3
80	3	84	125	46	77	156	150	—	100	43	100	102	43	85	54	80	1	4 I -0	6.1
100	4	104	147	52	94	167	150	—	100	43	100	102	43	85	54	80	1	4 I -0	6.5
125	5	130	180	56	108	191	165	—	100	61	138	114	12	126	65	70	1.5	4 I -1	10.3
150	6	153.5	210	56	125	202	198	—	100	80	167	143	14	154	85	100	1.5	4 I -2	16.2
200	8	199	255	60	167	227	198	—	100	80	167	143	14	154	85	100	1.5	4 I -2	18.4
250	10	253	322	68	186	280	201	20	100	80	167	143	14	154	85	100	1.5	4 I -2.5	26.3
300	12	302	375	78	216	312	230	4	100	98	223	165	23	246	136	200	1.5	4 I -3	41.0

■700Z-4 I (ON-OFF)

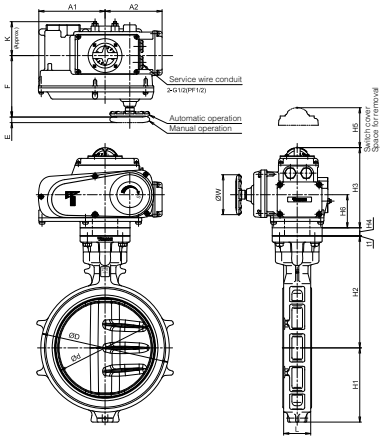

■4 I Installation Direction

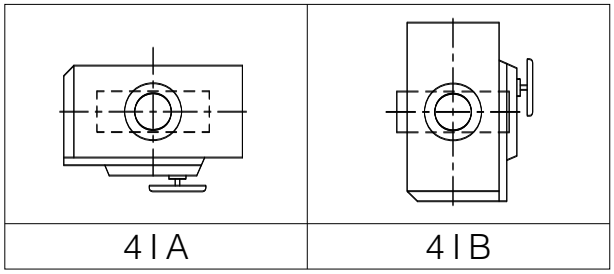

■Control

Nominal size		Dimension (mm)																Motor type	Approx. Weight (kg)
mm	inch	φd	φD	L	H1	H2	H3	H4	H5	H6	A1	A2	E	F	K	φW	t1		
40	1 1/2	45	80	35	47	132	176	—	100	43	100	102	43	85	54	80	1	4 I -0	5.3
50	2	56	91	43	57	138	176	—	100	43	100	102	43	85	54	80	1	4 I -0	5.4
65	2 1/2	69	111	46	64	151	176	—	100	43	100	102	43	85	54	80	1	4 I -0	5.6
80	3	84	125	46	77	156	176	—	100	43	100	102	43	85	54	80	1	4 I -0	6.1
100	4	104	147	52	94	167	176	—	100	43	100	102	43	85	54	80	1	4 I -0	6.5
125	5	130	180	56	108	191	191	—	100	61	138	114	12	126	65	70	1	4 I -1	10.3
150	6	153.5	210	56	125	202	224	—	100	80	167	143	14	154	85	100	1	4 I -2	16.2
200	8	199	255	60	167	227	224	—	100	80	167	143	14	154	85	100	1	4 I -2.5	20.0
250	10	253	322	68	186	280	227	20	100	80	167	143	14	154	85	100	1.5	4 I -2.5	26.3
300	12	302	375	78	216	312	255	4	100	98	223	165	23	246	136	200	1.5	4 I -3	41.0

■700Z-4 I (Control)

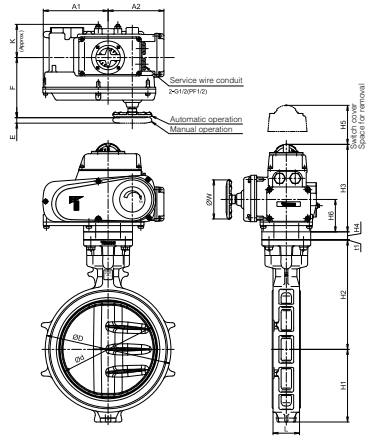

■4 I Installation Direction

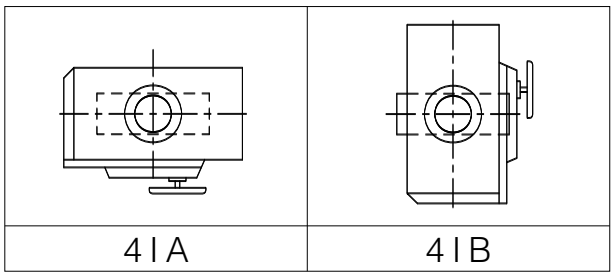

700Z Cv value / pressure loss coefficient

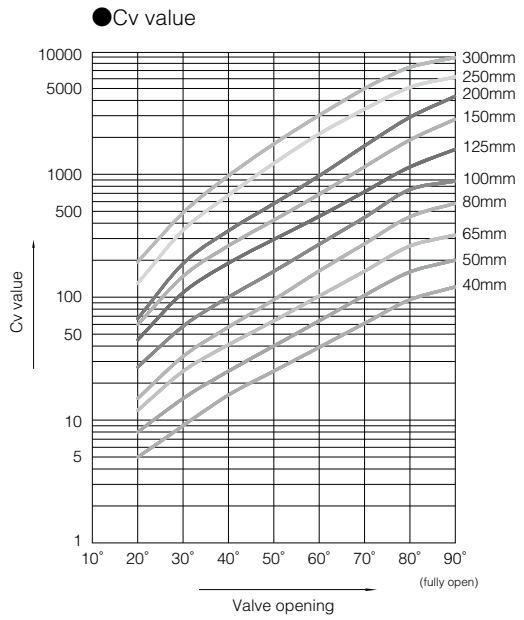

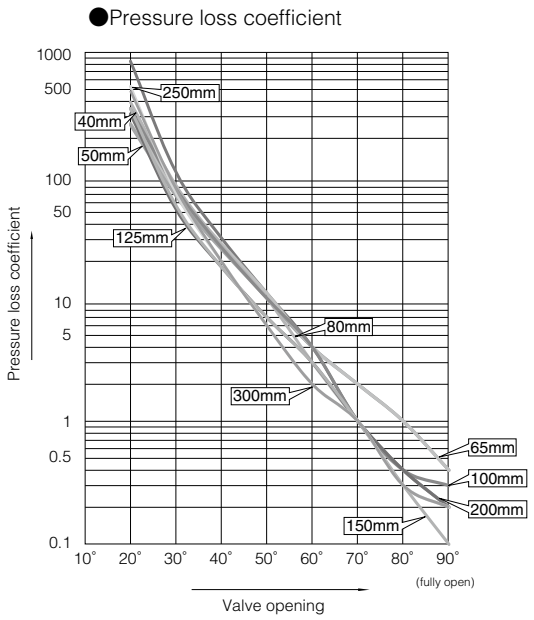

700Z Cv value

Nominal size		Valve opening							
mm	inch	20˚	30˚	40˚	50˚	60˚	70˚	80˚	90˚
40	1 1/2	5	9	16	25	39	61	95	121
50	2	8	15	25	40	64	103	160	200
65	2 1/2	12	25	41	64	102	162	260	320
80	3	15	33	57	95	163	271	450	580
100	4	27	58	100	162	269	444	749	880
125	5	45	109	189	295	453	719	1144	1590
150	6	60	148	262	423	685	1147	1897	2800
200	8	67	188	347	576	969	1698	2902	4300
250	10	130	351	675	1225	2125	3375	5091	6200
300	12	194	487	972	1764	3011	4966	7412	8900

700Z Pressure loss coefficient

Nominal size		Valve opening							
mm	inch	20˚	30˚	40˚	50˚	60˚	70˚	80˚	90˚
40	1 1/2	264	72	26	10	4	2	1	0.4
50	2	257	68	25	10	4	2	1	0.4
65	2 1/2	310	75	28	11	4	2	1	0.4
80	3	394	83	27	10	3	1	0.4	0.2
100	4	350	78	26	10	4	1	0.4	0.3
125	5	316	53	18	7	3	1	0.4	0.2
150	6	348	57	18	7	3	1	0.3	0.1
200	8	849	106	31	11	4	1	0.4	0.2
250	10	528	72	20	6	2	1	0.3	0.2
300	12	488	78	20	6	2	1	0.3	0.2

700Z Applicable pipe list in case of A, B

Nominal size		SGP	Sch20	Sch40	VP (TS flange)	Sch10S	Sch20S	Minimum internal diameter of piping (mm)
mm	inch							
40	1 1/2	○	—	○	○	○	○	25
50	2	○	○	○	○	○	○	34
65	2 1/2	○	○	○	○	○	○	51
80	3	○	○	○	○	○	○	70
100	4	○	○	○	○	○	○	91
125	5	○	○	○	○	○	○	118
150	6	○	○	○	○	○	○	144
200	8	○	○	○	○	○	○	194
250	10	○	○	○	○	○	○	246
300	12	○	○	○	○	○	○	295

Remark 1: The symbols above mean the following.
○: Piping possible —: Not standardized
Remark 2: Butterfly valves are inserted into a pipe that was fitted with the disc when fully open.
In cases where you are using a pipe or flange that is less than the minimum inner pipe diameter, use is still possible if means are taken such as inserting a spacer between the valve and flange.
For details, please consult us.

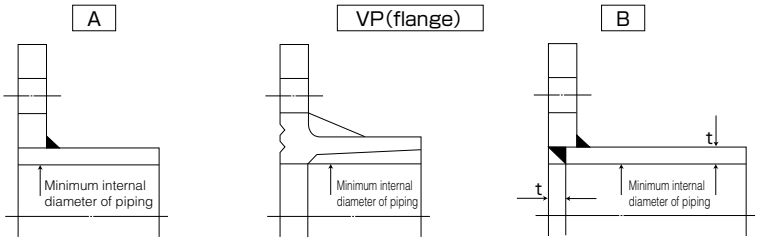

700Z Piping bolt and nut sizes

■Hexagon bolt & nut

Nominal size		JIS 5K	JIS 10K
mm	inch	Hexagon bolts and nuts	Hexagon bolts and nuts
40	1 1/2	4-M12× 75×30	4-M16× 90×38
50	2	4-M12× 90×30	4-M16×100×38
65	2 1/2	4-M12× 90×30	4-M16×105×38
80	3	4-M16× 95×38	8-M16×105×38
100	4	8-M16×105×38	8-M16×110×38
125	5	8-M16×110×38	8-M20×125×46
150	6	8-M16×115×38	8-M20×130×52
200	8	8-M20×130×52	12-M20×130×52
250	10	12-M20×140×52	12-M22×150×60
300	12	12-M20×150×52	16-M22×160×60

■Long bolt & nut

Nominal size		JIS 5K	JIS 10K	ANSI 125Lb/150Lb
mm	inch	Long bolts and nuts	Long bolts and nuts	Long bolts and nuts
40	1 1/2	4-M12× 95×25	4-M16×110×25	4-U1/2 ×110×32
50	2	4-M12×105×25	4-M16×120×30	4-U5/8 ×140×38
65	2 1/2	4-M12×110×25	4-M16×125×30	4-U5/8 ×140×38
80	3	4-M16×120×30	8-M16×125×30	4-U5/8 ×140×38
100	4	8-M16×130×30	8-M16×130×30	8-U5/8 ×150×38
125	5	8-M16×130×30	8-M20×150×40	8-U3/4 ×160×51
150	6	8-M16×140×35	8-M20×155×40	8-U3/4 ×165×51
200	8	8-M20×155×40	12-M20×155×40	8-U3/4 ×175×51
250	10	12-M20×165×40	12-M22×175×45	12-U7/8 ×195×58
300	12	12-M20×175×40	16-M22×185×45	12-U7/8 ×205×58

Remark: Please use a hexagon nut with 80% threading. (For ANSI, use heavy nut.)

Example

Long bolts : 12 - M22 × 185 × 45
(12: N, M22: M, 185: L, 45: S)

Hexagon bolts : 12 - M22 × 60 × 50
(12: N, M22: M, 60: L, 50: S)

Hexagon bolts and nuts

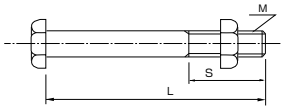

Long bolts and nuts (full thread)

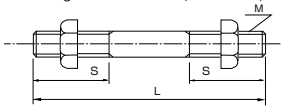

MEMO



700G Wafer

704G Full lugged

705G Semi lugged





Features and Benefits

Rib disc

The 316 stainless steel (JIS SCS14) rib disc comes standard from 50mm to 300mm. Thin profile disc reinforced by ribs (patent pending) provides larger Cv compared to our conventional design. It also reduces weight while maintaining mechanical strength. A flat face disc is also available on request.

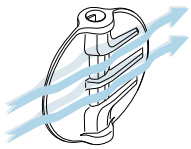

Patented cosine curve seat ring

The cosine curve seat ring reduces valve operating torque substantially and allows the torque to be adjusted according to the working pressure.

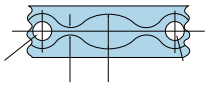

Much longer life with spherical design

Similar to a spherical body rotating inside a spherical area, the operation of the disc is smooth and unhindered. Torque is reduced and the valve life is lengthened by 300%.



Self-aligning stem seal through backup ring

The stem seal is the primary and secondary seal system. The backup ring functions as the self-aligning stem seal.

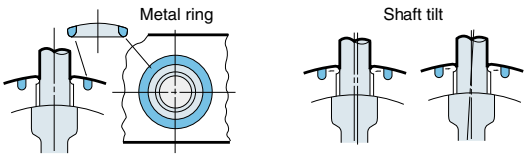

Long bonnet

The long neck shape allows insulation of up to 50mm after the valve is installed. 701G: Nylon coated body is also available (50 to 300mm).
Please contact us for more information.

Two aligning methods (350 to 600mm)

Two valve models are available: the casted hole type (700G) and the tapped and drilled hole type (705G). They accommodate all the applicable flange standards.

Discs and seats come in various materials to meet a wide range of needs. These are the ultimate general purpose valves and they provide excellent cost performance.

General Description

Handling, durability and longevity are the basic aspects by which valve performance can be improved. TOMOE have now developed the 700G series, a superior, pressure-proof, general purpose valve, with the addition of a wide range of features to offer improved performance and better cost efficiency.
The 700G series is designed to satisfy many international flange standards for use worldwide.

Structure

The body is available in various designs such as wafer, semi-lugged and full-lugged, with various materials such as ductile iron, carbon steel, etc. The disc is also available with high-grade stainless steel, type 316, nylon coating, aluminium, bronze or PPS. The patented cosine-curve structure is adopted for the seat ring. The 700G series is superior to conventional models in all respects.

Standard Specifications

Model		700G (Wafer)			704G (Fully lugged)		705G (Semi lugged)	
Valve nominal size		40 to 300mm	350 to 500mm	600mm	50 to 300mm	350 to 600mm	50 to 300mm	350 to 600mm
Applicable flange standard		JIS 5K/10K ANSI 125lb/150 lb DIN NP10, NP16 BS 4504 PN10, PN16, BS 10 'E'	JIS 5K/10K	JIS 5K, ANSI 125 lb/150 lb, DIN NP10, BS4504 PN10, (excluding JIS 10K)	JIS 5K/10K, ANSI 125lb/150lb, DIN NP10, NP16, BS 4504 PN10/PN16		JIS 5K/10K, ANSI 125lb/150lb, DIN NP10, NP16, BS 4504 PN10, PN16, BS10 'E'	JIS 5K/10K, ANSI 125lb/150lb, DIN NP10, BS 4504 PN10, PN16, BS10 'E'
Face-to-face dimensions		API 609 / ISO 5752 (20 series)						
Max. working pressure		1.0 MPa						
Body shell test (hydraulic)		1.5 MPa						
Seat leak test (pneumatic) ※1		1.1 MPa						
Working temperature range ※2,※3		NBR : -10 to 80 degrees C, *EPDM : -20 to 120 degrees C						
Working temperature in continuous use ※4		NBR : 0 to 60 degrees C, *EPDM : 0 to 70 degrees C						
Standard materials	Body ※5	Ductile iron, JIS FCD450	Cast iron, JIS FC 250		Ductile iron, JIS FCD450		Ductile iron, JIS FCD 450	Cast iron, JIS FC250, Ductile iron, JIS FCD450
	Disc	316 stainless steel, JIS SCS14 ※6	304 stainless steel, JIS SCS13 316 stainless steel, JIS SCS14		316 stainless steel, JIS SCS14 ※6	304 stainless steel, JIS SCS 13, 316 stainless steel, JIS SCS14	316 stainless steel, JIS SCS 14 ※6	304 stainless steel, JIS SCS 13, 316 stainless steel, JIS SCS 14
		PPS (50 to 200mm) Aluminium bronze JIS CAC702 (50 to 600mm)	Aluminium bronze JIS CAC702		PPS (50 to 200mm) Aluminium bronze JIS CAC702 (50 to 600mm)	Aluminium bronze JIS CAC702	PPS (50 to 200mm) Aluminium bronze JIS CAC702 (50 to 600mm)	Aluminium bronze JIS CAC702
		Ductile iron, JIS FCD 450	Ductile iron, JIS FCD 450 with hard chrome plating		Ductile iron, JIS FCD 450	Ductile iron, JIS FCD 450 with hard chrome plating	Ductile iron, JIS FCD 450	Ductile iron, JIS FCD 450 with hard chrome plating
	Stem	SUS420J2 / SUS 392 J1						
	Seat ring ※7	NBR, *EPDM ※7						
Actuators	Lock lever	40 to 200mm	-		50 to 200mm	-	50 to 200mm	-
	Worm gear	40 to 300mm	350 to 600mm		50 to 300mm	350 to 600mm	50 to 300mm	350 to 600mm
	Centre handle	40 to 300mm	-		50 to 300mm	-	50 to 300mm	-
	Pneumatic	40 to 300mm	350 to 600mm		50 to 300mm	350 to 600mm	50 to 300mm	350 to 600mm
	Motorised	40 to 300mm	350 to 600mm		50 to 300mm	350 to 600mm	50 to 300mm	350 to 600mm
Coating ※8		Epoxy primer finish (Munsell N7)						

※1 16bar finish is also available subject to working conditions.
※2 Working temperature range varies depending on combination of disc materials and seating. Please consult us.
※3 Please consult us when using NBR and EPDM seatring continuously above 60 degrees C and 70 degrees C respectively.
※4 "Working temperature in continuous use" stands for the temperature continuously kept exceeding one hour.
※5 Cast steel body or stainless steel body is also available.
※6 Rib disc: standard. Flat face disc: optional.
※7 Heat resistant EPDM (to 150 degrees C), FPM, SEP, CR and white-NBR seats are also available. See below table.
※8 Polyester powder backed finish (V-Pet #4000) for 700G size 40 to 300mm. Epoxy resin coating for 705G size 50 to 300mm.
* Never use an EPDM rubber seat ring if the valve is being used for oil or for a fluid containing even a slight amount of oil.

Seat ring material table

	Standard		On request				
Material	EPDM	NBR	Heat resistant EPDM	W-NBR	FKM	CR	SEP
Working temperature range (degrees C)	−20～120	−10～80	−10～150	−10～70	−10～60	−10～80	−10～60
Working temperature in continuous use (degrees C)	0～70	0～60	0～130	0～60	0～50	0～60	0～50
Max. working pressure (MPa)	1.0	1.0	0.5	0.5	0.5	1.0	0.5

700G Expanded view of components

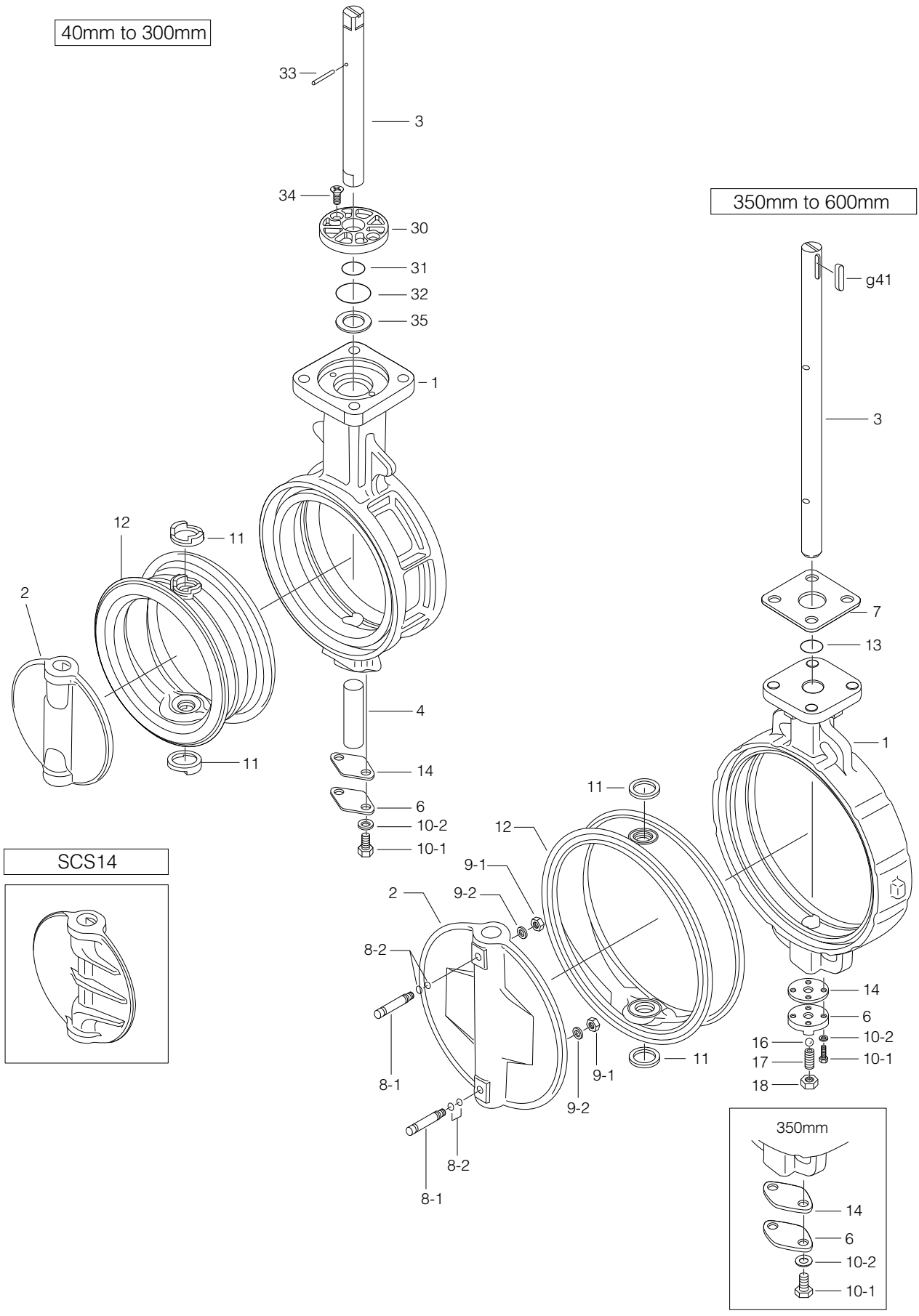

■700G Parts list (40mm to 300mm)

No.	Description	Q'ty	Remarks
1	Body	1	
2	Disc	1	
3	Upper stem	1	
4	Lower stem	1	See Remark 2.
6	Bottom cover	1	
10-1	Hexagon bolt	2	
10-2	Spring washer	2	
★ 11	Secondary ring	2	Only 50mm to 300mm
★ 12	Seat ring	1	
★ 14	Gasket	1	
★ 30	Bushing	1	
★ 31	O-ring	1	
★ 32	O-ring	1	
33	Spring pin	1	
34	Machine screw	2	
35	Plate	1	

■700G Parts list (350mm to 600mm)

No.	Description	Q'ty	Remarks
1	Body	1	
2	Disc	1	
3	Stem	1	
6	Bottom cover	1	
7	Retainer plate	1	
★ 8-1	Taper bolt	2	
★ 8-2	O-ring	4	
★ 9-1	Hexagon nut	2	
★ 9-2	Spring washer	2	
10-1	Hexagon bolt	2	350mm
		4	400mm to 600mm
10-2	Spring washer	2	350mm
		4	400mm to 600mm
★ 11	Secondary ring	2	350mm
11	Secondary ring	2	400mm to 600mm
★ 12	Seat ring	1	
★ 13	O-ring	1	
★ 14	Gasket	1	
16	Ball	1	Only 400mm to 600mm
17	Hollow bolt	1	Only 400mm to 600mm
18	Lock nut	1	Only 400mm to 600mm
g41	Key	1	

Remark 1: The ★ indicates recommended spare parts. They are supplied as "Seat ring set" with a small hexagonal spanner to remove hollow bolt.
Remark 2: When the disc material is PPS, the lower stem length of types 50mm to 100mm is different from standard.

704G Expanded View of Components

50mm to 300mm

50mm,65mm,80mm (JIS 5K)

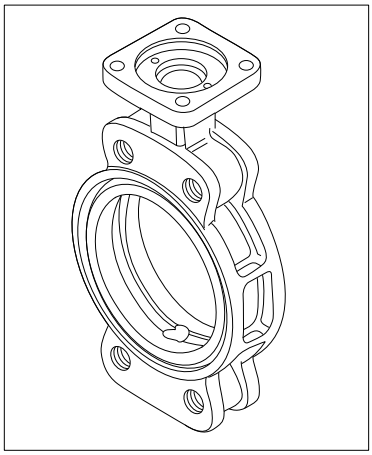

350mm to 600mm

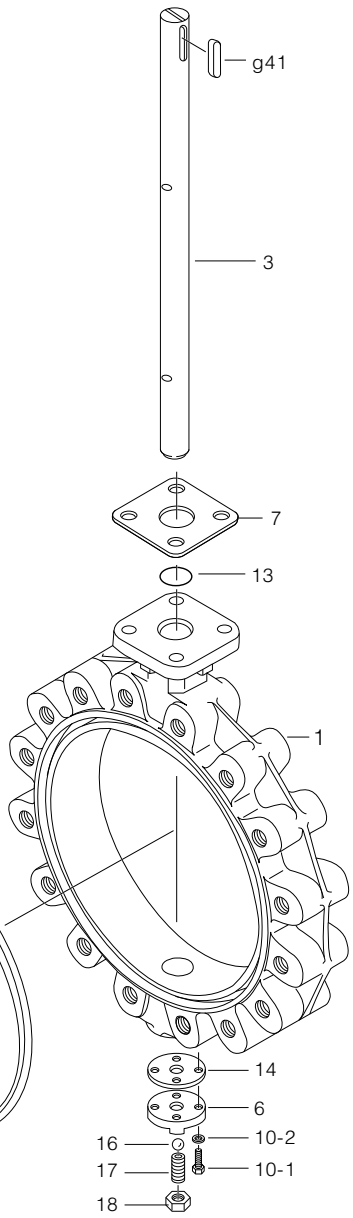

SCS14

350mm

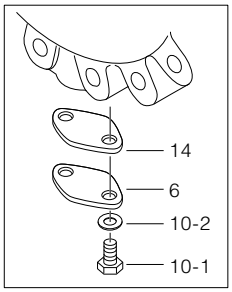

■704G Parts list (50mm to 300mm)

No.	Description	Q'ty	Remarks
1	Body	1	
2	Disc	1	
3	Upper stem	1	
4	Lower stem	1	See Remark 2.
6	Bottom cover	1	
10-1	Hexagon bolt	2	
10-2	Spring washer	2	
★ 11	Secondary ring	2	
★ 12	Seat ring	1	
★ 14	Gasket	1	
★ 30	Bushing	1	
★ 31	O-ring	1	
★ 32	O-ring	1	
33	Spring pin	1	
34	Machine screw	2	
35	Plate	1	

■704G Parts list (350mm to 600mm)

No.	Description	Q'ty	Remarks
1	Body	1	
2	Disc	1	
3	Stem	1	
6	Bottom cover	1	
7	Retainer plate	1	
★ 8-1	Taper bolt	2	
★ 8-2	O-ring	4	
★ 9-1	Hexagon nut	2	
★ 9-2	Spring washer	2	
10-1	Hexagon bolt	2	350mm
		4	400mm to 600mm
10-2	Spring washer	2	350mm
		4	400mm to 600mm
★ 11	Secondary ring	2	350mm
11	Secondary ring	2	400mm to 600mm
★ 12	Seat ring	1	
★ 13	O-ring	1	
★ 14	Gasket	1	
16	Ball	1	Only 400mm to 600mm
17	Hollow bolt	1	Only 400mm to 600mm
18	Lock nut	1	Only 400mm to 600mm
g41	Key	1	

Remark 1: The ★ indicates recommended spare parts. They are supplied as "Seat ring set" with a small hexagonal spanner to remove hollow bolt.
Remark 2: When the disc material is PPS, the lower stem length of types 50mm to 100mm is different from standard.

705G Expanded view of components

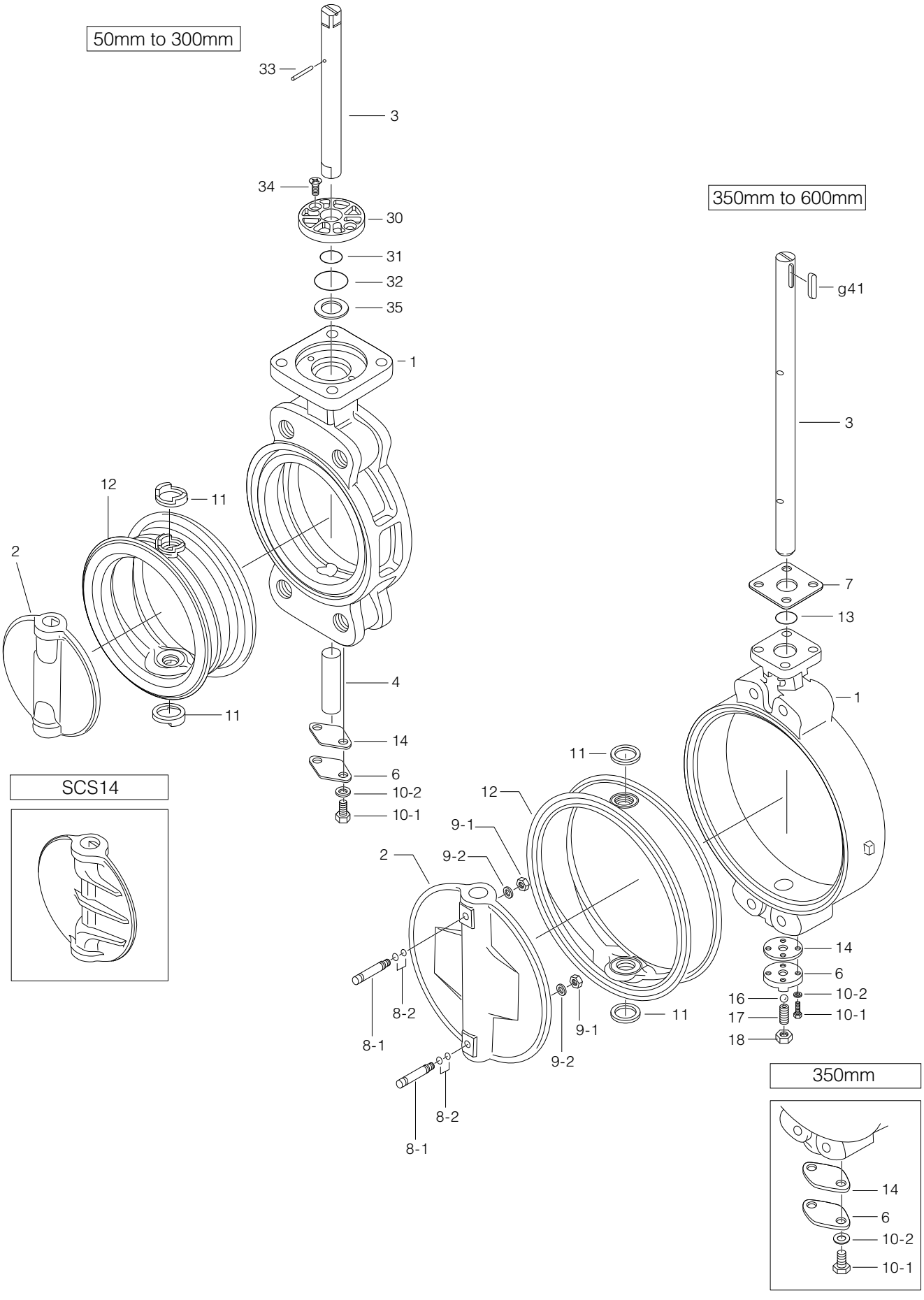

■705G Parts list (50mm to 300mm)

No.	Description	Q'ty	Remarks
1	Body	1	
2	Disc	1	
3	Upper stem	1	
4	Lower stem	1	See Remark 2.
6	Bottom cover	1	
10-1	Hexagon bolt	2	
10-2	Spring washer	2	
★ 11	Secondary ring	2	
★ 12	Seat ring	1	
★ 14	Gasket	1	
★ 30	Bushing	1	
★ 31	O-ring	1	
★ 32	O-ring	1	
33	Spring pin	1	
34	Machine screw	2	
35	Plate	1	

■705G Parts list (350mm to 600mm)

No.	Description	Q'ty	Remarks
1	Body	1	
2	Disc	1	
3	Stem	1	
6	Bottom cover	1	
7	Retainer plate	1	
★ 8-1	Taper bolt	2	
★ 8-2	O-ring	4	
★ 9-1	Hexagon nut	2	
★ 9-2	Spring washer	2	
10-1	Hexagon bolt	2	350mm
		4	400mm to 600mm
10-2	Spring washer	2	350mm
		4	400mm to 600mm
★ 11	Secondary ring	2	350mm
11	Secondary ring	2	400mm to 600mm
★ 12	Seat ring	1	
★ 13	O-ring	1	
★ 14	Gasket	1	
16	Ball	1	Only 400mm to 600mm
17	Hollow bolt	1	Only 400mm to 600mm
18	Lock nut	1	Only 400mm to 600mm
g41	Key	1	

Remark 1: The ★ indicates recommended spare parts. They are supplied as "Seat ring set" with a small hexagonal spanner to remove hollow bolt.
Remark 2: When the disc material is PPS, the lower stem length of types 50mm to 100mm is different from standard.

700G / 704G / 705G Actuator Selection Chart

■700G

Model	Category	Size (mm / inch)													
		40	50	65	80	100	125	150	200	250	300	350	400	450	500	600
		1 1/2	2	2 1/2	3	4	5	6	8	10	12	14	16	18	20	24
1T	Standard / Heavy duty	1T-1					1T-2		1T-3							
2U	Standard / Heavy duty	2U-0			2U-1		2U-2		2U-3		2U-4		2U-5			2U-6
2G,2R	Standard / Heavy duty	2G-1					2G-2		2G-3		2G-4		2R-3			2R-4
7E,3A	Standard / Heavy duty	T35			T85			T200	T380		T750	TGA-125 / TGA-125	TGA-140 / TGA-140	TGA-160		TGA-180 / TGA-200
7G,7F 3U,3K	Standard / Heavy duty	T85S		T200S			T380S	T750S	T750S / TG-10S		TG-12S		TG-14S			TG-20S
4 I ※	ON-OFF Control	4 I-00			4 I-0		4 I-1		4 I-2		4 I-2.5		4 I-3			4 I-4
4J,4L	Standard / Heavy duty	SRJ-010					SRJ-020		SRJ-060			LTKD-01 0.2kW /MGH-3		LTKD-01 0.4kW /MGH-3		LTKD-05 0.75kW /MGH-4

Remark※: For 400mm with the accessories below, type 4I-4 should be selected.
- Micom unit
- Servo unit
- Speed control unit
- Potentiometer

Selection criteria		
	Standard	Select when none of the following heavy duty items apply.
	Heavy duty	Select when any of the following items apply. ①Powder or high viscosity fluid (crude oil, etc.) ②Control specification (with positioner) ③Emergency open valve or pipe dead end valve

700G / 704G / 705G Pressure-Temperature Rating

In case of EPDM seatring

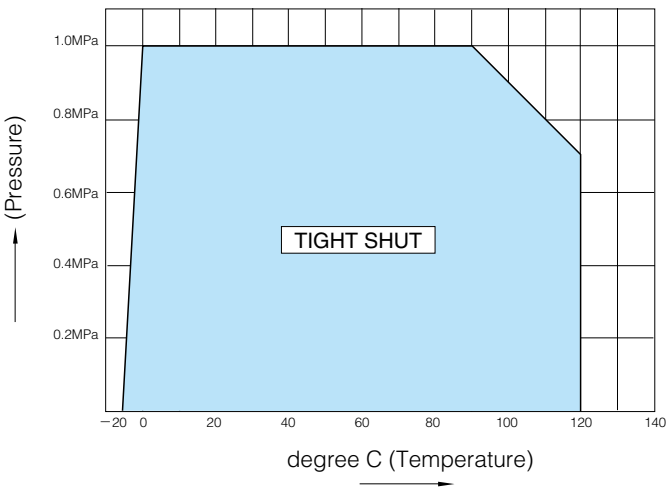

In case of NBR seatring

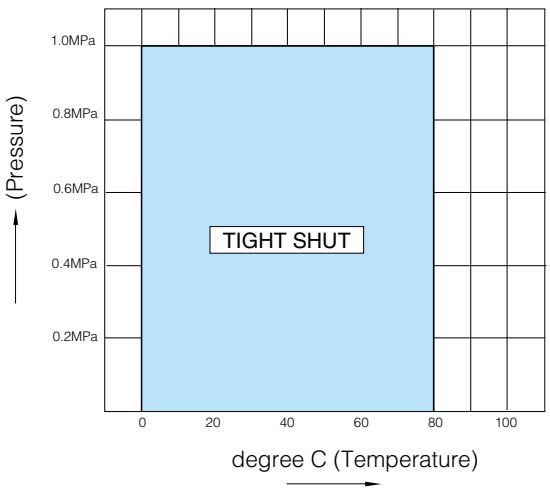

700G（Wafer）

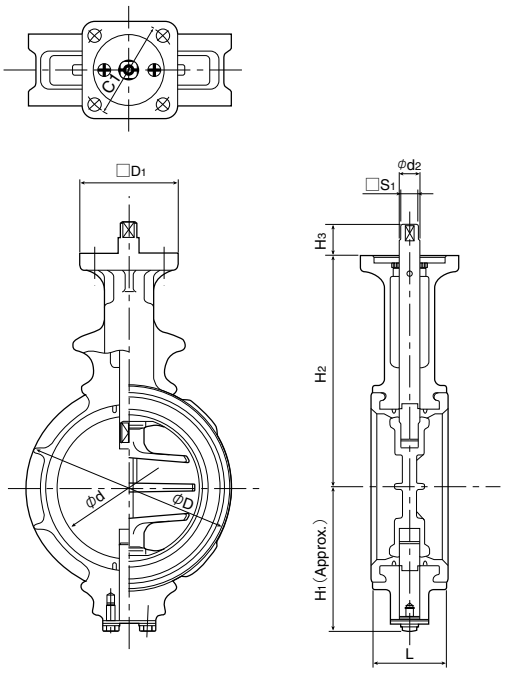

40 to 300mm

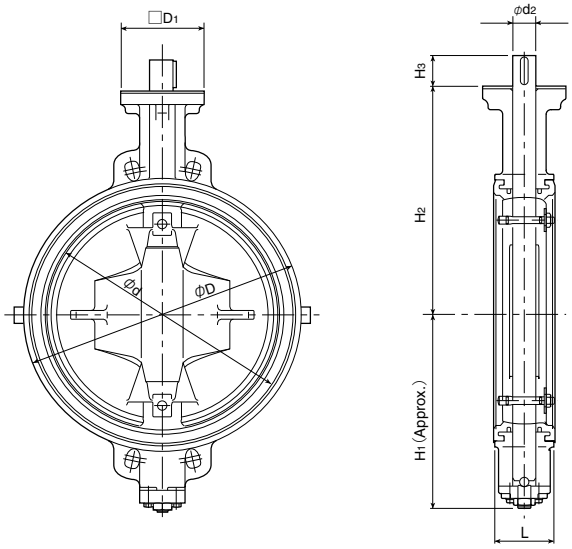

350 to 600mm

■Dimensions

Nominal size		Dimension (mm)										Approx. Mass (kg)
mm	inch	φd	φD	□S1	□D1	φC1	L	φd2	H1	H2	H3	
40	1 1/2	45	80	8	70	70	35	10	61	132	21.5	1.5
50	2	56	90	8	70	70	43	10	68	138	21.5	1.8
65	2 1/2	69	115	8	70	70	46	10	79	151	21.5	2.5
80	3	84	126	10	70	70	46	12	86	156	22.5	2.6
100	4	104	146	12	70	70	52	14	103	167	22.5	3.4
125	5	130	181	14	102	102	56	16	118	191	27.5	5.4
150	6	153.5	211	14	102	102	56	18	135	202	27.5	7
200	8	199	256	18	102	102	60	22	177	227	30	10.4
250	10	253	322	24	102	102	68	28	215	280	35	18
300	12	302	367	24	125	125	78	32	253	312	35	25
350	14	337	410	—	140	140	78	32	276	348	48	42
400	16	394	469	—	140	140	102	40	338	383	54	64
450	18	441	525	—	140	140	114	46	368	413	65	87
500	20	492	580	—	140	140	127	50	403	453	79	114
600	24	584	682	—	165	165	154	55	458	528	79	191

704G Bare shaft (01: 50mm to 300mm, 02: 350mm to 600mm)

704G (Full-lugged)

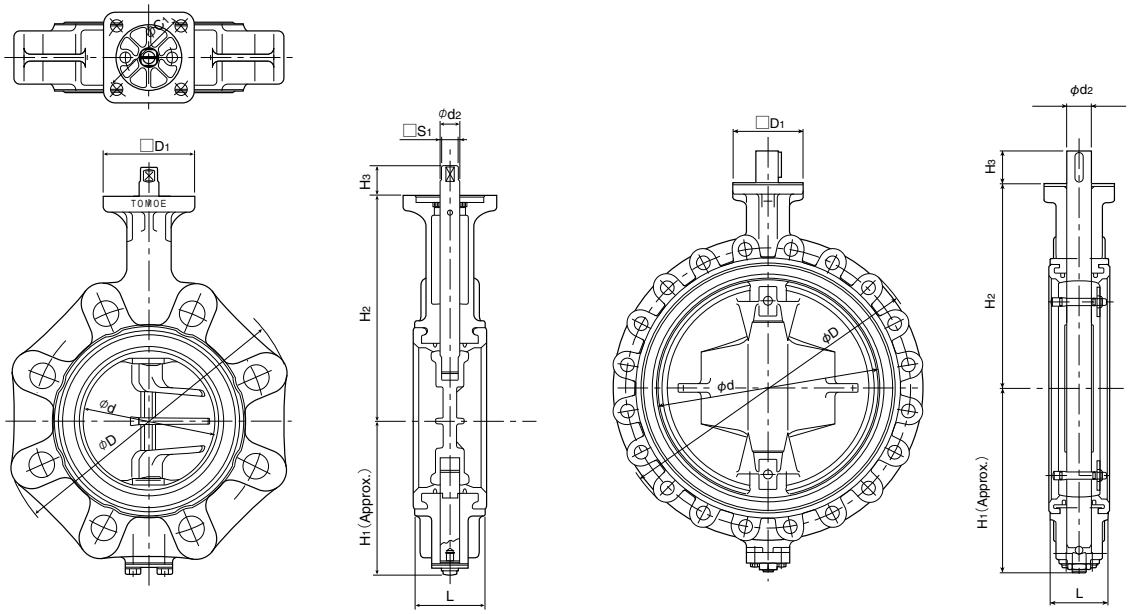

■Dimensions

	Nominal size		Dimension (mm)										Approx. Mass (kg)
	mm	inch	φd	φD	□S1	□D1	φC1	L	φd2	H1	H2	H3	
*	50	2	56	90	8	70	70	43	10	85	138	21.5	2.5
	65	2 1/2	69	115	8	70	70	46	10	94	151	21.5	3.5
	80	3	84	126	10	70	70	46	12	109	156	22.5	4
	80	3	84	190	10	70	70	46	12	109	156	22.5	4.8
	100	4	104	223	12	70	70	52	14	117	167	22.5	6.7
	125	5	130	250	14	102	102	56	16	143	191	27.5	8.8
	150	6	153.5	276	14	102	102	56	18	164	202	27.5	10.4
	200	8	199	334	18	102	102	60	22	176	227	30	16.3
	250	10	253	402	24	102	102	68	28	215	280	35	27
※	300	12	302	483 472	24	125	125	78	32	253	312	35	39
*	350	14	337	505 533	—	140	140	78	32	276	348	48	66
	400	16	394	579	—	140	140	102	40	338	383	54	107
※	450	18	441	526	—	140	140	114	46	368	413	65	128
	500	20	492	634 696	—	140	140	127	50	403	453	79	170
	600	24	584	820	—	165	165	154	55	458	528	79	275
*	600	24	584	795	—	165	165	154	55	458	528	79	269

In Case JIS10K: *
In Case JIS10K or DIN PN10: ※

705G (Semi-lugged)

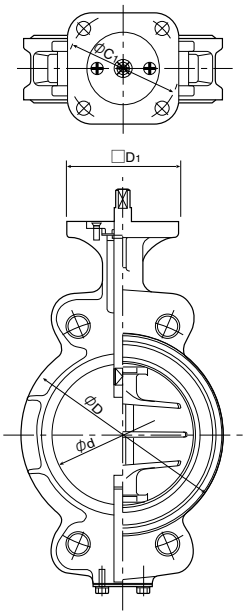

50 to 300mm

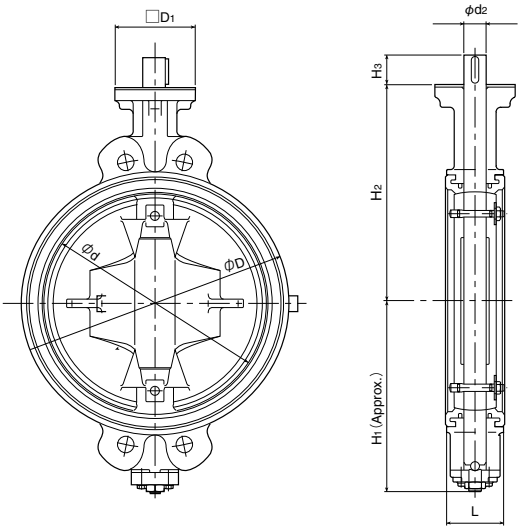

350 to 600mm

■Dimensions

Nominal size		Dimension (mm)										Approx. Mass (kg)
mm	inch	φd	φD	□S1	□D1	φC1	L	φd2	H1	H2	H3	
50	2	56	90	8	70	70	43	10	85	138	21.5	2.5
65	2 1/2	69	115	8	70	70	46	10	94	151	21.5	3.5
80	3	84	126	10	70	70	46	12	109	156	22.5	4
100	4	104	146	12	70	70	52	14	117	167	22.5	5
125	5	130	181	14	102	102	56	16	143	191	22.5	8
150	6	153.5	211	14	102	102	56	18	164	202	27.5	11
200	8	199	256	18	102	102	60	22	186	227	30	15
250	10	253	322	24	102	102	68	28	215	280	35	24
300	12	302	367	24	125	125	78	32	253	312	35	31
350	14	337	410	—	140	140	78	32	276	348	48	47
400	16	394	469	—	140	140	102	40	338	383	54	72
450	18	441	525	—	140	140	114	46	368	413	65	96
500	20	492	580	—	140	140	127	50	403	453	79	127
600	24	584	682	—	165	165	154	55	458	528	79	191

Lock lever type 700G-1T（40mm to 200mm）

Nominal size		Dimension (mm)							Lever type	Approx.Mass (kg)
mm	inch	φd	φD	L	H_1	H_2	H_3	W		
40	1 1/2	45	80	35	61	132	66	200	1T-1	2.1
50	2	56	90	43	68	138	66	200	1T-1	2.4
65	2 1/2	69	115	46	79	151	66	200	1T-1	3.1
80	3	84	126	46	86	156	66	200	1T-1	3.2
100	4	104	146	52	103	167	66	200	1T-1	4
125	5	130	181	56	118	191	92	300	1T-2	6.7
150	6	153.5	211	56	135	202	92	300	1T-2	8.3
200	8	199	256	60	177	227	97	350	1T-3	12.1

■700G-1T

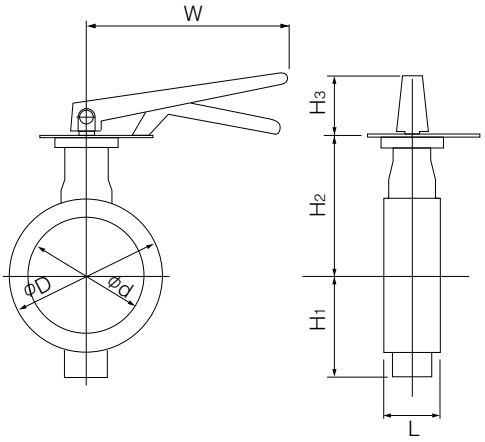

■1T Installation direction

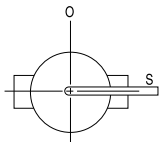	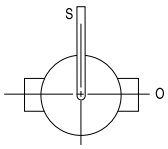	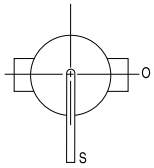	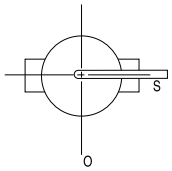
1TLS (standard)	1TLR	1TRS	1TRR
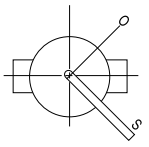	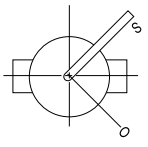	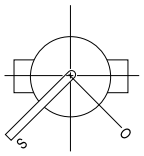	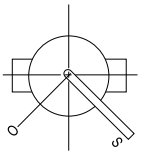
1TXS	1TXR	1TVS	1TVR

Worm gear type 700G-2U（40mm to 600mm）

Nominal size		Dimension (mm)										Gear type	Approx. Mass (kg)
mm	inch	φd	φD	L	H_1	H_2	H_3	E	K	F	W		
40	1 1/2	45	80	35	61	132	29.5	36	46	160	100	2U-0	3.8
50	2	56	90	43	68	138	29.5	36	46	160	100	2U-0	4.1
65	2 1/2	69	115	46	79	151	29.5	36	46	160	100	2U-0	4.8
80	3	84	126	46	86	156	29.5	36	46	160	100	2U-1	4.9
100	4	104	146	52	103	167	29.5	36	46	160	100	2U-1	5.7
125	5	130	181	56	118	191	34.5	44	53	173.5	160	2U-2	9.6
150	6	153.5	211	56	135	202	34.5	44	53	173.5	160	2U-2	11.2
200	8	199	256	60	177	227	41.5	67	75	198	200	2U-3	18
250	10	253	322	68	215	280	41.5	67	75	198	200	2U-3	26
300	12	302	367	78	253	312	48	87.5	90	222.5	200	2U-4	39
350	14	337	410	78	276	348	48	87.5	90	222.5	280	2U-4	58
400	16	394	469	102	338	383	50	90	105	266	280	2U-5	80
450	18	441	525	114	368	413	50	90	105	266	280	2U-5	103
500	20	492	580	127	403	453	50	90	105	266	280	2U-5	130
600	24	584	682	154	458	528	61	113	140	352	400	2U-6	222

■700G-2U

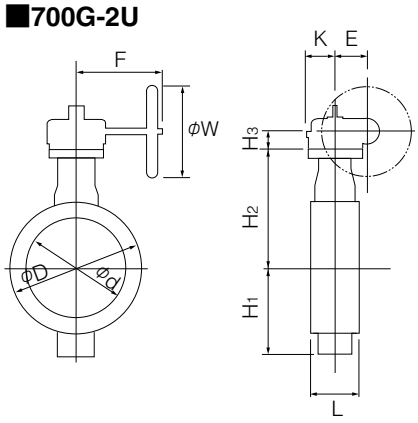

■2U Installation direction

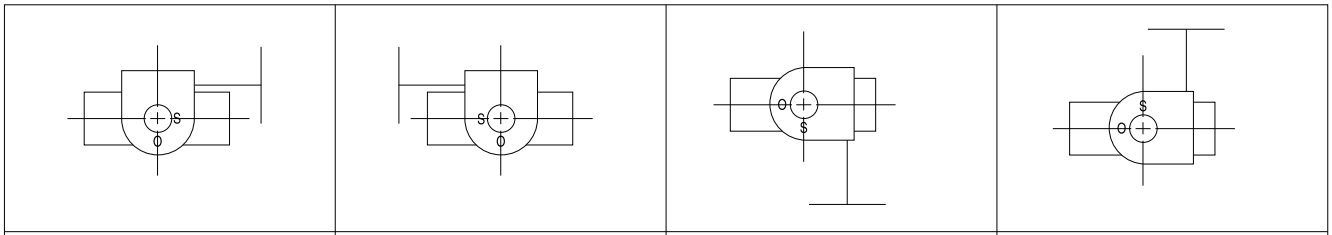

2UA (standard)	2UAR	2UB	2UBR

Center handle type 700G-2G (40mm to 300mm) / 700G-2R (350mm to 600mm)

Nominal size		Dimension (mm)							Center handle type	Approx. Mass (kg)
mm	inch	φd	φD	L	H_1	H_2	H_3	W		
40	1 1/2	45	80	35	61	132	136	100	2G-1	4.4
50	2	56	90	43	68	138	136	100	2G-1	4.7
65	2 1/2	69	115	46	79	151	136	100	2G-1	5.4
80	3	84	126	46	86	156	136	100	2G-1	5.5
100	4	104	146	52	103	167	136	100	2G-1	6.3
125	5	130	181	56	118	191	133	100	2G-2	9.2
150	6	153.5	211	56	135	202	133	100	2G-2	10.8
200	8	199	256	60	177	227	151	200	2G-3	17.5
250	10	253	322	68	215	280	151	200	2G-3	25.1
300	12	302	367	78	253	312	161	200	2G-4	32.1
350	14	337	410	78	276	348	409	355	2R-3	75
400	16	394	469	102	338	383	409	355	2R-3	97
450	18	441	525	114	368	413	409	355	2R-3	121
500	20	492	580	127	403	453	409	355	2R-3	148
600	24	584	682	154	458	528	498	450	2R-4	244

■700G-2G/2R

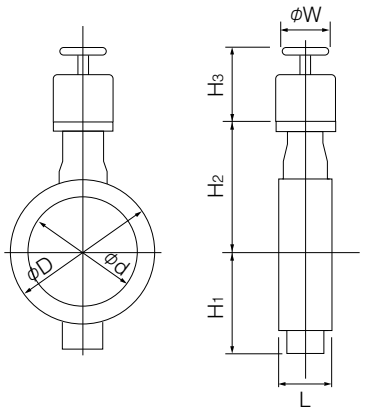

Double-acting pneumatic cylinder type 700G-7E（40mm to 350mm）

■Standard

Nominal size		Dimension (mm)										Center handle type	Approx. Mass (kg)
mm	inch	φd	φD	L	H_1	H_2	H_3	A	P	f_1	f_2		
40	1 1/2	45	80	35	61	132	125	228	116	57	29	T35	4
50	2	56	90	43	68	138	125	228	116	57	29	T35	4
65	2 1/2	69	115	46	79	151	125	228	116	57	29	T35	5
80	3	84	126	46	86	156	168	276	142	75	47	T85	8
100	4	104	146	52	103	167	168	276	142	75	47	T85	8
125	5	130	181	56	118	191	168	276	142	75	47	T85	10
150	6	153.5	211	56	135	202	203	346	176	79	57	T200	15
200	8	199	256	60	177	227	231	423	214	91	69	T380	25
250	10	253	322	68	215	280	231	423	214	91	69	T380	32
300	12	302	367	78	253	312	269	546	270	118	85	T750	49
350	14	337	410	78	276	348	269	546	270	118	85	T750	74

■Heavy duty

Nominal size		Dimension (mm)										Center handle type	Approx. Mass (kg)
mm	inch	φd	φD	L	H_1	H_2	H_3	A	P	f_1	f_2		
40	1 1/2	45	80	35	61	132	125	228	116	57	29	T35	4
50	2	56	90	43	68	138	125	228	116	57	29	T35	4
65	2 1/2	69	115	46	79	151	125	228	116	57	29	T35	5
80	3	84	126	46	86	156	168	276	142	75	47	T85	8
100	4	104	146	52	103	167	203	346	176	79	57	T200	12
125	5	130	181	56	118	191	203	346	176	79	57	T200	14
150	6	153.5	211	56	135	202	203	346	176	79	57	T200	15
200	8	199	256	60	177	227	231	423	214	91	69	T380	25
250	10	253	322	68	215	280	231	423	214	91	69	T380	32
300	12	302	367	78	253	312	269	546	270	118	85	T750	49

Selection criteria		
	Standard	Select when none of the following heavy duty items apply.
	Heavy duty	Select when any of the following items apply. ①Powder or high viscosity fluid (crude oil, etc.) ②Control specification (with positioner) ③Emergency open valve or pipe dead end valve ④Air or Gas

■700G-7E

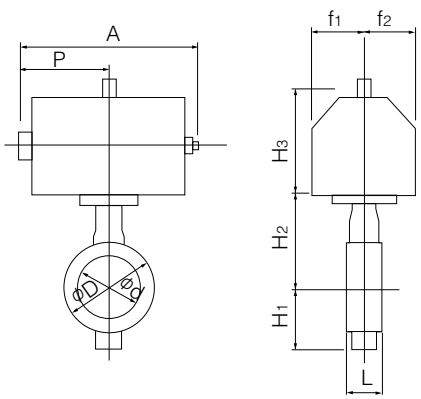

■7E Installation direction

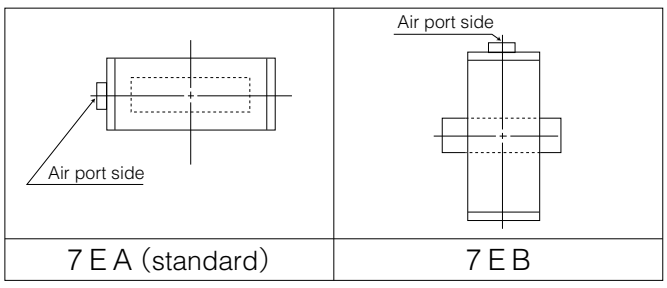

7 E A (standard)	7 E B

Double-acting pneumatic cylinder type 700G-3A (350mm to 600mm)

■Standard

Nominal size		Dimension (mm)										Cylinder type	Approx. Mass (kg)
mm	inch	φd	φD	L	H_1	H_2	H_3	A	P	f_1	f_2		
400	16	394	469	102	338	383	364	743	381	100	164	TGA-125	101
450	18	441	525	114	368	413	412	810	417	100	180	TGA-140	138
500	20	492	580	127	403	453	465	939	483	130	202	TGA-160	204
600	24	584	682	154	458	528	478	1053	543	218	69	TGA-180	330

■Heavy duty

Nominal size		Dimension (mm)										Cylinder type	Approx. Mass (kg)
mm	inch	φd	φD	L	H_1	H_2	H_3	A	P	f_1	f_2		
350	14	337	410	78	276	348	364	743	381	100	164	TGA-125	80
400	16	394	469	102	338	383	412	810	417	100	180	TGA-140	116
450	18	441	525	114	368	413	465	939	483	130	202	TGA-160	188
500	20	492	580	127	403	453	465	939	483	130	202	TGA-160	204
600	24	584	682	154	458	528	525	1163	599	160	253	TGA-200	390

Selection criteria		
	Standard	Select when none of the following heavy duty items apply.
	Heavy duty	Select when any of the following items apply. ①Powder or high viscosity fluid (crude oil, etc.) ②Control specification (with positioner) ③Emergency open valve or pipe dead end valve ④Air or Gas

■700G-3A

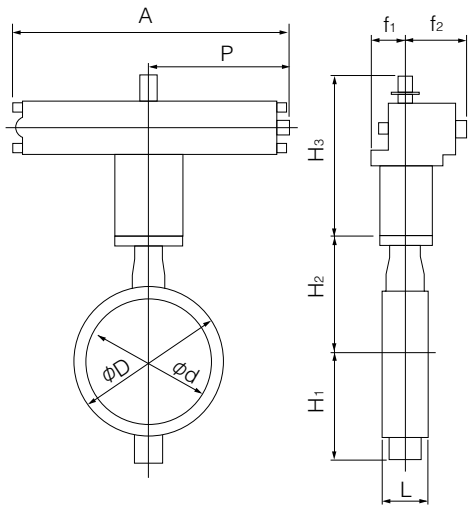

■3A Installation direction

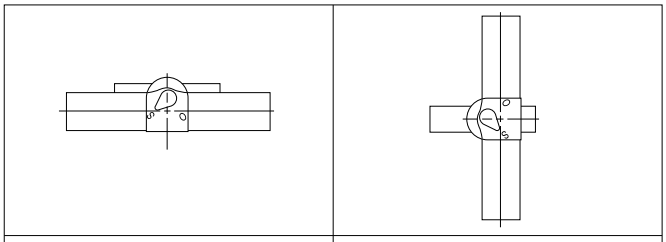

3 A A (standard)	3 A B

■Standard

Nominal size		Dimension (mm)										Cylinder type	Approx. Mass (kg)
mm	inch	φd	φD	L	H_1	H_2	H_3	A	P	f_1	f_2		
40	1 1/2	45	80	35	61	132	168	364	183	75	47	T85S	8
50	2	56	90	43	68	138	168	364	183	75	47	T85S	8
65	2 1/2	69	115	46	79	151	203	449	226	79	57	T200S	14
80	3	84	126	46	86	156	203	449	226	79	57	T200S	14
100	4	104	146	52	103	167	203	449	226	79	57	T200S	15
125	5	130	181	56	118	191	231	550	276	91	69	T380S	25
150	6	153.5	211	56	135	202	231	550	276	91	69	T380S	26
200	8	199	256	60	177	227	269	723	360	118	85	T750S	43
250	10	253	322	68	215	280	269	723	360	118	85	T750S	51

■Heavy duty

Nominal size		Dimension (mm)										Cylinder type	Approx. Mass (kg)
mm	inch	φd	φD	L	H_1	H_2	H_3	A	P	f_1	f_2		
40	1 1/2	45	80	35	61	132	168	364	183	75	47	T85S	8
50	2	56	90	43	68	138	168	364	183	75	47	T85S	8
65	2 1/2	69	115	46	79	151	203	449	226	79	57	T200S	14
80	3	84	126	46	86	156	203	449	226	79	57	T200S	14
100	4	104	146	52	103	167	231	550	276	91	69	T380S	23
125	5	130	181	56	118	191	231	550	276	91	69	T380S	25
150	6	153.5	211	56	135	202	269	723	360	118	85	T750S	40

Selection criteria		
	Standard	Select when none of the following heavy duty items apply.
	Heavy duty	Select when any of the following items apply. ①Powder or high viscosity fluid (crude oil, etc.) ②Control specification (with positioner) ③Emergency open valve or pipe dead end valve ④Air or Gas

■700G-7F

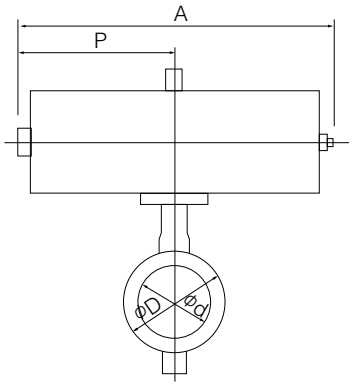

■700G-7G

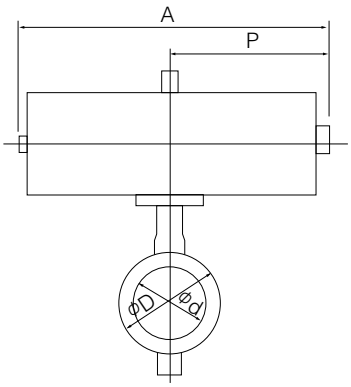

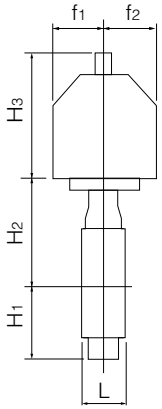

■7F Installation direction

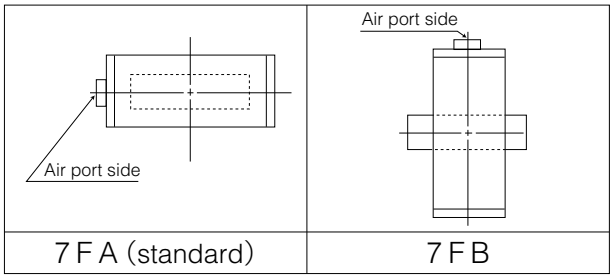

7 F A (standard)	7 F B

■7G Installation direction

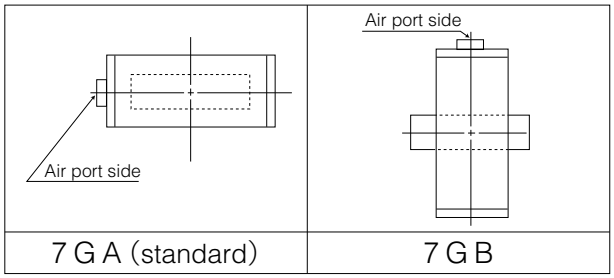

7 G A (standard)	7 G B

Single-acting pneumatic cylinder type 700G-3U (Air to open: 200mm to 600mm) / 700G-3K (Air to close: 200mm to 600mm)

■Standard

Nominal size		Dimension (mm)										Cylinder type	Approx. Mass (kg)
mm	inch	φd	φD	L	H1	H2	H3	A	P	f1	f2		
250	10	253	322	68	215	280	307	945	585	70	165	TG-10S	74
300	12	302	367	78	253	312	307	1080	720	94	206	TG-12S	126
350	14	337	410	78	276	348	307	1080	720	94	206	TG-12S	143
400	16	394	469	102	338	383	340	1255	865	131	257	TG-14S	262
450	18	441	525	114	368	413	340	1255	865	131	257	TG-14S	285
500	20	492	580	127	403	453	474	1655	1095	164	348	TG-20S	525
600	24	584	682	154	458	528	474	1655	1095	164	348	TG-20S	602

■Heavy duty

Nominal size		Dimension (mm)										Cylinder type	Approx. Mass (kg)
mm	inch	φd	φD	L	H1	H2	H3	A	P	f1	f2		
200	8	199	256	60	177	227	307	945	585	70	165	TG-10S	66
250	10	253	322	68	215	280	307	1080	720	94	206	TG-12S	119
300	12	302	367	78	253	312	307	1080	720	94	206	TG-12S	126
350	14	337	410	78	276	348	340	1255	865	131	257	TG-14S	239
400	16	394	469	102	338	383	340	1255	865	131	257	TG-14S	262
450	18	441	525	114	368	413	474	1655	1095	164	348	TG-20S	498
500	20	492	580	127	403	453	474	1655	1095	164	348	TG-20S	525
600	24	584	682	154	458	528	474	1655	1095	164	348	TG-20S	602

Selection criteria		
	Standard	Select when none of the following heavy duty items apply.
	Heavy duty	Select when any of the following items apply. ①Powder or high viscosity fluid (crude oil, etc.) ②Control specification (with positioner) ③Emergency open valve or pipe dead end valve ④Air or Gas

■700G-3U

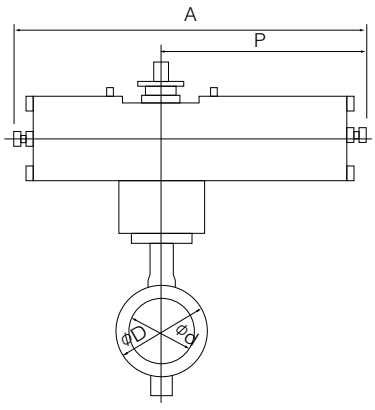

■700G-3K

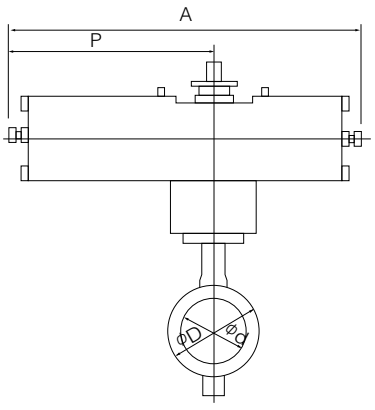

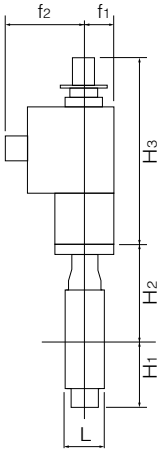

■3U Installation direction

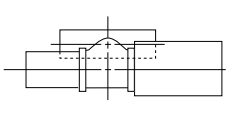	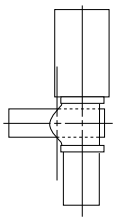
3UA (standard)	3UB

■3K Installation direction

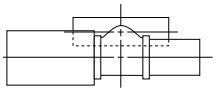	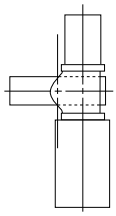
3KA (standard)	3KB

Single phase electric motor type 700G-4I (40mm to 500mm)

Nominal size		Dimension (mm)										Motor type	Approx. Mass (kg)
mm	inch	φd	φD	L	H_1	H_2	H_3	A	P	F	K		
40	1 1/2	45	80	35	61	132	120	161	84	58	45	4 I-00	4
							150	202	100	85	54	4 I-0	5.7
50	2	56	90	43	68	138	120	161	84	58	45	4 I-00	4.3
							150	202	100	85	54	4 I-0	6
65	2 1/2	69	115	46	79	151	150	202	100	85	54	4 I-0	6.7
80	3	84	126	46	86	156	150	202	100	85	54	4 I-0	6.8
100	4	104	146	52	103	167	165	252	138	126	65	4 I-1	9.8
125	5	130	181	56	118	191	198	310	167	154	85	4 I-2	16.6
150	6	153.5	211	56	135	202	198	310	167	154	85	4 I-2	18.2
200	8	199	256	60	177	227	198	310	167	154	85	4 I-2.5	21.6
250	10	253	322	68	215	280	198	310	167	154	85	4 I-2.5	30.8
300	12	302	367	78	253	312	230	388	223	246	136	4 I-3	48.2
350	14	337	410	78	276	348	230	388	223	246	136	4 I-3	65
400	16	394	469	102	338	383	230	388	223	246	136	4 I-3	87
							255	388	223	246	136	4 I-4	93
450	18	441	525	114	368	413	230	388	223	246	136	4 I-4	116
500	20	492	580	127	403	453	230	388	223	246	136	4 I-4	143

Note 1: For nominal size 40, 50 mm type (for control), the 4I-0 type should be selected. (The 4I-00 type is only designed for ON-OFF operation.)
Remark: For 400mm type with the accessories below, type 4I-4 should be selected.

- Micom unit
- Servo unit
- Speed control unit
- Potentiometer

■700G-4 I

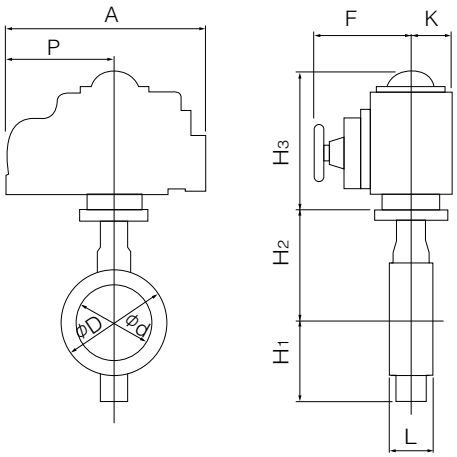

■4I Installation direction

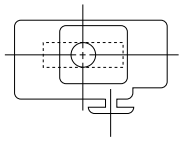

4 I A (standard)

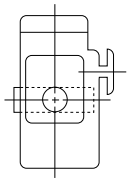

4 I B

Three phase motor actuator type 700G-4J (40mm to 300mm)

Nominal size		Dimension (mm)											Motor type	Approx. Mass (kg)
mm	inch	φd	φD	L	H_1	H_2	H_3	H_4	A	P	F	K		
40	1 1/2	45	80	35	61	132	218	3.2	353	167	286	104	SRJ-010	15.2
50	2	56	90	43	68	138	218	3.2	353	167	286	104	SRJ-010	15.5
65	2 1/2	69	115	46	79	151	218	3.2	353	167	286	104	SRJ-010	16.2
80	3	84	126	46	86	156	218	3.2	353	167	286	104	SRJ-010	16.3
100	4	104	146	52	103	167	218	3.2	353	167	286	104	SRJ-010	16.9
125	5	130	181	56	118	191	218	15	353	167	286	104	SRJ-020	19.6
150	6	153.5	211	56	135	202	218	15	353	167	286	104	SRJ-020	21
200	8	199	256	60	177	227	235	3.2	393	191	330	130	SRJ-060	38
250	10	253	322	68	215	280	235	3.2	393	191	330	130	SRJ-060	50
300	12	302	367	78	253	312	235	20	393	191	330	130	SRJ-060	61

■700G-4J

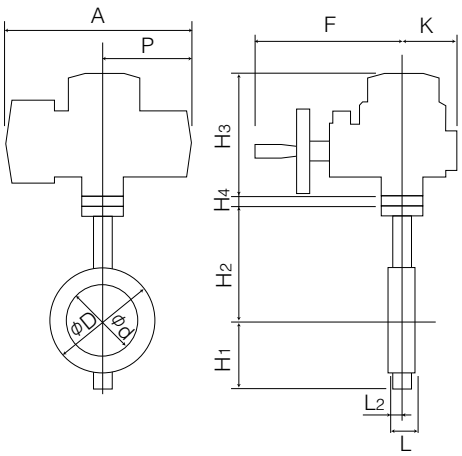

■4J Installation direction

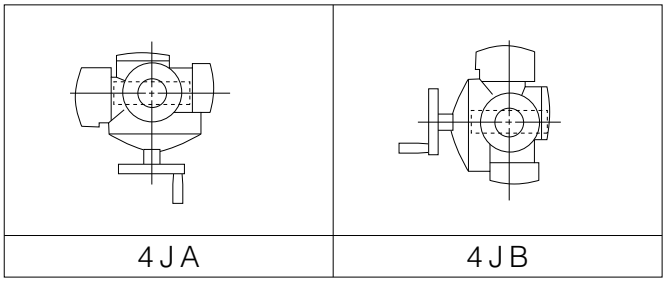

Three phase motor actuator type 700G-4L（350mm to 600mm）

Nominal size		Dimension (mm)										Motor type	Approx. Mass (kg)
mm	inch	φd	φD	L	H_1	H_2	H_3	E	K	F	M	P	
350	14	337	410	78	276	348	487	117	164	533	357	230	LTKD-01 0.2kW /MGH-3	143
400	16	394	469	102	338	383	487	117	164	533	357	230	LTKD-01 0.2kW /MGH-3	165
450	18	441	525	114	368	413	487	117	164	533	370	230	LTKD-01 0.4kW /MGH-3	192
500	20	492	580	127	403	453	487	117	164	533	370	230	LTKD-01 0.4kW /MGH-3	219
600	24	584	682	154	458	528	590	140	198	637	440	375	LTKD-05 0.75kW /MGH-4	398

■700G-4L

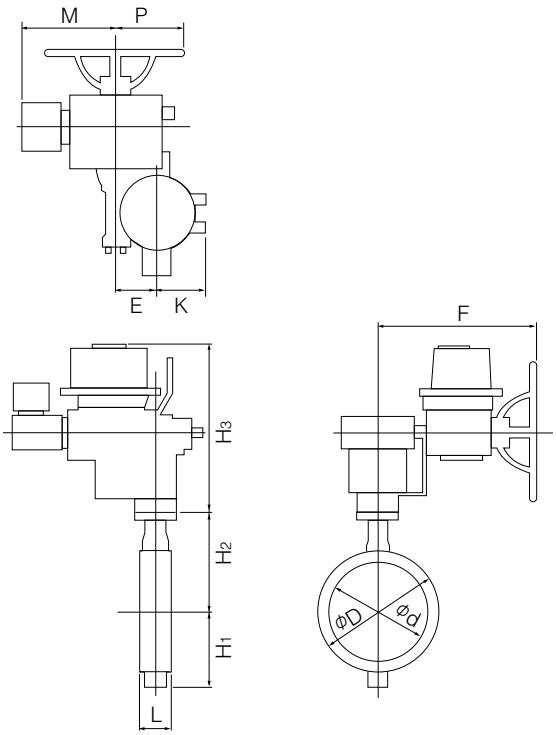

■4L Installation direction

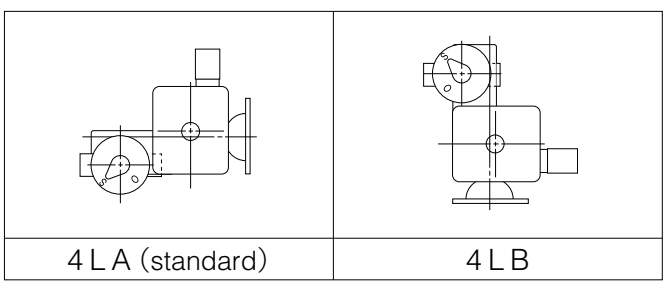

Lock lever type 704G-1T (50mm to 200mm)

Nominal size		Dimension (mm)								Lever type	Approx.Mass (kg)
mm	inch	φd	φD		L	H_1	H_2	H_3	W		
			JIS5K	JIS10K							
50	2	56	90	90	43	85	138	66	200	1T-1	3.1
65	2 1/2	69	115	115	46	94	151	66	200	1T-1	4.1
80	3	84	126	190	46	109	156	66	200	1T-1	4.6 (5.4)
100	4	104	223	223	52	117	167	66	200	1T-1	8
125	5	130	250	250	56	143	191	92	300	1T-2	11.9
150	6	153.5	276	276	56	164	202	92	300	1T-2	15.1
200	8	199	334	329	60	186	227	97	350	1T-3	22.2 (23.7)

Remark: Value in brackets is for JIS 10K flanges.

■704G-1T

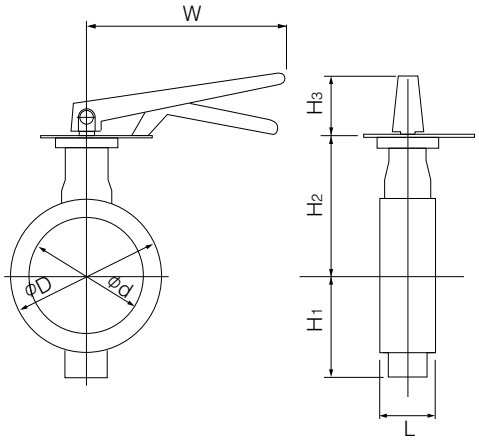

■1T Installation direction

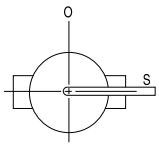	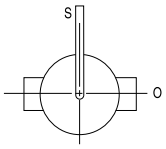	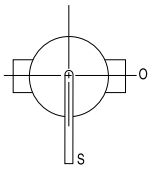	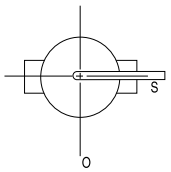
1TLS (standard)	1TLR	1TRS	1TRR
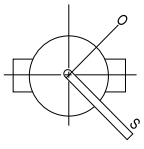	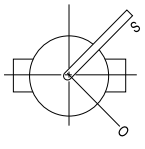	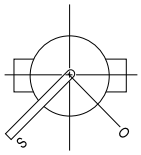	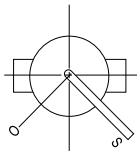
1TXS	1TXR	1TVS	1TVR

Worm gear type 704G-2U(50mm to 600mm)

Nominal size		Dimension (mm)											Gear type	Approx. Mass (kg)
mm	inch	φd	φD		L	H1	H2	H3	E	K	F	W		
			JIS5K	JIS10K										
50	2	56	90	90	43	85	138	29.5	36	46	160	100	2U-0	4.8
65	2 1/2	69	115	115	46	94	151	29.5	36	46	160	100	2U-0	5.8
80	3	84	126	190	46	109	156	29.5	36	46	160	100	2U-1	6.3 (7.1)
100	4	104	223	223	52	117	167	29.5	36	46	160	100	2U-1	9.7
125	5	130	250	250	56	143	191	34.5	44	53	173.5	160	2U-2	14.8
150	6	153.5	276	276	56	164	202	34.5	44	53	173.5	160	2U-2	18.8
200	8	199	334	329	60	186	227	41.5	67	75	198	200	2U-3	27 (28.5)
250	10	253	402	402	68	215	280	41.5	67	75	198	200	2U-3	40
300	12	302	472	438	78	253	312	48	87.5	90	222.5	200	2U-4	58 (56)
350	14	337	533	505	78	276	348	48	87.5	90	222.5	280	2U-4	86 (86)
400	16	394	597	597	102	338	383	50	90	105	266	280	2U-5	123
450	18	441	634	626	114	368	413	50	90	105	266	280	2U-5	148 (151)
500	20	492	696	696	127	403	453	50	90	105	266	280	2U-5	195
600	24	584	820	795	154	458	528	61	113	140	352	400	2U-6	306 (300)

Remark: Value in brackets is for JIS 10K flanges.

■704G-2U

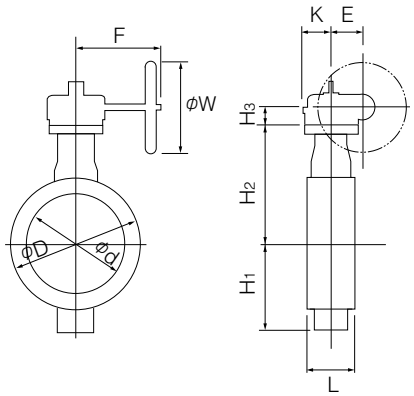

■2U Installation direction

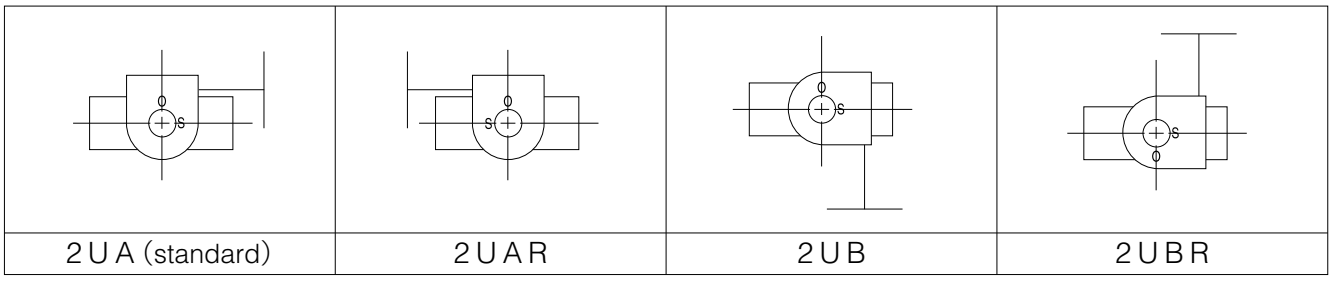

2UA (standard)	2UAR	2UB	2UBR

Center handle type 704G-2G (50mm to 300mm) / 704G-2R (350mm to 600mm)

Nominal size		Dimension (mm)								Center handle type	Approx. Mass (kg)
mm	inch	φd	φD		L	H_1	H_2	H_3	W		
			JIS5K	JIS10K							
50	2	56	90	90	43	85	138	136	100	2G-1	5.4
65	21/2	69	115	115	46	94	151	136	100	2G-1	6.4
80	3	84	126	190	46	109	156	136	100	2G-1	6.9 (7.7)
100	4	104	223	223	52	117	167	136	100	2G-1	10.3
125	5	130	250	250	56	143	191	133	100	2G-2	14.4
150	6	153.5	276	276	56	164	202	133	100	2G-2	17.6
200	8	199	334	329	60	186	227	151	200	2G-3	26.1 (27.6)
250	10	253	402	402	68	215	280	151	200	2G-3	40
300	12	302	472	438	78	253	312	161	200	2G-4	52 (50)
350	14	337	533	505	78	276	348	409	355	2R-3	103 (103)
400	16	394	597	597	102	338	383	409	355	2R-3	140
450	18	441	634	626	114	368	413	409	355	2R-3	166 (169)
500	20	492	696	696	127	403	453	409	355	2R-3	213
600	24	584	820	795	154	458	528	498	450	2R-4	328 (322)

Remark: Value in brackets is for JIS 10K flanges.

■704G-2G/2R

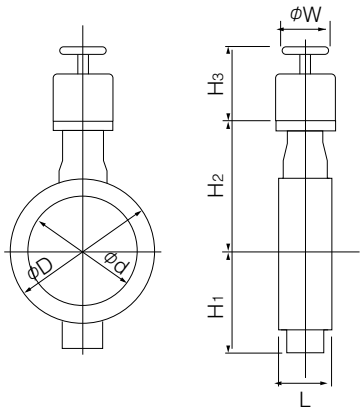

Double-acting pneumatic cylinder type 704G-7E(50mm to 350mm)

■Standard

Nominal size		Dimension (mm)											Cylinder type	Approx. Mass (kg)
mm	inch	φd	φD		L	H1	H2	H3	A	P	f1	f2		
			JIS5K	JIS10K										
50	2	56	90	90	43	85	138	125	228	116	57	29	T35	5
65	2 1/2	69	115	115	46	94	151	125	228	116	57	29	T35	6
80	3	84	126	190	46	109	156	168	276	142	75	47	T85	11 (10)
100	4	104	223	223	52	117	167	168	276	142	75	47	T85	12
125	5	130	250	250	56	143	191	168	276	142	75	47	T85	14
150	6	153.5	276	276	56	164	202	203	346	176	79	57	T200	19
200	8	199	334	329	60	176	227	231	423	214	91	69	T380	29 (31)
250	10	253	402	402	68	215	280	231	423	214	91	69	T380	41
300	12	302	472	438	78	253	312	269	546	270	118	85	T750	63
350	14	337	533	505	78	276	348	269	546	270	118	85	T750	94

■Heavy duty

Nominal size		Dimension (mm)											Cylinder type	Approx. Mass (kg)
mm	inch	φd	φD		L	H1	H2	H3	A	P	f1	f2		
			JIS5K	JIS10K										
50	2	56	90	90	43	85	138	125	228	116	57	29	T35	5
65	2 1/2	69	115	115	46	94	151	125	228	116	57	29	T35	6
80	3	84	126	190	46	109	156	168	276	142	75	47	T85	11 (10)
100	4	104	223	223	52	117	167	203	346	176	79	57	T200	15
125	5	130	250	250	56	143	191	203	346	176	79	57	T200	17
150	6	153.5	276	276	56	164	202	203	346	176	79	57	T200	19
200	8	199	334	329	60	176	227	231	423	214	91	69	T380	29 (31)
250	10	253	402	402	68	215	280	231	423	214	91	69	T380	41
300	12	302	472	438	78	253	312	269	546	270	118	85	T750	63

Selection criteria		
	Standard	Select when none of the following heavy duty items apply.
	Heavy duty	Select when any of the following items apply. ①Powder or high viscosity fluid (crude oil, etc.) ②Control specification (with positioner) ③Emergency open valve or pipe dead end valve ④Air or Gas

■704G-7E

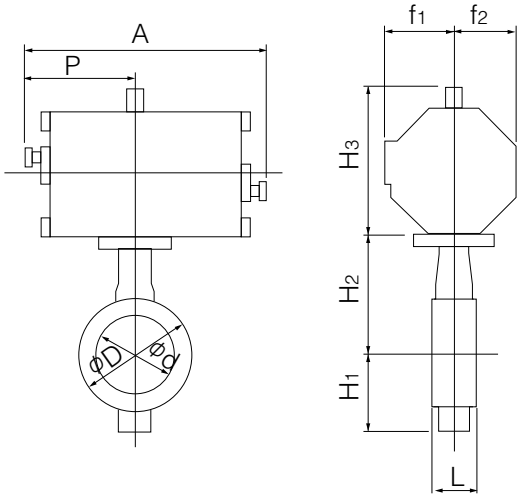

■7E Installation direction

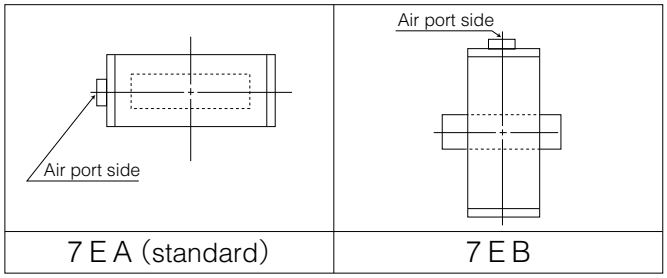

Double-acting pneumatic cylinder type 704G-3A (350mm to 600mm)

■Standard

Nominal size		Dimension (mm)											Cylinder type	Approx. Mass (kg)
mm	inch	φd	φD		L	H1	H2	H3	A	P	f1	f2		
			JIS5K	JIS10K										
400	16	394	597	597	102	338	383	364	743	381	100	164	TGA-125	153
450	18	441	634	626	114	368	413	412	810	417	100	180	TGA-140	191
500	20	492	696	696	127	403	453	465	939	483	130	202	TGA-160	269
600	24	584	820	795	154	458	528	478	1053	543	130	218	TGA-180	414 (408)

■Heavy duty

Nominal size		Dimension (mm)											Cylinder type	Approx. Mass (kg)
mm	inch	φd	φD		L	H1	H2	H3	A	P	f1	f2		
			JIS5K	JIS10K										
350	14	337	533	505	78	276	348	364	743	381	100	164	TGA-125	109
400	16	394	597	597	102	338	383	412	810	417	100	180	TGA-140	159
450	18	441	634	626	114	368	413	465	939	483	130	202	TGA-160	233 (236)
500	20	492	696	696	127	403	453	465	939	483	130	202	TGA-160	269
600	24	584	820	795	154	458	528	525	1163	599	160	253	TGA-200	474 (468)

Remark: Value in brackets is for JIS 10K flanges.

Selection criteria		
	Standard	Select when none of the following heavy duty items apply.
	Heavy duty	Select when any of the following items apply. ①Powder or high viscosity fluid (crude oil, etc.) ②Control specification (with positioner) ③Emergency open valve or pipe dead end valve ④Air or Gas

■704G-3A

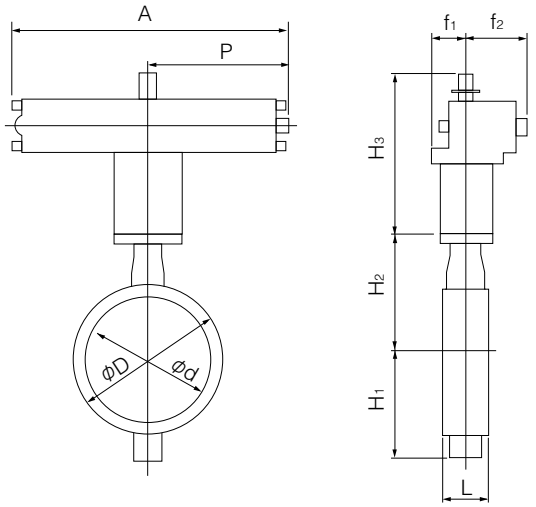

■3A Installation direction

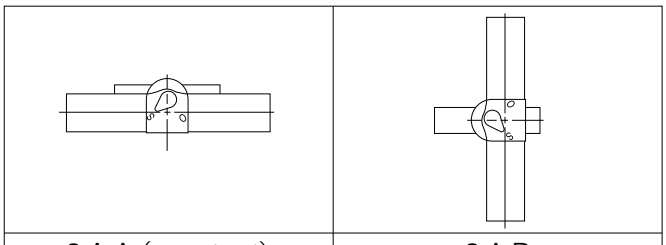

3 A A (standard)	3 A B

■Standard

Nominal size		Dimension (mm)											Cylinder type	Approx. Mass (kg)
mm	inch	φd	φD		L	H1	H2	H3	A	P	f1	f2		
			JIS5K	JIS10K										
50	2	56	90	90	43	85	138	168	364	183	75	47	T85S	9
65	2 1/2	69	115	115	46	94	151	203	449	226	79	57	T200S	15
80	3	84	126	190	46	109	156	203	449	226	79	57	T200S	15 (16)
100	4	104	223	223	52	117	167	203	449	226	79	57	T200S	19
125	5	130	250	250	56	143	191	231	550	276	91	69	T380S	30
150	6	153.5	276	276	56	164	202	231	550	276	91	69	T380S	33
200	8	199	334	329	60	176	227	269	723	360	118	85	T750S	52 (53)
250	10	253	402	402	68	215	280	269	723	360	118	85	T750S	65

■Heavy duty

Nominal size		Dimension (mm)											Cylinder type	Approx. Mass (kg)
mm	inch	φd	φD		L	H1	H2	H3	A	P	f1	f2		
			JIS5K	JIS10K										
50	2	56	90	90	43	85	138	168	364	183	75	47	T85S	9
65	2 1/2	69	115	115	46	94	151	203	449	226	79	57	T200S	15
80	3	84	126	190	46	109	156	203	449	226	79	57	T200S	15 (16)
100	4	104	223	223	52	117	167	231	550	276	91	69	T380S	27
125	5	130	250	250	56	143	191	231	550	276	91	69	T380S	30
150	6	153.5	276	276	56	164	202	269	723	360	118	85	T750S	47

Selection criteria		
	Standard	Select when none of the following heavy duty items apply.
	Heavy duty	Select when any of the following items apply. ①Powder or high viscosity fluid (crude oil, etc.) ②Control specification (with positioner) ③Emergency open valve or pipe dead end valve ④Air or Gas

■704G-7F

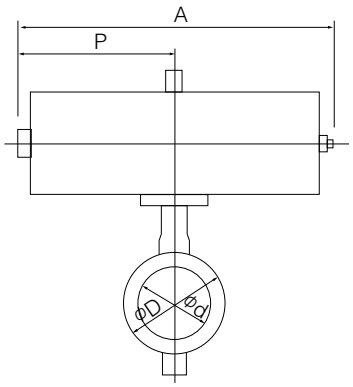

■704G-7G

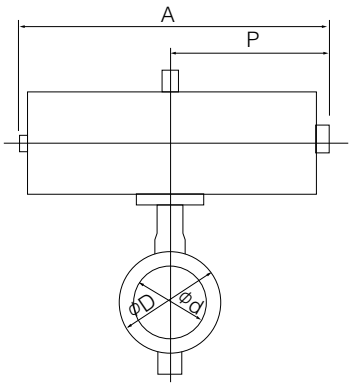

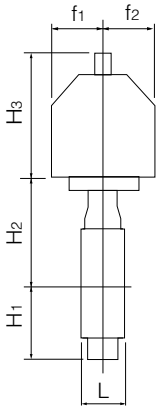

■7F Installation direction

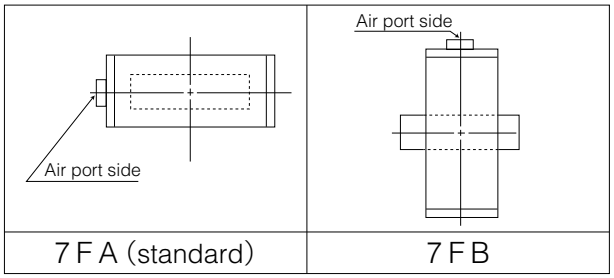

7 F A (standard)	7 F B

■7G Installation direction

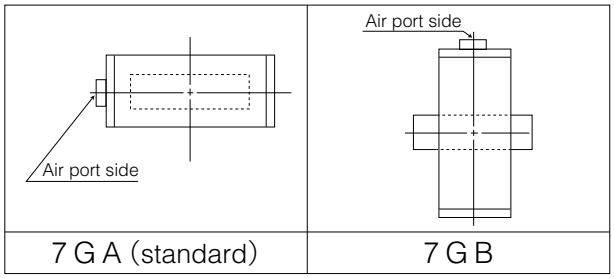

7 G A (standard)	7 G B

Single-acting pneumatic cylinder type 704G-3U (Air to open: 200mm to 600mm) / 704G-3K (Air to close: 200mm to 600mm)

■Standard

Nominal size		Dimension (mm)											Cylinder type	Approx. Mass (kg)
mm	inch	φd	φD		L	H1	H2	H3	A	P	f1	f2		
			JIS5K	JIS10K										
250	10	253	402	402	68	215	280	307	945	585	70	165	TG-10S	88
300	12	302	472	438	78	253	312	307	1080	720	94	206	TG-12S	145 (143)
350	14	337	533	505	78	276	348	307	1080	720	94	206	TG-12S	171 (171)
400	16	394	597	597	102	338	383	340	1255	865	131	257	TG-14S	305
450	18	441	634	626	114	368	413	340	1255	865	131	257	TG-14S	330 (333)
500	20	492	696	696	127	403	453	474	1655	1095	164	348	TG-20S	590
600	24	584	820	795	154	458	528	474	1655	1095	164	348	TG-20S	686 (680)

■Heavy duty

Nominal size		Dimension (mm)											Cylinder type	Approx. Mass (kg)
mm	inch	φd	φD		L	H1	H2	H3	A	P	f1	f2		
			JIS5K	JIS10K										
200	8	199	334	329	60	186	227	307	945	585	70	165	TG-10S	75 (77)
250	10	253	402	402	68	215	280	307	1080	720	94	206	TG-12S	133
300	12	302	472	438	78	253	312	307	1080	720	94	206	TG-12S	145 (143)
350	14	337	533	505	78	276	348	340	1255	865	131	257	TG-14S	267 (267)
400	16	394	597	597	102	338	383	340	1255	865	131	257	TG-14S	305
450	18	441	634	626	114	368	413	474	1655	1095	164	348	TG-20S	543 (546)
500	20	492	696	696	127	403	453	474	1655	1095	164	348	TG-20S	590
600	24	584	820	795	154	458	528	474	1655	1095	164	348	TG-20S	686 (680)

Remark: Value in brackets is for JIS 10K flanges.

Selection criteria		
	Standard	Select when none of the following heavy duty items apply.
	Heavy duty	Select when any of the following items apply. ①Powder or high viscosity fluid (crude oil, etc.) ②Control specification (with positioner) ③Emergency open valve or pipe dead end valve ④Air or Gas

■704G-3U

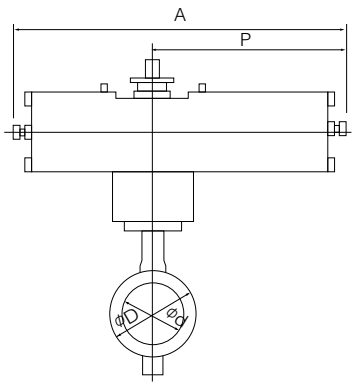

■704G-3K

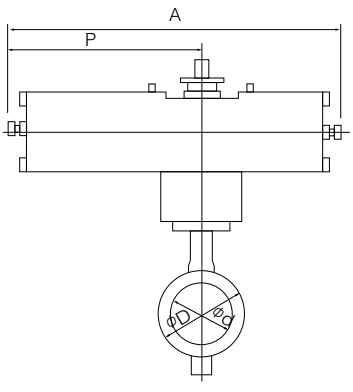

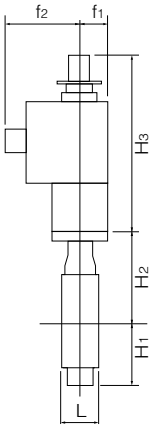

■3U Installation direction

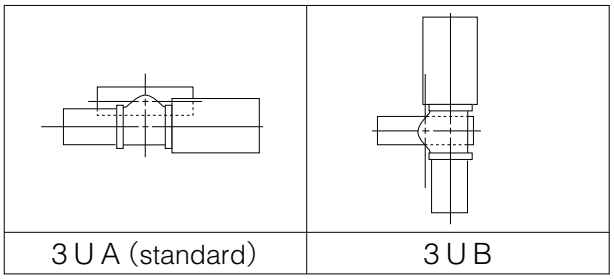

3UA (standard)	3UB

■3K Installation direction

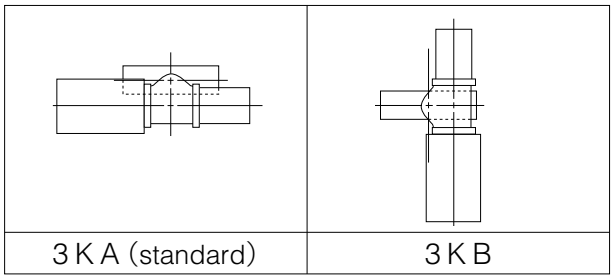

3KA (standard)	3KB

Single phase electric motor type 704G-4I (50mm to 500mm)

Nominal size		Dimension (mm)											Motor type	Approx. Mass (kg)
mm	inch	φd	φD		L	H1	H2	H3	A	P	F	K		
			JIS5K	JIS10K										
50	2	56	90	90	43	85	138	120	161	84	58	45	4 I-00	5.9
								150	202	100	85	54	4 I-0	6.7
65	2 1/2	69	115	115	46	94	151	150	202	100	85	54	4 I-0	7.7 (9)
80	3	84	126	190	46	109	156	150	202	100	85	54	4 I-0	8.2
100	4	104	223	223	52	117	167	165	252	138	126	65	4 I-1	13.8
125	5	130	250	250	56	143	191	198	310	167	154	85	4 I-2	21.8
150	6	153.5	276	276	56	164	202	198	310	167	154	85	4 I-2	25 (31.7)
200	8	199	334	329	60	186	227	198	310	167	154	85	4 I-2.5	30.2
250	10	253	402	402	68	215	280	198	310	167	154	85	4 I-2.5	45 (66)
300	12	302	472	438	78	253	312	230	388	223	246	136	4 I-3	68 (93)
350	14	337	533	505	78	276	348	230	388	223	246	136	4 I-3	93
400	16	394	597	597	102	338	383	230	388	223	246	136	4 I-3	130
								255	388	223	246	136	4 I-4	136 (164)
450	18	441	634	626	114	368	413	230	388	223	246	136	4 I-4	161
500	20	492	696	696	127	403	453	230	388	223	246	136	4 I-4	208

Note 1: For nominal size 50 mm (for control), the 4I-0 type should be selected. (The 4I-00 type is only designed for ON-OFF operation.)
Remark: Value in brackets is for JIS 10K flanges.
Remark: For 300mm with the accessories below, type 4I-4 should be selected.

- Micom unit
- Servo unit
- Speed control unit
- Potentiometer

■704G-4 I

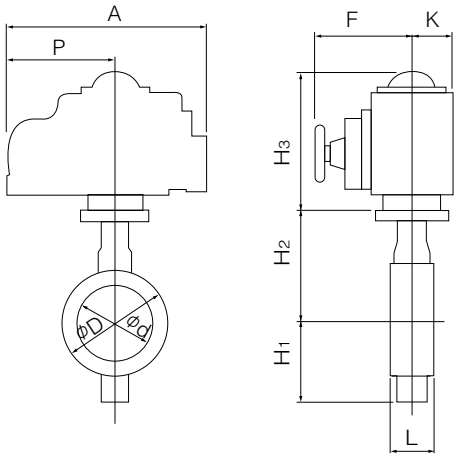

■4I Installation direction

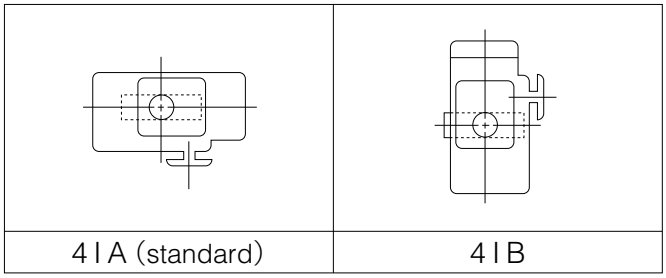

4 I A (standard)	4 I B

Three phase motor actuator type 704G-4J (50mm to 300mm)

Nominal size		Dimension (mm)											Motor type	Approx. Mass (kg)
mm	inch	φd	φD		L	H_1	H_2	H_3	H_4	A	P	F	K	
			JIS5K	JIS10K										
50	2	56	90	90	43	85	138	218	3.2	353	167	286	104	SRJ-010	15.5
65	2 1/2	69	115	115	46	94	151	218	3.2	353	167	286	104	SRJ-010	16.5 (17.8)
80	3	84	126	190	46	109	156	218	3.2	353	167	286	104	SRJ-010	17
100	4	104	223	223	52	117	167	218	3.2	353	167	286	104	SRJ-010	10.4
125	5	130	250	250	56	143	191	218	15	353	167	286	104	SRJ-020	23.6
150	6	153.5	276	276	56	164	202	218	15	353	167	286	104	SRJ-020	26.8
200	8	199	334	329	60	186	227	235	3.2	393	191	330	130	SRJ-060	37
250	10	253	402	402	68	215	280	235	3.2	393	191	330	130	SRJ-060	50 (33.5)
300	12	302	472	438	78	253	312	235	20	393	191	330	130	SRJ-060	62 (42)

Remark: Value in brackets is for JIS 10K flanges.

■704G-4J

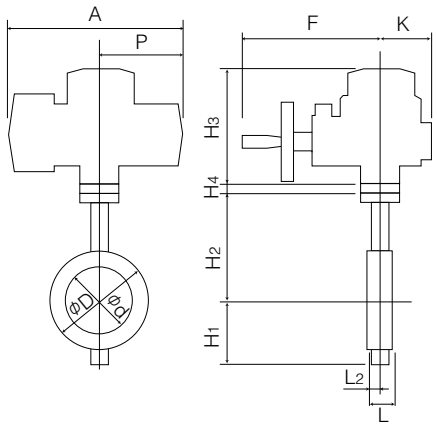

■4J Installation direction

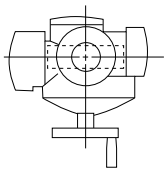

4JA

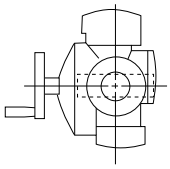

4JB

Three phase motor actuator type 704G-4L（350mm to 600mm）

Nominal size		Dimension (mm)											Motor type	Approx. Mass (kg)
mm	inch	φd	φD		L	H1	H2	H3	E	K	F	M	P	
			JIS5K	JIS10K										
350	14	337	533	505	78	276	348	487	117	164	533	357	230	LTKD-01 0.2kW /MGH-3	171 (171)
400	16	394	597	597	102	338	383	487	117	164	533	357	230	LTKD-01 0.2kW /MGH-3	208
450	18	441	634	626	114	368	413	487	117	164	533	370	230	LTKD-01 0.4kW /MGH-3	237 (240)
500	20	492	696	696	127	403	453	487	117	164	533	370	230	LTKD-01 0.4kW /MGH-3	284
600	24	584	820	795	154	458	528	590	140	198	637	440	375	LTKD-05 0.75kW /MGH-4	482 (476)

Remark: Value in brackets is for JIS 10K flanges.

■704G-4L

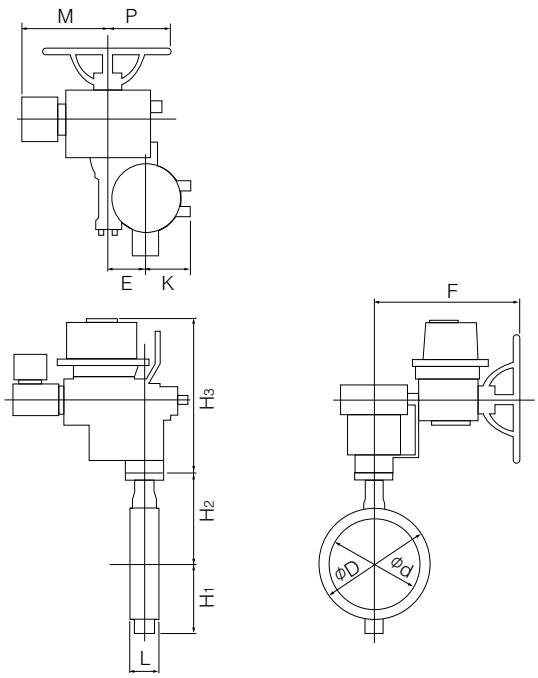

■4L Installation direction

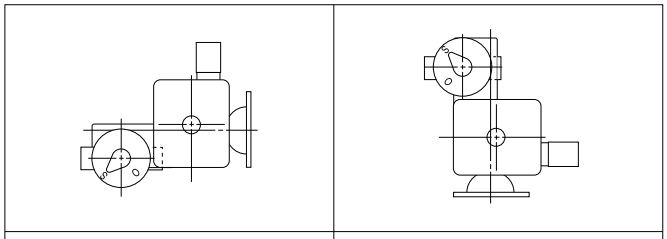

4 L A (standard)	4 L B

Lock lever type 705G-1T (50mm to 200mm)

Nominal size		Dimension (mm)							Lever type	Approx.Mass (kg)
mm	inch	φd	φD	L	H_1	H_2	H_3	W		
50	2	56	90	43	85	138	66	200	1T-1	3.1
65	2 1/2	69	115	46	94	151	66	200	1T-1	4.1
80	3	84	126	46	109	156	66	200	1T-1	4.6
100	4	104	146	52	117	167	66	200	1T-1	5.6
125	5	130	181	56	143	191	92	300	1T-2	9.3
150	6	153	211	56	164	202	92	300	1T-2	12.3
200	8	199.0	256	60	186	227	97	350	1T-3	16.7

■705G-1T

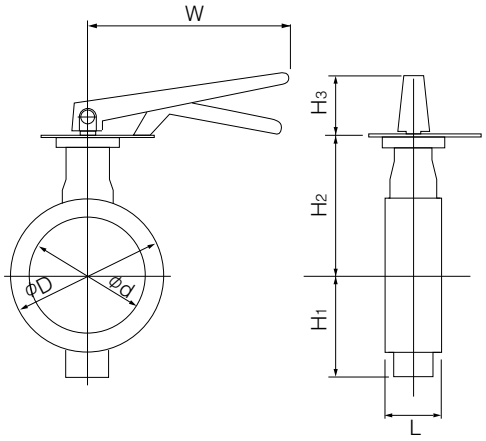

■1T Installation direction

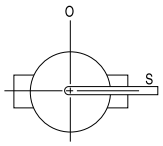	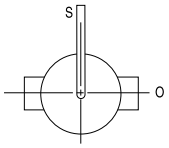	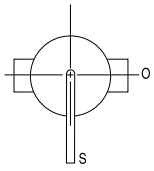	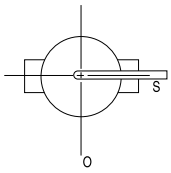
1TLS (standard)	1TLR	1TRS	1TRR
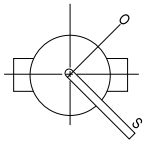	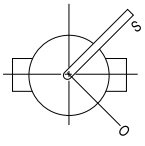	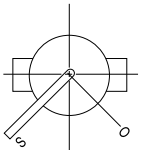	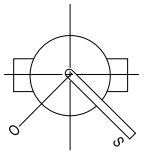
1TXS	1TXR	1TVS	1TVR

Worm gear type 705G-2U(50mm to 600mm)

Nominal size		Dimension (mm)										Gear type	Approx. Mass (kg)
mm	inch	φd	φD	L	H_1	H_2	H_3	E	K	F	W		
50	2	56	90	43	85	138	29.5	36	46	160	100	2U-0	4.8
65	2 1/2	69	115	46	94	151	29.5	36	46	160	100	2U-0	5.8
80	3	84	126	46	109	156	29.5	36	46	160	100	2U-1	6.3
100	4	104	146	52	117	167	29.5	36	46	160	100	2U-1	7.3
125	5	130	181	56	143	191	34.5	44	53	173.5	160	2U-2	12.2
150	6	153.5	211	56	164	202	34.5	44	53	173.5	160	2U-2	16
200	8	199	256	60	186	227	41.5	67	75	198	200	2U-3	23
250	10	253	322	68	215	280	41.5	67	75	198	200	2U-3	32
300	12	302	367	78	253	312	48	87	90	222.5	200	2U-4	45
350	14	337	410	78	276	348	48	87.5	90	222.5	280	2U-4	63
400	16	394	469	102	338	383	50	90	105	266	280	2U-5	88
450	18	441	525	114	368	413	50	90	105	266	280	2U-5	112
500	20	492	580	127	403	453	50	90	105	266	280	2U-5	143
600	24	584	682	154	458	528	61	113	140	352	400	2U-6	222

■705G-2U

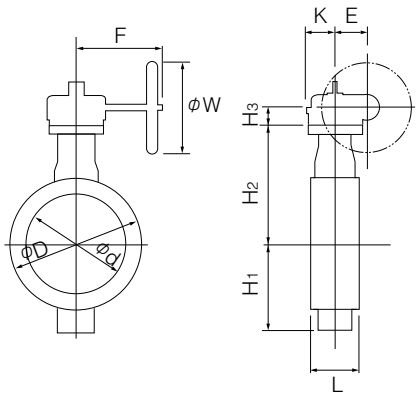

■2U Installation direction

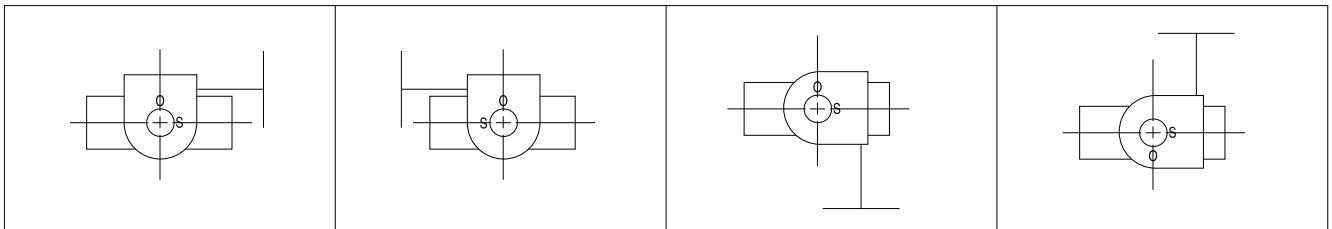

2UA (standard)	2UAR	2UB	2UBR

Center handle type 705G-2G (50mm to 300mm) / 705G-2R (350mm to 600mm)

Nominal size		Dimension (mm)							Center handle type	Approx. Mass (kg)
mm	inch	ϕd	ϕD	L	H_1	H_2	H_3	W		
50	2	56	90	43	85	138	136	100	2G-1	5.4
65	2 1/2	69	115	46	94	151	136	100	2G-1	6.4
80	3	84	126	46	109	156	136	100	2G-1	6.9
100	4	104	146	52	117	167	136	100	2G-1	7.9
125	5	130	181	56	143	191	133	100	2G-2	11.8
150	6	153.5	211	56	164	202	133	100	2G-2	14.8
200	8	199	256	60	186	227	151	200	2G-3	22.1
250	10	253	322	68	215	280	151	200	2G-3	32
300	12	302	367	78	253	312	161	200	2G-4	39
350	14	337	410	78	276	348	409	355	2R-3	80
400	16	394	469	102	338	383	409	355	2R-3	105
450	18	441	525	114	368	413	409	355	2R-3	130
500	20	492	580	127	403	453	409	355	2R-3	161
600	24	584	682	154	458	528	498	450	2R-4	244

■705G-2G/2R

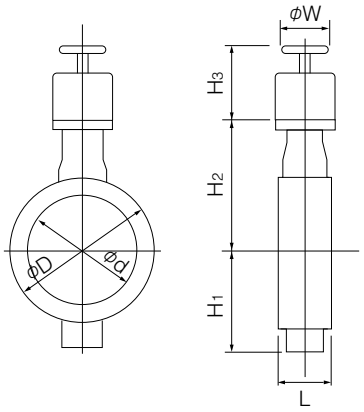

Double-acting pneumatic cylinder type 705G-7E(50mm to 350mm)

■Standard

Nominal size		Dimension (mm)										Cylinder type	Approx. Mass (kg)
mm	inch	φd	φD	L	H_1	H_2	H_3	A	P	f_1	f_2		
50	2	56	90	43	85	138	125	228	116	57	29	T35	5
65	2 1/2	69	115	46	94	151	125	228	116	57	29	T35	6
80	3	84	126	46	109	156	168	276	142	75	47	T85	9
100	4	104	146	52	117	167	168	276	142	75	47	T85	10
125	5	130	181	56	143	191	168	276	142	75	47	T85	13
150	6	153.5	211	56	164	202	203	346	176	79	57	T200	19
200	8	199	256	60	186	227	231	423	214	91	69	T380	29
250	10	253	322	68	215	280	231	423	214	91	69	T380	38
300	12	302	367	78	253	312	269	546	270	118	85	T750	55
350	14	337	410	78	276	348	324	546	270	118	85	T750	79

■Heavy duty

Nominal size		Dimension (mm)										Cylinder type	Approx. Mass (kg)
mm	inch	φd	φD	L	H_1	H_2	H_3	A	P	f_1	f_2		
50	2	56	90	43	85	138	125	228	116	57	29	T35	5
65	2 1/2	69	115	46	94	151	125	228	116	57	29	T35	6
80	3	84	126	46	109	156	168	276	142	75	47	T85	9
100	4	104	146	52	117	167	203	346	176	79	57	T200	13
125	5	130	181	56	143	191	203	346	176	79	57	T200	16
150	6	153.5	211	56	164	202	203	346	176	79	57	T200	19
200	8	199	256	60	186	227	231	423	214	91	69	T380	29
250	10	253	322	68	215	280	231	423	214	91	69	T380	38
300	12	302	367	78	253	312	269	546	270	118	85	T750	55

Selection criteria		
	Standard	Select when none of the following heavy duty items apply.
	Heavy duty	Select when any of the following items apply. ①Powder or high viscosity fluid (crude oil, etc.) ②Control specification (with positioner) ③Emergency open valve or pipe dead end valve ④Air or Gas

■705G-7E

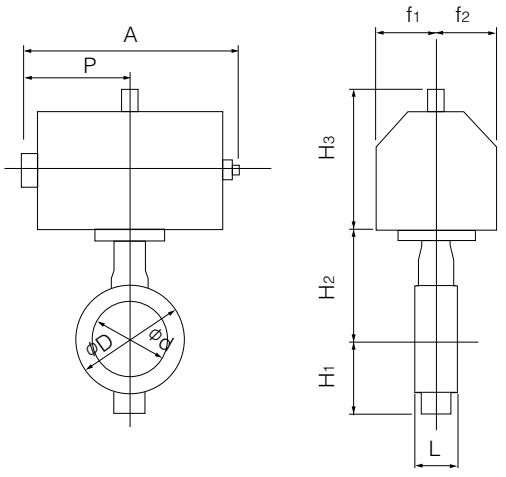

■7E Installation direction

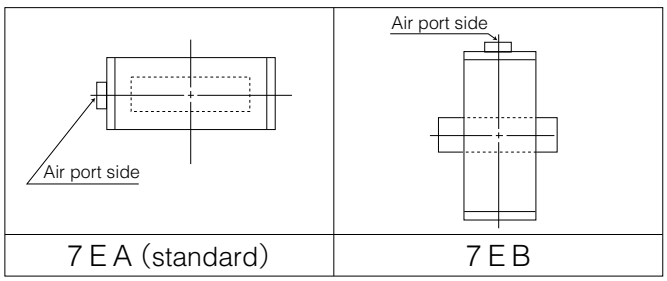

Double-acting pneumatic cylinder type 705G-3A (400mm to 600mm)

■Standard

Nominal size		Dimension (mm)										Cylinder type	Approx. Mass (kg)
mm	inch	φd	φD	L	H_1	H_2	H_3	A	P	f_1	f_2		
400	16	394	469	102	338	383	364	743	381	100	164	TGA-125	110
450	18	441	525	114	368	413	412	810	417	100	180	TGA-140	150
500	20	492	580	127	403	453	465	939	483	130	202	TGA-160	217
600	24	584	682	154	458	528	478	1053	543	130	218	TGA-180	330

■Heavy duty

Nominal size		Dimension (mm)										Cylinder type	Approx. Mass (kg)
mm	inch	φd	φD	L	H_1	H_2	H_3	A	P	f_1	f_2		
350	14	337	410	78	276	348	364	743	381	100	164	TGA-125	85
400	16	394	469	102	338	383	412	810	417	100	180	TGA-140	124
450	18	441	525	114	368	413	465	939	483	130	202	TGA-160	197
500	20	492	580	127	403	453	465	939	483	130	202	TGA-160	217
600	24	584	682	154	458	528	525	1163	599	160	253	TGA-200	390

Selection criteria		
	Standard	Select when none of the following heavy duty items apply.
	Heavy duty	Select when any of the following items apply. ①Powder or high viscosity fluid (crude oil, etc.) ②Control specification (with positioner) ③Emergency open valve or pipe dead end valve ④Air or Gas

■705G-3A

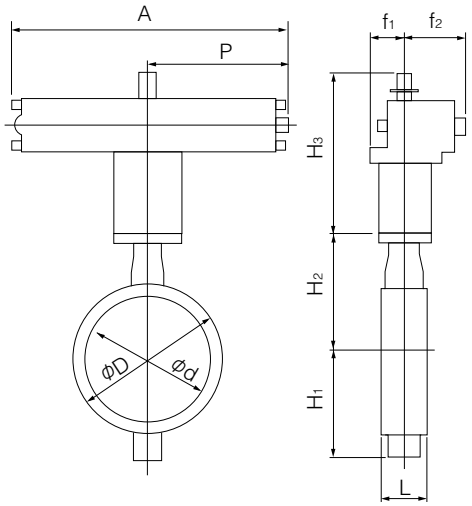

■ 3A Installation direction

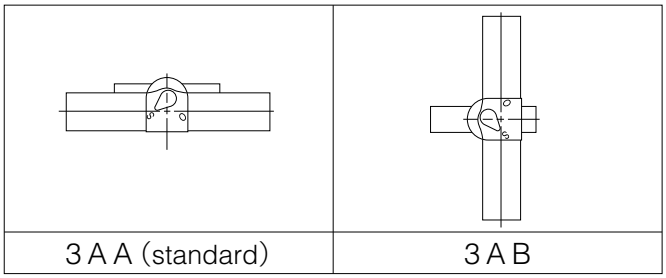

3 A A (standard)	3 A B

Single-acting pneumatic cylinder type 705G-7G(Air to open: 50mm to 250mm) / 705G-7F(Air to close: 50mm to 250mm)

■Standard

Nominal size		Dimension (mm)										Cylinder type	Approx. Mass (kg)
mm	inch	φd	φD	L	H_1	H_2	H_3	A	P	f_1	f_2		
50	2	56	90	43	85	138	168	364	183	75	47	T85S	9
65	2 1/2	69	115	46	94	151	203	449	226	79	57	T200S	14
80	3	84	126	46	109	156	203	449	226	79	57	T200S	15
100	4	104	146	52	117	167	203	449	226	79	57	T200S	16
125	5	130	181	56	143	191	231	550	276	91	69	T380S	27
150	6	153.5	211	56	164	202	231	550	276	91	69	T380S	30
200	8	199	256	60	186	227	269	723	360	118	85	T750S	48
250	10	253	322	68	215	280	269	723	360	118	85	T750S	57

■Heavy duty

Nominal size		Dimension (mm)										Cylinder type	Approx. Mass (kg)
mm	inch	φd	φD	L	H_1	H_2	H_3	A	P	f_1	f_2		
50	2	56	90	43	85	138	168	369	183	75	47	T85S	9
65	2 1/2	69	115	46	94	151	203	449	226	79	57	T200S	14
80	3	84	126	46	109	156	203	449	226	79	57	T200S	15
100	4	104	146	52	117	167	231	550	276	91	69	T380S	24
125	5	130	181	56	143	191	231	550	276	91	69	T380S	27
150	6	153.5	211	56	164	202	269	723	360	118	85	T750S	44

Selection criteria		
	Standard	Select when none of the following heavy duty items apply.
	Heavy duty	Select when any of the following items apply. ①Powder or high viscosity fluid (crude oil, etc.) ②Control specification (with positioner) ③Emergency open valve or pipe dead end valve ④Air or Gas

■705G-7F

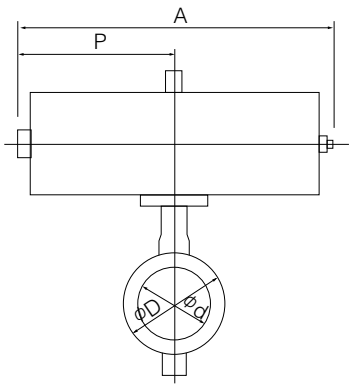

■705G-7G

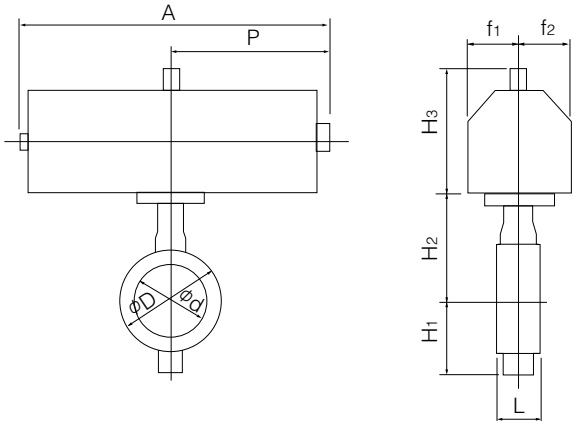

■7F Installation direction

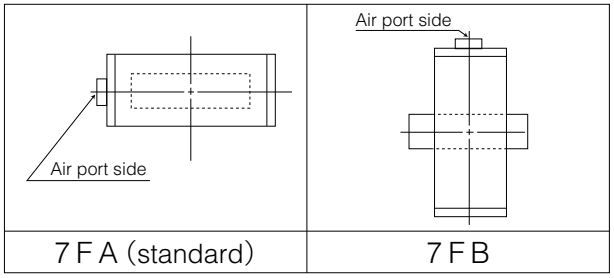

7 F A (standard)	7 F B

■7G Installation direction

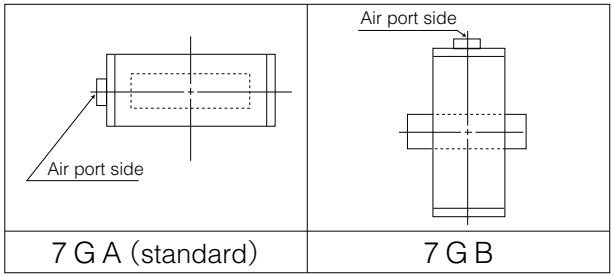

7 G A (standard)	7 G B

Single-acting pneumatic cylinder type 705G-3U (Air to open: 200mm to 600mm) / 705G-3K (Air to close: 200mm to 600mm)

■Standard

Nominal size		Dimension (mm)										Cylinder type	Approx. Mass (kg)
mm	inch	φd	φD	L	H1	H2	H3	A	P	f1	f2		
250	10	253	322	68	215	280	307	945	585	70	165	TG-10S	80
300	12	302	367	78	253	312	307	1080	720	94	206	TG-12S	132
350	14	337	410	78	276	348	307	1080	720	94	206	TG-12S	148
400	16	394	469	102	338	383	340	1255	865	131	257	TG-14S	270
450	18	441	525	114	368	413	340	1255	865	131	257	TG-14S	294
500	20	492	580	127	403	453	474	1655	1095	164	348	TG-20S	538
600	24	584	682	154	458	528	474	1655	1095	164	348	TG-20S	602

■Heavy duty

Nominal size		Dimension (mm)										Cylinder type	Approx. Mass (kg)
mm	inch	φd	φD	L	H1	H2	H3	A	P	f1	f2		
200	8	199	256	60	186	227	307	945	585	70	165	TG-10S	71
250	10	253	322	68	215	280	307	1080	720	94	206	TG-12S	125
300	12	302	367	78	253	312	307	1080	720	94	206	TG-12S	132
350	14	337	410	78	276	348	340	1255	865	131	257	TG-14S	244
400	16	394	469	102	338	383	340	1255	865	131	257	TG-14S	270
450	18	441	525	114	368	413	474	1655	1095	164	348	TG-20S	507
500	20	492	580	127	403	453	474	1655	1095	164	348	TG-20S	538
600	24	584	682	154	458	528	474	1655	1095	164	348	TG-20S	602

Selection criteria		
	Standard	Select when none of the following heavy duty items apply.
	Heavy duty	Select when any of the following items apply. ①Powder or high viscosity fluid (crude oil, etc.) ②Control specification (with positioner) ③Emergency open valve or pipe dead end valve ④Air or Gas

■705G-3U

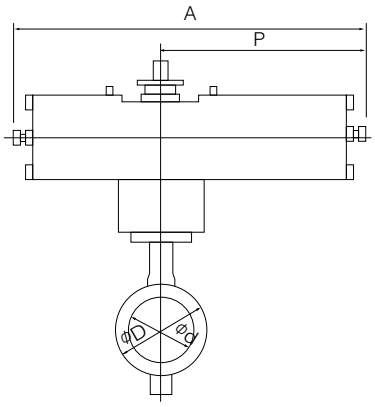

■705G-3K

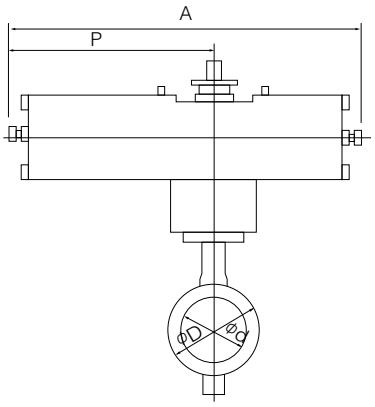

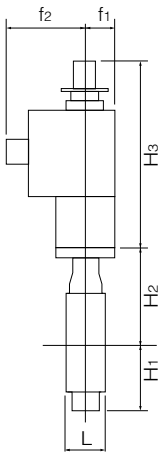

■ 3U Installation direction

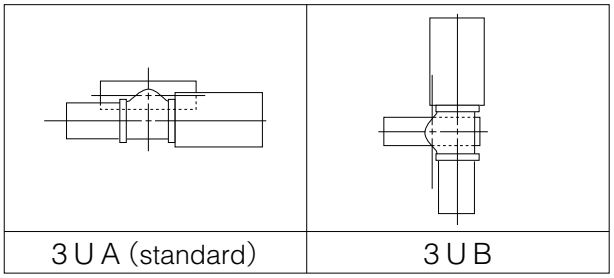

3UA (standard)	3UB

■ 3K Installation direction

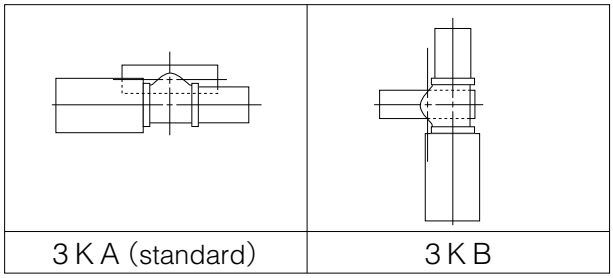

3KA (standard)	3KB

Single phase electric motor type 705G-4I (50mm to 500mm)

Nominal size		Dimension (mm)										Motor type	Approx. Mass (kg)
mm	inch	φd	φD	L	H_1	H_2	H_3	A	P	F	K		
50	2	56	90	43	85	138	120	161	84	58	45	4 I-00	5.3
							150	202	100	85	54	4 I-0	6.7
65	2 1/2	69	115	46	94	151	150	202	100	85	54	4 I-0	7.7
80	3	84	126	46	109	156	150	202	100	85	54	4 I-0	8.2
100	4	104	146	52	117	167	165	252	138	126	65	4 I-1	11.4
125	5	130	181	56	143	191	198	310	167	154	85	4 I-2	19.2
150	6	153.5	211	56	164	202	198	310	167	154	85	4 I-2	22.2
200	8	199	256	60	186	227	198	310	167	154	85	4 I-2.5	26.2
250	10	253	322	68	215	280	198	310	167	154	85	4 I-2.5	37
300	12	302	367	78	253	312	230	388	223	246	136	4 I-3	55
350	14	337	410	78	276	348	230	388	223	246	136	4 I-3	70
400	16	394	469	102	338	383	230	388	223	246	136	4 I-3	95
							255	388	223	246	136	4 I-4	101
450	18	441	525	114	368	413	230	388	223	246	136	4 I-4	125
500	20	492	580	127	403	453	230	388	223	246	136	4 I-4	156

Note 1: For nominal size 50 mm type (for control), the 4I-0 type should be selected. (The 4I-00 type is only designed for ON-OFF operation.)
Remark: For 400mm type with the accessories below, type 4I-4 should be selected.

- Micom unit
- Servo unit
- Speed control unit
- Potentiometer

■705G-4 I

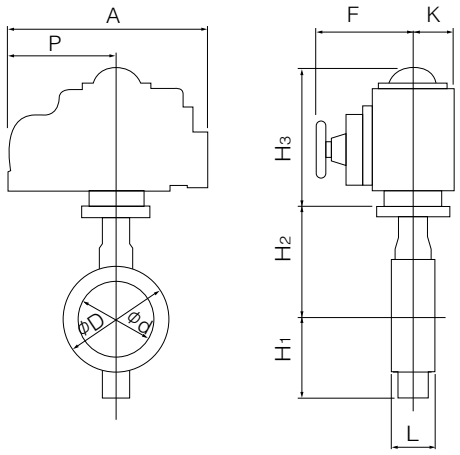

■ 4I Installation direction

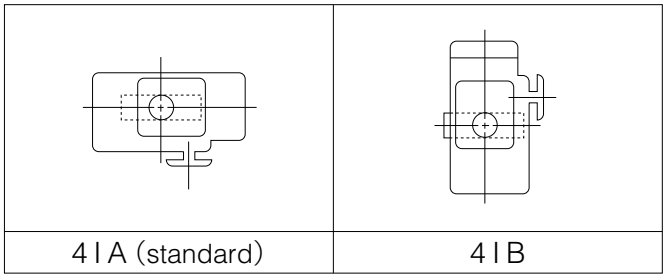

4 I A (standard)	4 I B

Three phase motor actuator type 705G-4J (50mm to 300mm)

Nominal size		Dimension (mm)											Motor type	Approx. Mass (kg)
mm	inch	φd	φD	L	H1	H2	H3	H4	A	P	F	K		
50	2	56	90	43	85	138	218	3.2	353	167	286	104	SRJ-010	16.2
65	2 1/2	69	115	46	94	151	218	3.2	353	167	286	104	SRJ-010	17.2
80	3	84	126	46	109	156	218	3.2	353	167	286	104	SRJ-010	17.7
100	4	104	146	52	117	167	218	3.2	353	167	286	104	SRJ-010	18.5
125	5	130	181	56	143	191	218	15	353	167	286	104	SRJ-020	22.2
150	6	153.5	211	56	164	202	218	15	353	167	286	104	SRJ-020	25
200	8	199	256	60	186	227	235	3.2	393	191	330	130	SRJ-060	43
250	10	253	322	68	215	280	235	3.2	393	191	330	130	SRJ-060	56
300	12	302	367	78	253	312	235	20	393	191	330	130	SRJ-060	67

■705G-4J

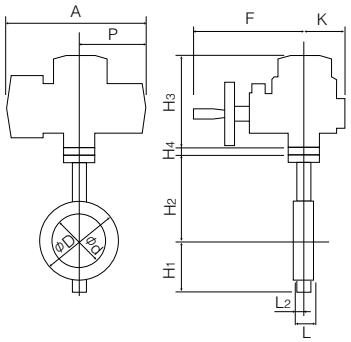

■4J Installation direction

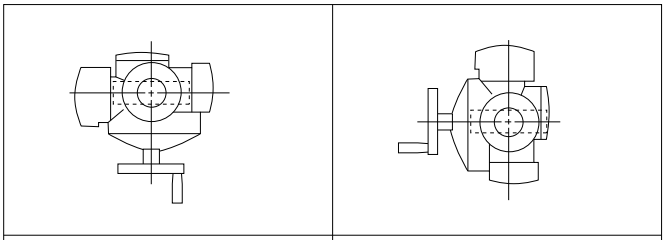

4JA	4JB

Three phase motor actuator type 705G-4L (350mm to 600mm)

Nominal size		Dimension (mm)											Motor type	Approx. Mass (kg)
mm	inch	φd	φD	L	H1	H2	H3	E	K	F	M	P		
350	14	337	410	78	276	348	487	117	164	533	357	230	LTKD-01 0.2kW /MGH-3	148
400	16	394	469	102	338	383	487	117	164	533	357	230	LTKD-01 0.2kW /MGH-3	173
450	18	441	525	114	368	413	487	117	164	533	370	230	LTKD-01 0.4kW /MGH-3	201
500	20	492	580	127	403	453	487	117	164	533	370	230	LTKD-01 0.4kW /MGH-3	232
600	24	584	682	154	458	528	590	140	198	637	440	375	LTKD-05 0.75kW /MGH-4	398

■705G-4L

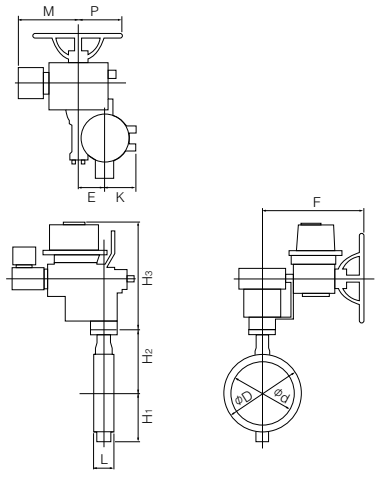

■4L Installation direction

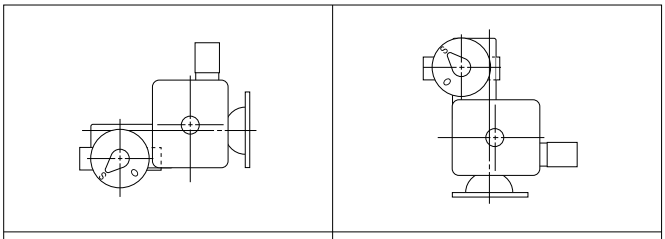

4LA (standard)	4LB

700G/704G/705G Cv value/pressure loss coefficient

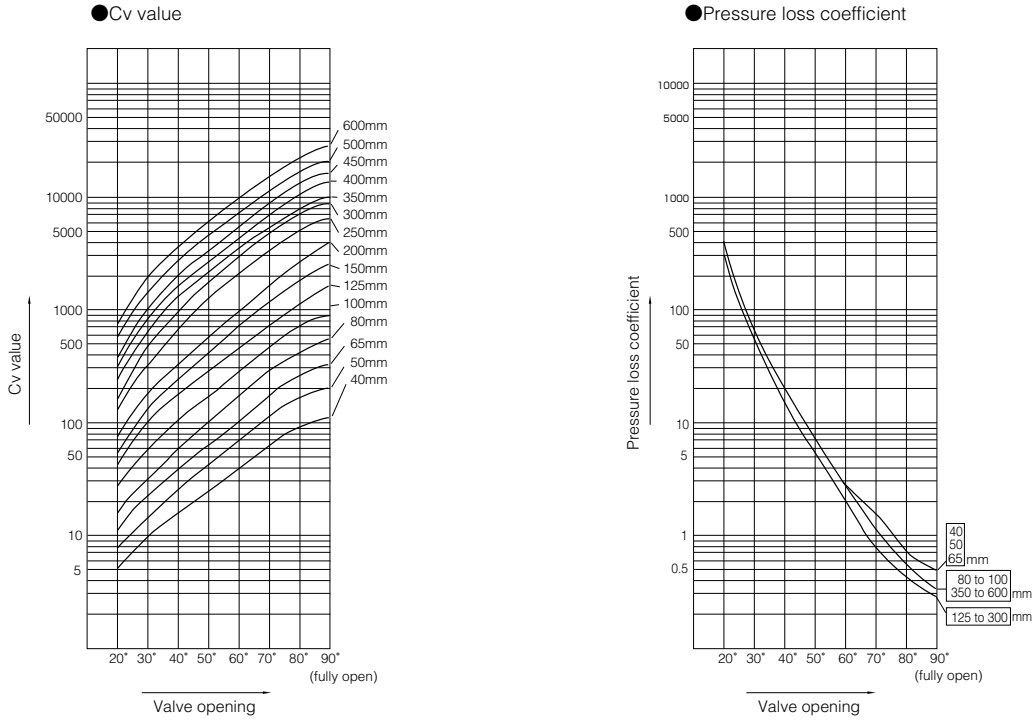

700G/704G/705G Cv value

Nominal size		Valve opening							
mm	inch	20°	30°	40°	50°	60°	70°	80°	90°
40	1 1/2	5	9	16	25	39	61	95	121
50	2	8	15	25	40	64	103	160	200
65	2 1/2	12	25	41	64	102	162	260	320
80	3	15	33	57	95	163	271	450	580
100	4	27	58	100	162	269	444	749	880
125	5	45	109	189	295	453	719	1144	1590
150	6	60	148	262	423	685	1147	1897	2800
200	8	67	188	347	576	969	1698	2902	4300
250	10	130	351	675	1225	2125	3375	5091	6200
300	12	194	487	972	1764	3011	4966	7412	8900
350	14	232	662	1350	2030	3294	5167	7832	9620
400	16	468	964	1648	2724	4529	6815	10553	12700
450	18	583	1202	2068	3448	5692	8384	13116	15500
500	20	758	1555	2656	4379	7214	10845	17100	19800
600	24	1037	2141	3681	6129	10106	14911	22827	27300

700G / 704G / 705G Pressure Loss Coefficient

Nominal size		Valve opening							
mm	inch	20°	30°	40°	50°	60°	70°	80°	90°
40	1 1/2	264	72	26	10	4	2	1	0.4
50	2	257	68	25	10	4	2	1	0.4
65	2 1/2	310	75	28	11	4	2	1	0.4
80	3	394	83	27	10	3	1	0.4	0.2
100	4	350	78	26	10	4	1	0.4	0.3
125	5	316	53	18	7	3	1	0.4	0.2
150	6	348	57	18	7	3	1	0.3	0.1
200	8	849	106	31	11	4	1	0.4	0.2
250	10	528	72	20	6	2	1	0.3	0.2
300	12	488	78	20	6	2	1	0.3	0.2
350	14	531	65	16	7	3	1	0.4	0.3
400	16	227	54	18	7	2	1	0.4	0.3
450	18	239	56	19	7	3	1	0.4	0.3
500	20	218	52	18	7	2	1	0.4	0.3
600	24	247	58	20	7	3	1	1	0.3

700G Applicable Flange Standard

Nominal size		JIS		ANSI		BS4504		DIN		BS10
mm	inch	5K	10K	125Lb	150Lb	PN10	PN16	NP10	NP16	Table E
40	1 1/2	○	○	○	○	○	○	○	○	○
50	2	○	○	○	○	○	○	○	○	○
65	2 1/2	○	○	○	○	○	○	○	○	△
80	3	○	○	◎	◎	◎	◎	◎	◎	○
100	4	○	○	◎	◎	◎	◎	◎	◎	○
125	5	○	○	◎	◎	◎	◎	◎	◎	○
150	6	○	○	○	○	○	○	○	○	○
200	8	○	○	◎	◎	◎	◎	◎	◎	○
250	10	○	○	○	○	○	○	○	○	○
300	12	○	○	◎	◎	◎	◎	◎	◎	○
350	14	○	○	×	×	×	×	×	×	×
400	16	○	○	×	×	×	×	×	×	×
450	18	○	○	×	×	×	×	×	×	×
500	20	○	○	×	×	×	×	×	×	×
600	24	T	T	×	×	×	×	×	×	×

○ : Can be used without flange drilling.
◎ : Can be used without flange drilling. (Use ANSI body.)
△ : With additional flange drilling.
T : With flange tapping.
× : Not applicable.

704G Applicable Flange Standard

Nominal size		JIS		ANSI		BS4504		DIN		BS10
mm	inch	5K	10K	125Lb	150Lb	PN10	PN16	NP10	NP16	Table E
50	2	○D/T	○D/T	○D/T	○D/T	○D/T	○D/T	○D/T	○D/T	○D/T
65	2 1/2	○D/T	○D/T	○D/T	○D/T	○D/T	○D/T	○D/T	○D/T	○D/T
80	3	◎D/T	○D/T	◎D/T	◎D/T	○D/T	○D/T	○D/T	○D/T	◎D/T
100	4	○D/T	○D/T	○D/T	○D/T	○D/T	○D/T	○D/T	○D/T	○D/T
125	5	○D/T	○D/T	○D/T	○D/T	○D/T	○D/T	○D/T	○D/T	○D/T
150	6	○D/T	○D/T	○D/T	○D/T	○D/T	○D/T	○D/T	○D/T	○D/T
200	8	◎D/T	○D/T	◎D/T	◎D/T	◎D/T	○D/T	◎D/T	○D/T	◎D/T
250	10	○D/T	○D/T	○D/T	○D/T	○D/T	○D/T	○D/T	○D/T	○D/T
300	12	◎D/T	○D/T	◎D/T	◎D/T	◎D/T	◎D/T	◎D/T	◎D/T	◎D/T
350	14	◎D/T	○D/T	◎D/T	◎D/T	○D/T	○D/T	○D/T	○D/T	◎D/T
400	16	○D/T	○D/T	○D/T	○D/T	○D/T	○D/T	○D/T	○D/T	△D/T
450	18	◎D/T	○D/T	◎D/T	◎D/T	○D/T	○D/T	○D/T	○D/T	○D/T
500	20	○D/T	○D/T	○D/T	○D/T	○D/T	○D/T	○D/T	○D/T	△D/T
600	24	◎T	○T	◎T	◎T	◎T	◎T	◎T	◎T	△T

○D/T : Drilled or tapped hole
◎D/T : Drilled or tapped hole (JIS 5K / ANSI body used)
△D/T : Drilled or tapped hole (DIN body used)
○T : Tapped hole only
◎T : Tapped hole only (JIS 5K / ANSI body used)
△T : Tapped hole only (DIN body used)

705G Applicable Flange Standard

Nominal size		JIS		ANSI		BS4504		DIN		BS10
mm	inch	5K	10K	125Lb	150Lb	PN10	PN16	NP10	NP16	Table E
50	2	D/T	D/T	D/T	D/T	D/T	D/T	D/T	D/T	D/T
65	2 1/2	D/T	D/T	D/T	D/T	D/T	D/T	D/T	D/T	D/T
80	3	D/T	D/T	D/T	D/T	D/T	D/T	D/T	D/T	D/T
100	4	D/T	D/T	D/T	D/T	D/T	D/T	D/T	D/T	D/T
125	5	D/T	D/T	D/T	D/T	D/T	D/T	D/T	D/T	D/T
150	6	D/T	D/T	D/T	D/T	D/T	D/T	D/T	D/T	D/T
200	8	D/T	D/T	D/T	D/T	D/T	D/T	D/T	D/T	D/T
250	10	D/T	D/T	D/T	D/T	D/T	D/T	D/T	D/T	D/T
300	12	D/T	D/T	D/T	D/T	D/T	D/T	D/T	D/T	D/T
350	14	D/T	D/T	D/T	D/T	D/T	D/T	D/T	D/T	D/T
400	16	D/T	D/T	D/T	D/T	D/T	D/T	D/T	D/T	D/T
450	18	D/T	D/T	D/T	D/T	D/T	D/T	D/T	D/T	D/T
500	20	D/T	D/T	D/T	D/T	D/T	D/T	D/T	D/T	D/T
600	24	T	T	T	T	T	T	T	T	T

D/T : Drilled or tapped hole
T : Tapped hole only

700G / 704G / 705G Applicable Pipe List in Case of A

Nominal size		SGP	STPY	Sch20	Sch40	VP (TS flange)	Sch10S	Sch20S	Minimum internal diameters of piping (mm)
mm	inch								
40	1 1/2	○	–	–	○	○	○	○	25
50	2	○	–	○	○	○	○	○	34
65	2 1/2	○	–	○	○	○	○	○	51
80	3	○	–	○	○	○	○	○	70
100	4	○	–	○	○	○	○	○	91
125	5	○	–	○	○	○	○	○	118
150	6	○	–	○	○	○	○	○	144
200	8	○	–	○	○	○	○	○	194
250	10	○	–	○	○	○	○	○	246
300	12	○	–	○	○	○	○	○	294
350	14	○	○	○	○	○	–	–	330
400	16	○	○	○	○	–	–	–	381
450	18	○	○	○	○	–	–	–	427
500	20	○	○	○	○	–	–	–	477
600	24	–	○	○	○	–	–	–	567

700G / 704G / 705G Applicable Pipe List in Case of B

Nominal size		SGP	STPY	Sch20	Sch40	Sch10S	Sch20S
mm	inch						
40	1 1/2	○	–	–	○	○	○
50	2	○	–	○	○	○	○
65	2 1/2	○	–	○	○	○	○
80	3	○	–	○	○	○	○
100	4	○	–	○	○	○	○
125	5	○	–	○	○	○	○
150	6	○	–	○	○	○	○
200	8	○	–	○	○	○	○
250	10	○	–	○	○	○	○
300	12	○	–	○	○	○	○
350	14	○	○	○	○	–	–
400	16	○	○	○	○	–	–
450	18	○	○	○	○	–	–
500	20	○	○	○	○	–	–
600	24	–	○	○	○	–	–

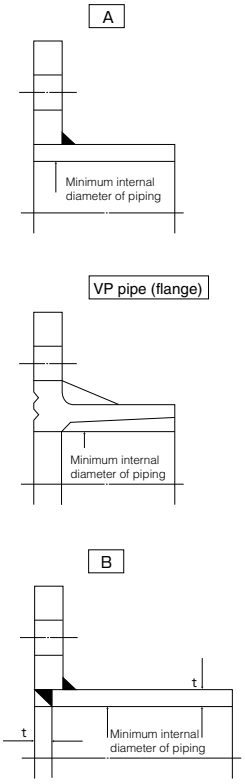

Remark 1: The symbols above mean the following.
○: Piping possible –: Not standardized
Remark 2: Butterfly valves are inserted into a pipe that was fitted with the disc when fully open.
In cases where you are using a pipe or flange that is less than the minimum inner pipe diameter, use is still possible if means are taken such as inserting a spacer between the valve and flange.
For details, please consult us.

700G Piping Bolts and Nuts Sizes

■For Hexagon Bolts and Nuts

Nominal size		JIS 5K		JIS 10K	
mm	inch	Hexagon Bolts and Nuts	Setting Bolts	Hexagon Bolts and Nuts	Setting Bolts
40	1 1/2	4-M12× 75×30	——	4-M16× 90×38	——
50	2	4-M12× 90×30	——	4-M16×100×38	——
65	2 1/2	4-M12× 90×30	——	4-M16×105×38	——
80	3	4-M16× 95×38	——	8-M16×105×38	——
100	4	8-M16×105×38	——	8-M16×110×38	——
125	5	8-M16×110×38	——	8-M20×125×46	——
150	6	8-M16×115×38	——	8-M20×130×52	——
200	8	8-M20×130×52	——	12-M20×130×52	——
250	10	12-M20×140×52	——	12-M22×150×60	——
300	12	12-M20×150×52	——	16-M22×160×60	——
350	14	12-M22×155×45	——	16-M22×160×45	——
400	16	16-M22×180×45	——	16-M24×190×45	——
450	18	16-M22×190×45	——	20-M24×205×45	——
500	20	20-M22×205×45	——	20-M24×215×45	——
600	24	16-M24×235×50	8-M24× 70×54	20-M30×255×60	8-M30× 75×60

■For Long Bolts and Nuts

Nominal size		JIS 5K		JIS 10K		ANSI 125Lb/150Lb	
mm	inch	Long Bolts and Nuts	Setting Bolts	Long Bolts and Nuts	Setting Bolts	Long Bolts and Nuts	Setting Bolts
40	1 1/2	4-M12× 95×25	——	4-M16×110×25	——	4-U1/2 ×110×32	——
50	2	4-M12×105×25	——	4-M16×120×30	——	4-U5/8 ×140×38	——
65	2 1/2	4-M12×110×25	——	4-M16×125×30	——	4-U5/8 ×140×38	——
80	3	4-M16×120×30	——	8-M16×125×30	——	4-U5/8 ×140×38	——
100	4	8-M16×130×30	——	8-M16×130×30	——	8-U5/8 ×150×38	——
125	5	8-M16×130×30	——	8-M20×150×40	——	8-U3/4 ×160×51	——
150	6	8-M16×140×35	——	8-M20×155×40	——	8-U3/4 ×165×51	——
200	8	8-M20×155×40	——	12-M20×165×40	——	8-U3/4 ×175×51	——
250	10	12-M20×165×40	——	12-M22×175×45	——	12-U7/8 ×195×58	——
300	12	12-M20×175×40	——	16-M22×185×45	——	12-U7/8 ×205×58	——
350	14	12-M22×185×45	——	16-M22×185×45	——	12-U1 ×225	——
400	16	16-M22×205×45	——	16-M24×220×50	——	16-U1 ×255	——
450	18	16-M22×225×45	——	20-M24×245×50	——	16-U1 1/8 ×280	——
500	20	20-M22×230×45	——	20-M24×265×50	——	20-U1 1/8 ×295	——
600	24	16-M24×275×50	8-M24× 70×54	20-M30×300×60	8-M30× 75×60	16-U1 1/4 ×340	8-U1 1/4×95×70

Remarks:
1. Please use a hexagon nut with 80% threading. (For ANSI, use heavy nut.)
2. A unified screw should have 8 threads per inch if its nominal diameter exceeds 1 inch.
* Nominal size “600 mm” requires hexagon bolt for setting.

Example

Long bolts: 12 - M22 × 185 × 45
Quantity / Nominal size (M) / Length of bolt (L) / Effective screw length (S)

Setting bolts: 4 - M30 × 95 × 65
(Hexagon bolts)
Quantity / Nominal size (M) / Length of bolt (L) / Effective screw length (S)

Long bolts and nuts

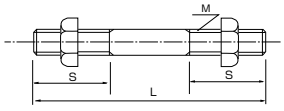

Setting bolts (Hexagon bolts)

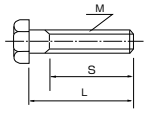

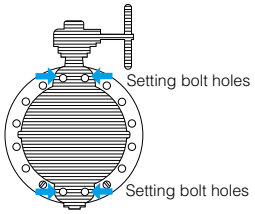

704G Piping Bolts and Nuts Sizes

* Dimensions on the table show when the piping flange hole are tapped. For drilled holes, please consult us.

Nominal size		JIS 5K	JIS 10K	ANSI 125Lb	ANSI 150Lb	DIN NP10 BS 4504 PN10
mm	inch					
50	2	8-M12X30X28	8-M16X35X33	8-U 5/8X35X30	8-5/8-11UNCX38	8-M16X35X33
65	2 1/2	8-M12X35X33	8-M16X35X33	8-U 5/8X40X30	8-5/8-11UNCX40	8-M16X35X33
80	3	8-M16X35X33	16-M16X35X33	8-U 5/8X40X38	8-5/8-11UNCX45	16-M16X40X38
100	4	16-M16X40X38	16-M16X40X38	16-U 5/8X45X38	16-5/8-11UNCX45	16-M16X40X38
125	5	16-M16X40X38	16-M20X45X41	16-U 3/4X50X44	16-3/4-10UNCX50	16-M16X40X38
150	6	16-M16X40X38	16-M20X45X41	16-U 3/4X50X44	16-3/4-10UNCX50	16-M20X45X41
200	8	16-M20X45X41	24-M20X50X46	16-U 3/4X55X44	16-3/4-10UNCX55	16-M20X50X46
250	10	24-M20X50X46	24-M22X50X46	24-U 7/8X60X50	24-7/8- 9UNCX60	24-M20X55X50
300	12	24-M20X55X51	32-M22X55X51	24-U 7/8X60X50	24-7/8- 9UNCX60	24-M20X55X50
350	14	24-M22X60X50	32-M22X60X50	24-U1 X70X57	24-1- 8UNCX70	32-M20X60X46
400	16	32-M22X60X50	32-M24X70X50	32-U1 X75X57	32-1- 8UNCX70	32-M24X70X50
450	18	32-M22X60X50	40-M24X70X50	32-U1・1/8X85X63	32-1・1/8-8UN X80	40-M24X70X50
500	20	40-M22X60X50	40-M24X70X50	40-U1・1/8X85X63	40-1・1/8-8UN X80	40-M24X70X50
600	24	40-M24X70X50	48-M30X75X60	40-U1・1/4X95X70	40-1・1/4-8UN X90	40-M27X80X60

Remarks:
1. The bolt lengths are in accordance with thickness of steel flanges.
2. A unified screw should have 8 threads per inch if its nominal diameter exceeds 1 inch.
3. The list is exclusively for standard material “SS400”.

Example

Long bolts: 12 - M22 × 185 × 45
Quantity / Nominal size (M) / Length of bolt (L) / Effective screw length (S)

Setting bolts: 4 - M30 × 95 × 65
(Hexagon bolts)
Quantity / Nominal size (M) / Length of bolt (L) / Effective screw length (S)

Long bolts and nuts

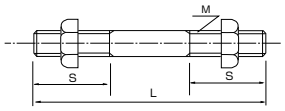

Setting bolts (Hexagon bolts)

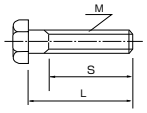

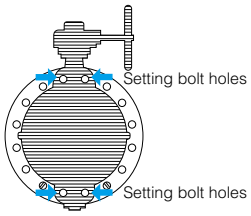

705G Piping Bolts and Nuts Sizes

■For Hexagon Bolts and Nuts (Flange Bolt Hole: Tapped Holes)

Nominal size		JIS 5K		JIS 10K	
mm	inch	Hexagon Bolts and Nuts	Setting Bolts	Hexagon Bolts and Nuts	Setting Bolts
50	2	——	8-M12× 30×28	——	8-M16× 35×32
65	2 1/2	——	8-M12× 35×33	——	8-M16× 35×32
80	3	——	8-M16× 35×33	4-M16×110×40	8-M16× 35×32
100	4	4-M16×110×40	8-M16× 40×38	4-M16×110×40	8-M16× 40×38
125	5	4-M16×110×40	8-M16× 40×38	4-M20×120×50	8-M20× 45×41
150	6	4-M16×120×40	8-M16× 40×38	4-M20×130×50	8-M20× 45×41
200	8	4-M20×130×50	8-M20× 45×41	8-M20×135×50	8-M20× 50×46
250	10	8-M20×135×50	8-M20× 50×46	8-M22×150×60	8-M22× 55×50
300	12	8-M20×150×50	8-M20× 55×51	12-M22×160×60	8-M22× 60×55
350	14	8-M22×160×60	8-M22× 60×50	12-M22×160×40	8-M22× 60×50
400	16	12-M22×175×45	8-M22× 60×50	12-M24×190×45	8-M24× 70×50
450	18	12-M22×185×45	8-M22× 60×50	16-M24×205×45	8-M24× 70×50
500	20	16-M22×205×45	8-M22× 60×50	16-M24×215×45	8-M24× 70×50
600	24	16-M24×230×50	8-M24× 70×54	20-M30×255×50	8-M30× 70×60

■For Long Bolts and Nuts (Flange Bolt Hole: Tapped Holes)

Nominal size		JIS5K		JIS10K		ANSI125Lb/150Lb	
mm	inch	Long Bolts and Nuts	Setting Bolts	Long Bolts and Nuts	Setting Bolts	Long Bolts and Nuts	Setting Bolts
50	2	——	8-M12× 30×28	—	8-M16× 35×33	——	8-U5/8-11UNCX35X30
65	2 1/2	——	8-M12× 35×33	—	8-M16× 35×33	——	8-U5/8-11UNCX40X30 (8-U5/8-11UNCX35X30)
80	3	——	8-M16× 35×33	4-M16×125×30	8-M16× 35×33	——	8-U5/8-11UNCX45X38 (8-U5/8-11UNCX40X30)
100	4	4-M16×130×30	8-M16× 40×38	4-M16×130×30	8-M16× 40×38	4-U5/8-11UNCX165X50	8-U5/8-11UNCX45X38
125	5	4-M16×130×30	8-M16× 40×38	4-M20×150×40	8-M20× 45×41	4-U3/4-10UNCX175X55	8-U3/4-10UNCX50X44
150	6	4-M16×140×35	8-M16× 40×38	4-M20×155×40	8-M20× 45×41	4-U3/4-10UNCX175X55	8-U3/4-10UNCX50X44
200	8	4-M20×155×40	8-M20× 45×41	8-M20×155×40	8-M20× 50×46	4-U3/4-10UNCX175X55	8-U3/4-10UNCX55X44
250	10	8-M20×165×40	8-M20× 50×46	8-M22×175×45	8-M22× 55×50	8-U7/8- 9UNCX215X55	8-U7/8- 9UNCX60X50
300	12	8-M20×175×40	8-M20× 55×51	12-M22×185×45	8-M22× 60×55	8-U7/8- 9UNCX215X55	8-U7/8- 9UNCX60X50
350	14	8-M22×185×45	8-M22× 60×50	12-M22×185×45	8-M22× 60×50	8-U1 - 8UNCX225	8-U1 - 8UNCX70X57
400	16	12-M22×205×45	8-M22× 60×50	12-M24×220×50	8-M24× 70×50	12-U1 - 8UNCX255	8-U1 - 8UNCX75X57
450	18	12-M22×225×45	8-M22× 60×50	16-M24×230×50	8-M24× 70×50	12-U1 1/8- 8UNX280	8-U1 1/8-8UNX85X63
500	20	16-M22×230×45	8-M22× 60×50	16-M24×245×50	8-M24× 70×50	16-U1 1/8- 8UNX295	8-U1 1/8-8UNX85X63
600	24	16-M24×275×50	8-M24× 70×54	20-M30×290×60	8-M30× 70×60	16-U1 1/4- 8UNX340	8-U1 1/4-8UNX95X70

Remarks:
Bolt/Nut material: SS400/SS400, SUS304/SUS304
The dimensions in parenthesis show ANSI125Lb. (for 65 mm and 80 mm)
Heavy nut shall be used for ANSI125Lb/150Lb hexagon nuts.
A unified screw should have 8 threads per inch if its nominal diameter exceeds 1 inch.

Example

Long bolts: 12 - M22 × 185 × 45
Quantity — Nominal size (M) — Length of bolt (L) — Effective screw length (S)

Setting bolts: 4 - M30 × 95 × 65
(Hexagon bolts)
Quantity — Nominal size (M) — Length of bolt (L) — Effective screw length (S)

Long bolts and nuts

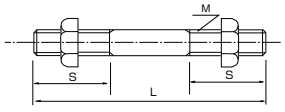

Setting bolts (Hexagon bolts)

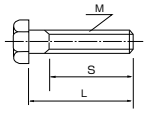

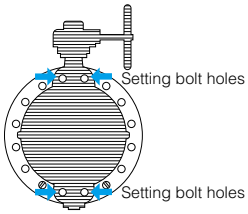

700GB



Valve nominal size

40 to 300mm

Max.working pressure MPa

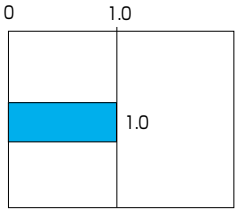

Working temperature range ˚C

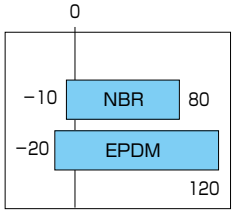

JIS JIS B 2032 Compliant
(This product conforms to General Specifications for Machinery and Equipment of the Ministry of Land, Infrastructure, Transport and Tourism.)



Drastic cost reduction is achieved

- Cost reduction by simplifying the function
  - Manual (lever, gear) only
  - Disc material: SCS13; Seat ring material: NBR/EPDM only
  - 1MPa tight shut
- Compliant with applicable standards, and maintainable
  - Compliant with JIS B 2032
  - Top flange complies with ISO5211
  - Replaceable seat ring
- Further weight saving
  - Newly-designed ribbed thin disc
  - Aluminum die-cast gear
  - Reduced number of parts, adopting plug-in bottom cover

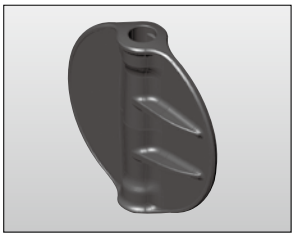

Newly-designed ribbed thin disc

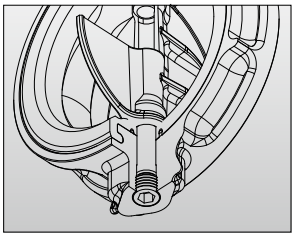

Plug-in bottom cover

To protect pipes, EPDM seat ring is recommended for the production line where calcium-containing chemicals are used.

846T/847T, which adopts fluorine resin seat, is recommended for a butterfly valve used in the production line where highly concentrated chlorine disinfectant is used.

【Warranty period】
Warranty shall cover one year from the start of the trial run or 1,000 operation cycles (with fresh water and at room temperature), whichever comes earlier.

Standard Specifications

Body type(Connection)		Concentric Rubber Seated Butterfly Valve(Wafer)
Valve nominal size		40, 50, 65, 80, 100, 125, 150, 200, 250, 300mm
Flange accommodation※1		JIS 5K/10K, GB/T9113.1 PN1.0, BS4504 PN10, DIN2632 PN10, ASME B16.1 Class 125, ASME B16.5 Class150
Face-to-face dimensions		JIS B 2002(Series 46)
Max. working pressure		1.0MPa
Allowable seat leakage rate		JIS B 2003 Rate A(Tight shut off)
Flow direction		Bi-direction
Test Pressure	Body shell test	1.5MPa(hydraulic)　※only JIS5K→ 0.75MPa
	Seat leak test	1.1MPa(pneumatic)　※only JIS5K→ 0.55MPa
Working temperature range※2		NBR: -10℃ ~ 80℃, EPDM: -20℃ ~ 120℃
Allowable temperature in continuous use※3		NBR: 0℃ ~ 60℃, EPDM: 0℃ ~ 70℃
Standard materials	Body	Ductile Iron JIS: FCD450
	Disc※4	SCS13(A351 CF8)New Ribbed Disc
	Stem※4	SUS420J2(AISI420)
	Seat ring	NBR, EPDM※5,6,7
Top flange		ISO5211 compliant
Actuator		Manual type※8
Average fluid velocity limit in pipe(Limit value)		Under 3 m/s(Valve full-opened and continuous operation)
Coating		Polyester epoxy powder coating(thermosetting)Munsell N7

※1 Overseas flange with nominal valve size of 80, 200 or 300 mm has a special body. Overseas flange with nominal valve size of 65, 100 or 125 mm needs a little processing.
※2 Operating temperature range varies depending on seat ring material. Please contact our sales staff before use.
※3 Fluid temperature range for more than one hour of continuous use. It is required that the fluid does not freeze.
※4 Materials shown in ( ): equivalent materials in ASTM/AISI.
※5 If the fluid contains chlorine, seat ring could be corroded early by combined factors such as concentration and temperature.
For further information, please contact our sales staff.
In case of chlorine-containing fluid, 846T or 847T (containing fluorine resin) is recommended depending on combined factors such as concentration.
Operating temperature range varies depending on the combination of valve disc material and seat ring. Please contact our sales staff before use.
※6 It is recommended EPDM rubber seat ring if the line is used for medical agent containing calcium composition to protect the pipes.
※7 "Allowable temperature in continuous use" stands for the temperature continuously kept exceeding one hour.
※8 Not selling separately.

700GB List of seat ring material

Material		EPDM	NBR
Temperature range	Allowable(℃)	-20~120	-10~80
	Continuous(℃)	0~70	0~60
Maximum operating pressure(MPa)		1.0	1.0
Color		black	black
Properties	Corrosion resistance	○	△
	Heat resistance	○	○
	Oil resistance	×	○
	Wear resistance	△	○

Symbols: ○·····Good (suitable for use)
△·····Usable
×·····Not usable

Note 1) NBR cannot be used for C-heavy oil for marine fuel oil (FO line) as the viscosity of oil is reduced and actual temperature is often higher even if the customer's usage condition is below 60℃.
Note 2) Never use EPDM rubber seat ring if the fluid to be used contains even a tiny amount of oil.
Note 3) The symbols ◎, ○, △ and × above indicate typical properties. These properties may vary depending on specific liquids and temperature conditions.
For further information, please contact us.

700GB Expanded View of Components

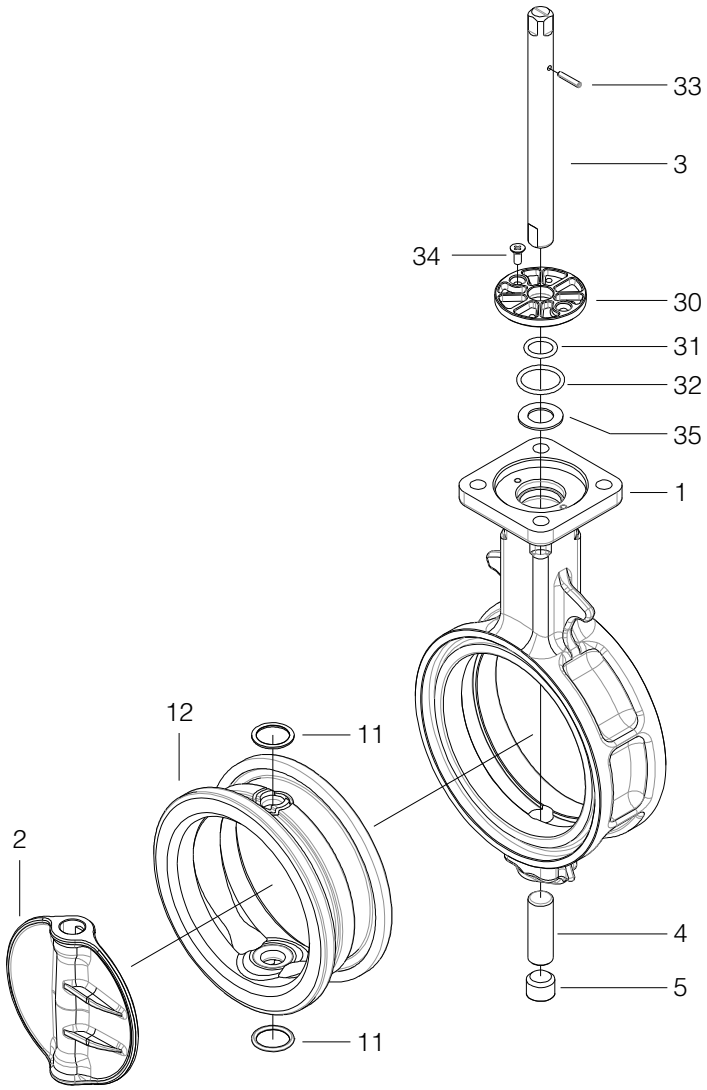

700GB Parts list

No.	Description	Q'ty	Remarks
1	Body	1	
2	Disc	1	
3	Upper stem	1	
4	Lower stem	1	
5	Hex. socket set screws	1	
★ 11	Secondary ring	2	
★ 12	Seat ring	1	
★ 30	Bushing	1	
★ 31	O-ring	1	
★ 32	O-ring	1	
34	Machine screw	2	
35	Plate	1	

Remark: The ★ indicates recommended spare parts. They are supplied as "Seat ring set" with a small hexagonal speanner to remove set screws.

700GB Actuator Selection Chart

■700GB

Type	Model	Cate-gory	Size (mm / inch)									
			40	50	65	80	100	125	150	200	250	300
			1 1/2	2	2 1/2	3	4	5	6	8	10	12
Lock lever	1T	EPDM	1T-1					1T-2				
		NBR	1T-1					1T-2				
Worm gear	2T		2T-1					2T-2			2T-3	

700GB Pressure-Temperature Rating

In case of EPDM seatring

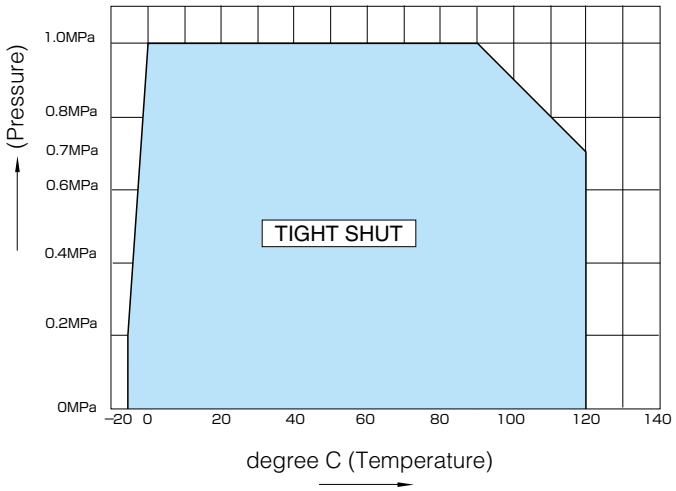

In case of NBR seatring

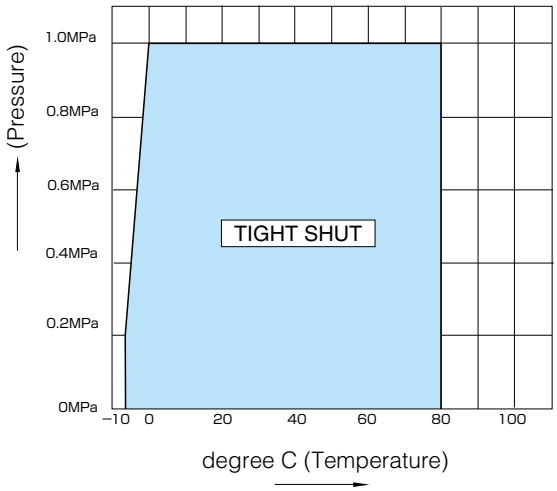

700GB

Lock lever type 700GB-1T（40mm to 150mm）

Nominal size		Dimension (mm)								Lever type	Approx.Mass (kg)
mm	inch	φd	φD	L	H_1	H_2	H_3	Q	W		
40	1 1/2	45	80	35	52	132	66	75	200	1T-1	2.1
50	2	56	90	43	59	138	66	75	200	1T-1	2.4
65	2 1/2	69	115	46	70	151	66	75	200	1T-1	3.0
80	3	84	126	46	77	156	66	75	200	1T-1	3.1
100	4	104	146	52	94	167	66	75	200	1T-1	3.8
125	5	130	181	56	108	191	92	87.5	300	1T-2	6.4
※ 150	6	153.5	211	56	125	202	92	87.5	300	1T-2	7.9

※EPDM：40mm～150mm
N B R：40mm～125mm（150 mm is not available）

■700GB-1T

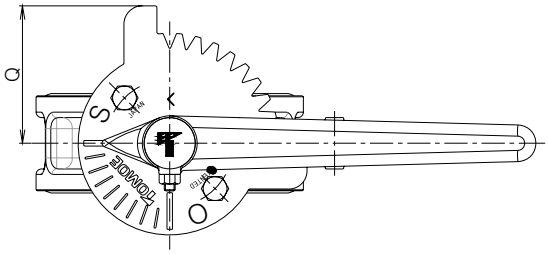

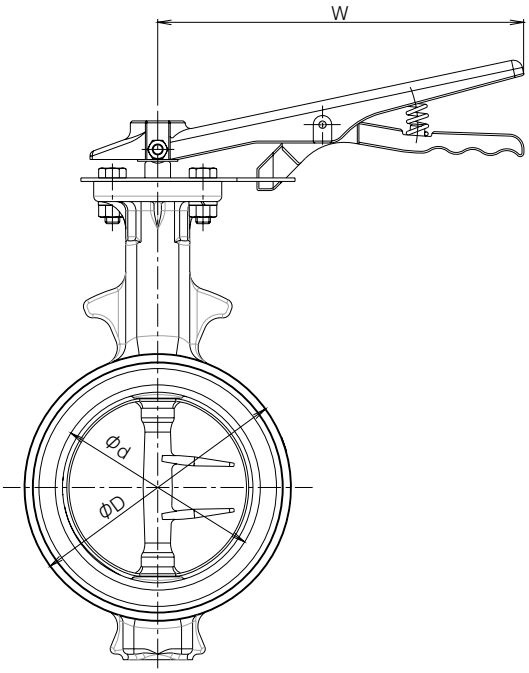

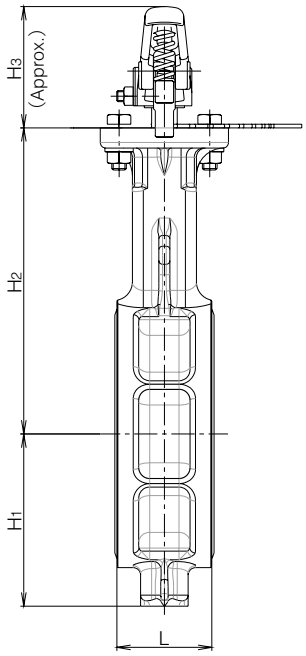

■1T Installation direction

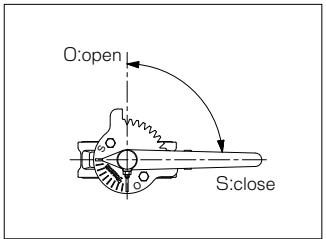

1 L S

Worm Gear Type 700GB-2T(40mm to 300mm)

Nominal size		Dimension (mm)										Worm gear type	Approx.Mass (kg)
mm	inch	ϕd	ϕD	L	H_1	H_2	H_3	E	K	F	W		
40	1 1/2	45	80	35	52	132	25	42	50	164	140	2T-1	2.8
50	2	56	90	43	59	138	25	42	50	164	140	2T-1	3.1
65	2 1/2	69	115	46	70	151	25	42	50	164	140	2T-1	3.7
80	3	84	126	46	77	156	25	42	50	164	140	2T-1	3.8
100	4	104	146	52	94	167	25	42	50	164	140	2T-1	4.4
125	5	130	181	56	108	191	30.5	60	65	240	250	2T-2	8.7
150	6	153.5	211	56	125	202	30.5	60	65	240	250	2T-2	10.2
200	8	199	256	60	167	227	30.5	60	65	240	250	2T-2	13.3
250	10	253	322	68	203	280	42	60	80	240	300	2T-3	21.1
300	12	302	367	78	241	312	42	60	80	240	300	2T-3	27.2

■700GB-2T

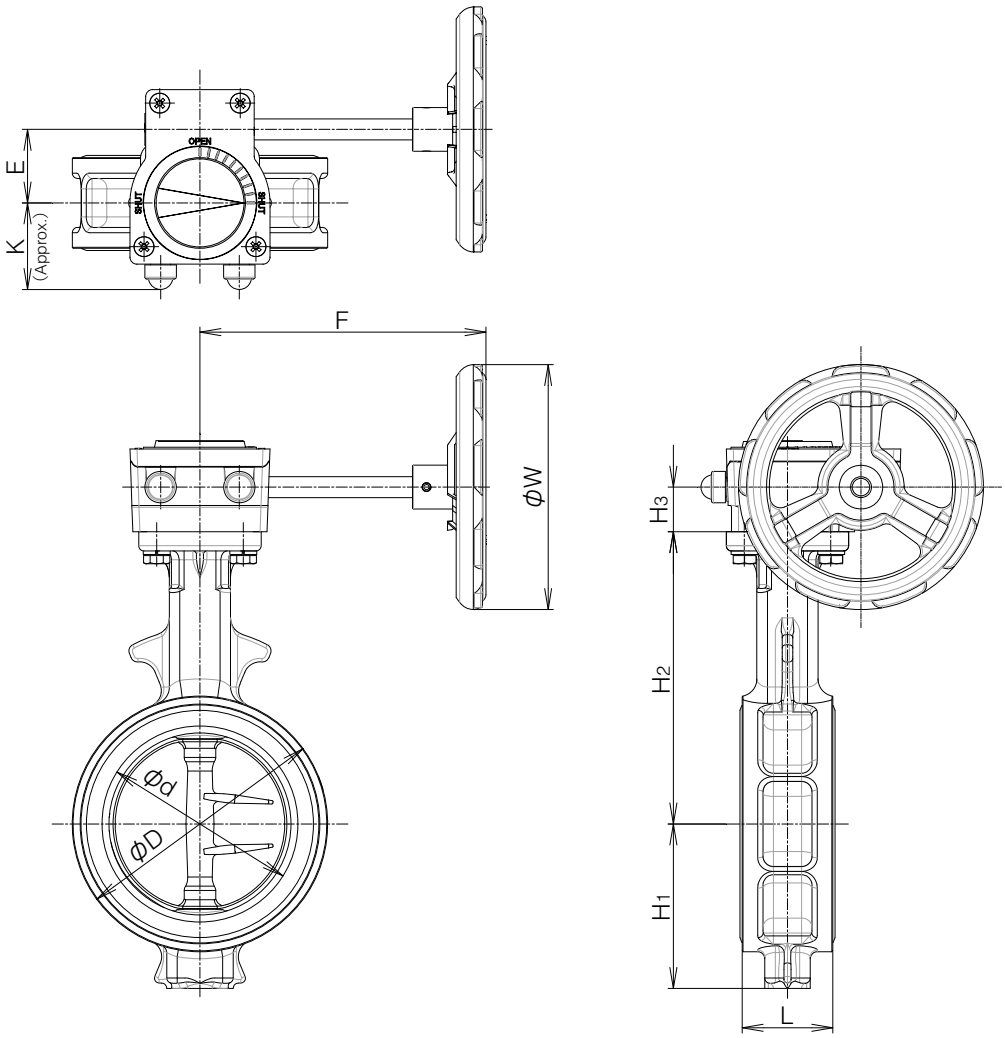

■2T Installation direction

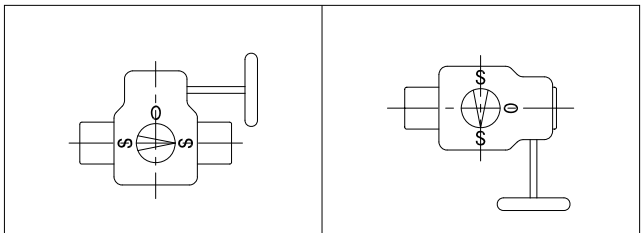

2TA (Standard)	2TB

700GB Cv value / pressure loss coefficient

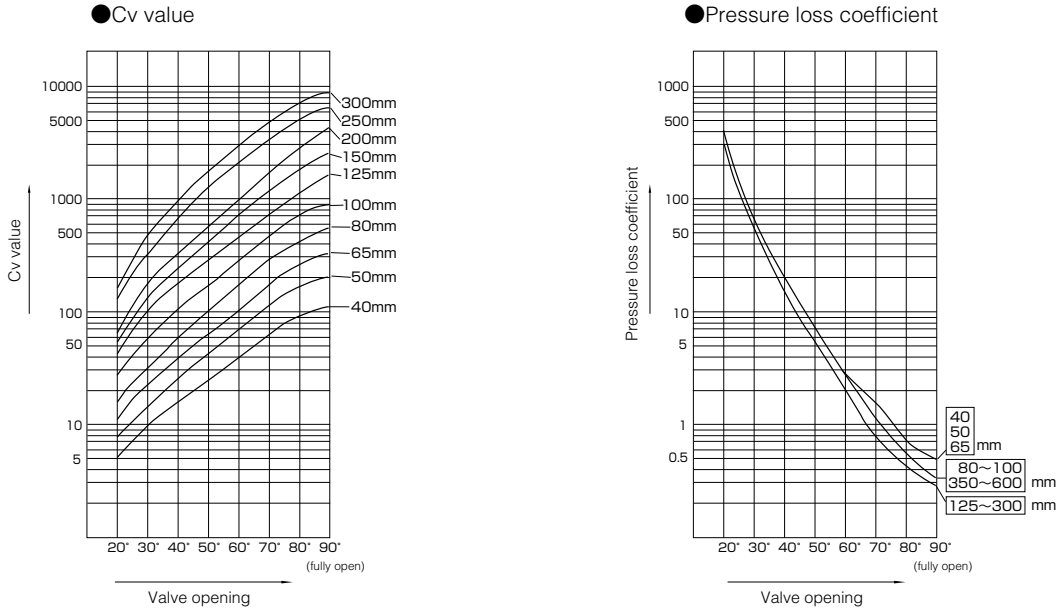

700GB Cv value

Nominal size		Valve opening							
mm	inch	20˚	30˚	40˚	50˚	60˚	70˚	80˚	90˚
40	1 1/2	5	9	16	25	39	61	95	121
50	2	8	15	25	40	64	103	160	200
65	2 1/2	12	25	41	64	102	162	260	320
80	3	15	33	57	95	163	271	450	580
100	4	27	58	100	162	269	444	749	880
125	5	45	109	189	295	453	719	1144	1590
150	6	60	148	262	423	685	1147	1897	2800
200	8	67	188	347	576	969	1698	2902	4300
250	10	130	351	675	1225	2125	3375	5091	6200
300	12	194	487	972	1764	3011	4966	7412	8900

700GB Pressure loss coefficient

Nominal size		Valve opening							
mm	inch	20˚	30˚	40˚	50˚	60˚	70˚	80˚	90˚
40	1 1/2	264	72	26	10	4	2	1.0	0.4
50	2	257	68	25	10	4	2	1.0	0.4
65	2 1/2	310	75	28	11	4	2	1.0	0.4
80	3	394	83	27	10	3	1	0.4	0.2
100	4	350	78	26	10	4	1	0.4	0.3
125	5	316	53	18	7	3	1	0.4	0.2
150	6	348	57	18	7	3	1	0.3	0.1
200	8	849	106	31	11	4	1	0.4	0.2
250	10	528	72	20	6	2	1	0.3	0.2
300	12	488	78	20	6	2	1	0.3	0.2

700GB Applicable Flange Standard

Nominal size		JIS		ASME B16.1 ASME B16.5		BS4504 DIN2632, DIN2633 GB/T9113.1			BS 10
mm	inch	5K	10K	Class125	Class150	PN6 PN0.6	PN10 PN1.0	PN16 PN1.6	Table E
40	1 1/2	○	○	○	○	○	○	○	○
50	2	○	○	○	○	○	○	○	○
65	2 1/2	○	○	○	○	○	○	○	△
80	3	○	○	◎	◎	◎	◎	◎	○
100	4	○	○	◎	◎	◎	◎	◎	○
125	5	○	○	◎	◎	○	◎	◎	○
150	6	○	○	○	○	×	○	○	○
200	8	○	○	◎	◎	○	◎	◎	○
250	10	○	○	○	○	×	○	×	○
300	12	○	○	◎	◎	○	◎	×	○

○ : Applicable without additional flange machining.
◎ : Applicable without additional flange machining. (Use ANSI body.)
△ : Applicable with additional flange machining.
× : Not applicable.

700GB Applicable pipe list

Nominal size		SGP	Sch20	Sch40	VP (TS flange)	Sch10S	Sch20S	Minimum internal diameter of piping (mm)
mm	inch							
40	1 1/2	○	—	○	○	○	○	25
50	2	○	○	○	○	○	○	34
65	2 1/2	○	○	○	○	○	○	51
80	3	○	○	○	○	○	○	70
100	4	○	○	○	○	○	○	91
125	5	○	○	○	○	○	○	118
150	6	○	○	○	○	○	○	144
200	8	○	○	○	○	○	○	194
250	10	○	○	○	○	○	○	246
300	12	○	○	○	○	○	○	295

Remark: The symbols above mean the following.
○: Applicable —: Not standardized

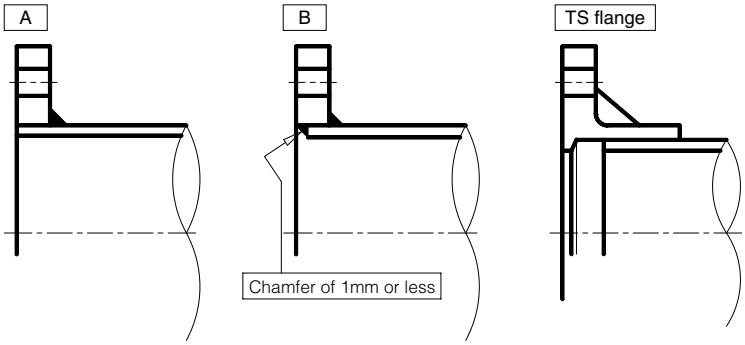

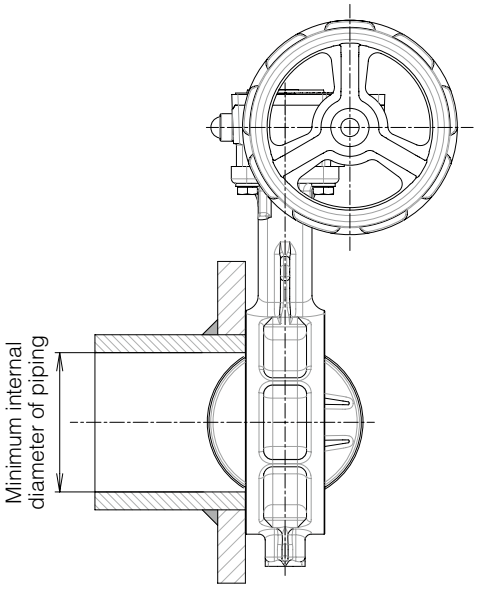

700GB Piping bolt and nut sizes

■Hexagon bolt & nut

Nominal size		JIS 5K	JIS 10K
mm	inch	Hexagon bolts and nuts	Hexagon bolts and nuts
40	1 1/2	4-M12× 75×30	4-M16× 90×38
50	2	4-M12× 90×30	4-M16×100×38
65	2 1/2	4-M12× 90×30	4-M16×105×38
80	3	4-M16× 95×38	8-M16×105×38
100	4	8-M16×105×38	8-M16×110×38
125	5	8-M16×110×38	8-M20×125×46
150	6	8-M16×115×38	8-M20×130×52
200	8	8-M20×130×52	12-M20×130×52
250	10	12-M20×140×52	12-M22×150×60
300	12	12-M20×150×52	16-M22×160×60

■Long bolt & nut

Nominal size		JIS 5K	JIS 10K	ASME Class 125/150
mm	inch	Long bolts and nuts	Long bolts and nuts	Long bolts and nuts
40	1 1/2	4-M12× 95×25	4-M16×110×25	4-U1/2 ×110×32
50	2	4-M12×105×25	4-M16×120×30	4-U5/8 ×140×38
65	2 1/2	4-M12×110×25	4-M16×125×30	4-U5/8 ×140×38
80	3	4-M16×120×30	8-M16×125×30	4-U5/8 ×140×38
100	4	8-M16×130×30	8-M16×130×30	8-U5/8 ×150×38
125	5	8-M16×130×30	8-M20×150×40	8-U3/4 ×160×51
150	6	8-M16×140×35	8-M20×155×40	8-U3/4 ×165×51
200	8	8-M20×155×40	12-M20×155×40	8-U3/4 ×175×51
250	10	12-M20×165×40	12-M22×175×45	12-U7/8 ×195×58
300	12	12-M20×175×40	16-M22×185×45	12-U7/8 ×205×58

Remarks:
1. Please use a hexagon nut with 80% threading. (For ANSI, use heavy nut.)
2. A unified screw should have 8 threads per inch if its nominal diameter exceeds 1 inch.
3. The bolt lengths are in accordance with thickness of steel flanges. In case of cast iron, plastic or lining flange, length of bolt may differ.

Example

Long bolts: 12 - M22 × 185 × 45
(N - M × L × S)

Setting bolts (Hexagon bolts): 4 - M30 × 95 × 65
(N - M × L × S)

Long bolts and nuts

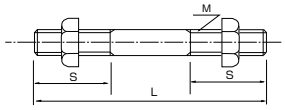

Setting bolts (Hexagon bolts)

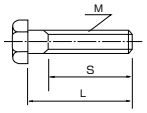

Vulcanized Rubber Lining on The Body for Use in High Pressure, High Velocity and Industrial Vacuum Applications

731P Wafer

732P Wafer

732Q Lugged

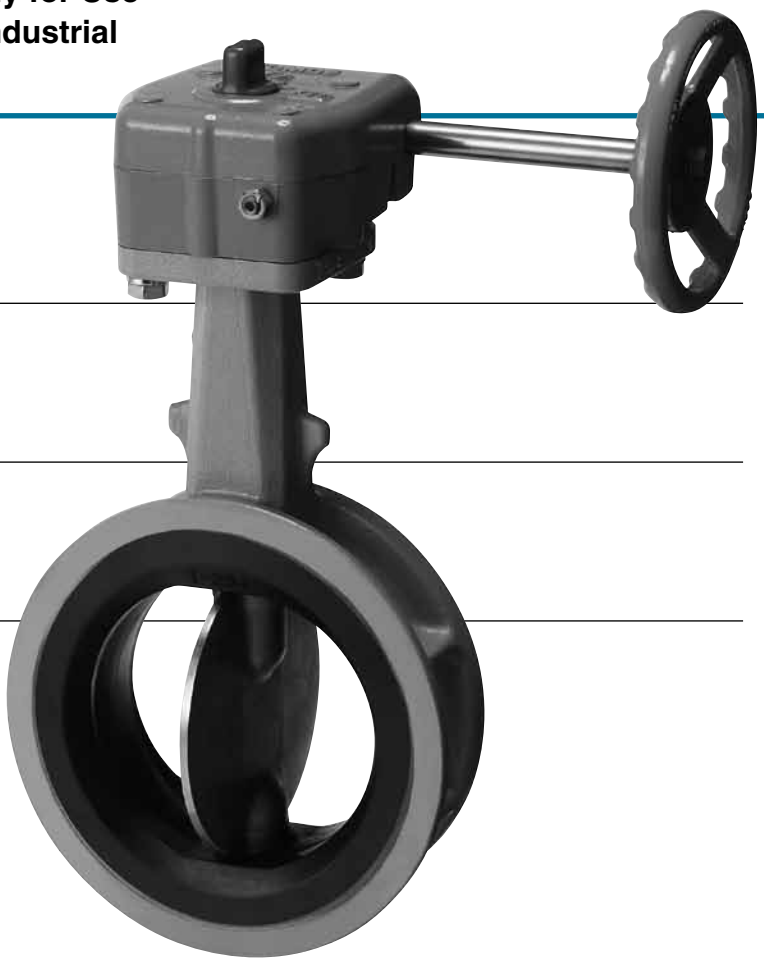

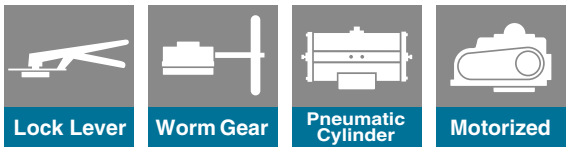

Features and Benefits

Vulcanized rubber lining on the body

The seat is vulcanized to the body which ensures correct rubber compression and greater strength of the rubber seat. This design is much more effective in high velocity and industrial vacuum applications than soft resilient seated valves.

New cosine-curve seat

The new cosine-curve seat (patent pending) allows better performance in reducing friction, torque and wear than the previous design.

Cubical shape by lowering height

The height of the raised part of the seat in the narrow area is lower. It provides strength and sealing performance by preventing the movement of the raised portion of the seat in high pressure applications.

Fig.1

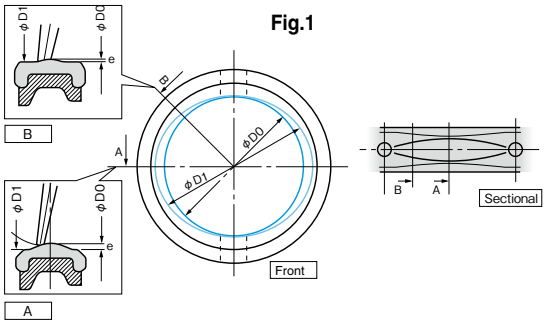

Tapered finish

To make the flow characteristic at small valve opening as close to linear as possible, the edge of the seat is tapered. This makes for a smoother flow and better performance in high velocity working conditions. The taper is narrow around the stem area and wide around the wing of the disc area to provide strength and sealing performance for the rubber seat.

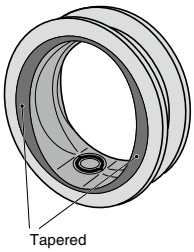

New streamlined shape around stem hole

Although the spherical disc provides good sealing performance and extended life for our rubber lined valves, it still produces relatively high forces around the stem hole area where a large contact surface exists. In order to produce greater pressure at this point of contact with less friction, we incorporate a labyrinth effect where six small raised lines are moulded around the stem hole.

Features a concentric design with tight 100% bi-directional shut-off, low torque and a maximum working pressure of 1.6MPa to 2.0MPa.

Tapered Finish

Fig. 2

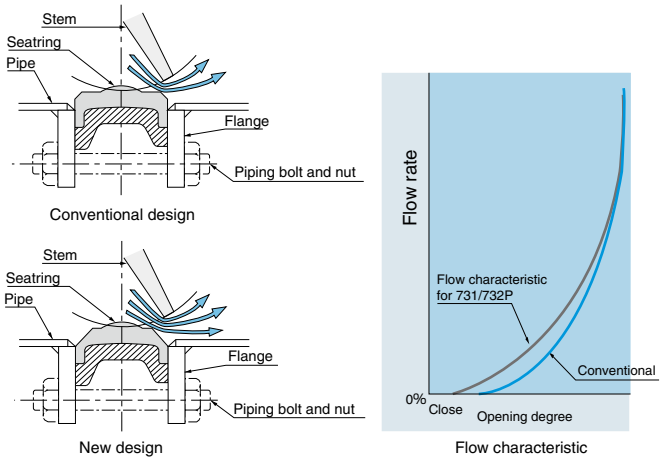

New streamline shape around stem hole

Fig. 3

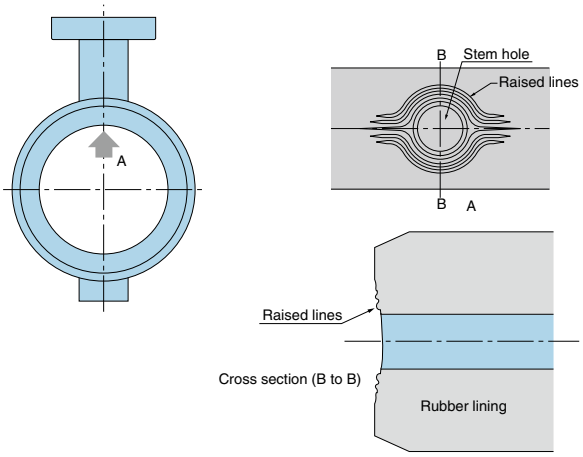

Standard Specifications

		1.6MPa (16K) type	2.0MPa (20K) type
Valve nominal size		731P (Wafer)	732P (Wafer)
		50mm to 300mm	50mm to 300mm
Applicable flange standard		JIS 10K /16K /20K ANSI 125 /150lb DIN NP 10 /16 /25 BS 4504 PN 10 /16 /25	
Face-to-face dimensions		JIS B 2002 (2032) 46 series / ISO 5752 (20 series) / BS5155	
Max. working pressure		1.6MPa	2.0MPa
Body shell test (hydraulic)		2.4MPa	3.0MPa
Seat leak test		1.76MPa	2.2MPa
Velocity range		Max. 6m/sec	
Vacuum condition		2.0 torr or over	
Working temperature range		NBR : -10 to 80 degrees C, *EPDM : -20 to 120 degrees C	
Working temperature in continuous use ※1		NBR : 0 to 60 degrees C, *EPDM : 0 to 70 degrees C	
Standard materials	Body	Ductile iron (FCD450 / A395), Carbon steel (SCPH2 / WCB)	
	Disc	Stainless steel, SCS14 / CF8M	
	Stem	420J2 S.S	
	Seat ring	NBR, *EPDM	
Actuators	Lock lever	50mm to 200mm	
	Worm gear	50mm to 300mm	50mm to 300mm
	Pneumatic cylinder		
	Motorised		
Coating		50mm to 300mm : Epoxy primer (Munsell N7)	

※1 'Working temperature in continuous use' stands for the temperature continuously kept exceeding one hour.
A resin column for condensation free applications is available.
Disc with pin finish is also available upon request for 732P.
Lug type is available with ANSI 125/150 lb. For other standards, please consult us.
* Never use an EPDM rubber seat ring if the valve is being used for oil or for a fluid containing even a slight amount of oil.

Ideal, Cost Effective Valve for Use in High Velocity, High Pressure and Industrial Vacuum Applications

731P Wafer

732P Wafer

732Q Lugged

752W Lugged





Features and Benefits

Perfect sealing against high pressure to 1.96MPa

By employing a cosine-curve design seat ring, the disc contacts simultaneously around the entire seat during closure which enables perfect sealing against pressures up to 1.96MPa. Perfect sealing is assured in high differential pressure, high velocity and vacuum applications. The operation torque for the valve is substantially reduced. Also, since the body is covered with the seat ring, it is never exposed to fluid.

No restrictions in direction of flow even for high differential pressures

With a concentric design and low operating torque, 731P/732P can perfectly seal pressures up to 1.96MPa or 1.57MPa for both directions.

Face-to-face dimensions satisfy ISO standards

The face-to-face dimensions satisfy BS 5155 and ISO 5752. It is also adaptable to many international flange standards.

Long neck

The long neck enables insulation of up to 50mm after installation of the valve.

O-ring case with self-aligning stem seal function

The stainless steel O-ring case (utility model) counteracts any stem displacement and shaft tilt caused during the operation of the valve under fluid pressure. Because this O-ring is never exposed to the fluid, it never erodes.

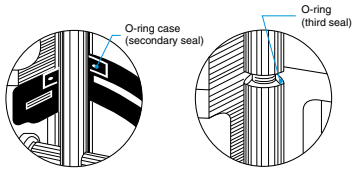

O-ring case (secondary seal) **O-ring (third seal)**

The rubber seat is reinforced with a metallic core

Since this reinforced seat ring is clamped in position by the flanges, it is much more effective in high velocity and industrial vacuum applications than a soft resilient seat without a metallic core. Moreover, the seat ring can easily be replaced (100 to 600mm types). The valcanized seat to the body is used in sizes 50 to 80mm.



Stainless steel disc as a standard material

Stainless steel disc provides excellent corrosion resistance in various applications.

General Description

With applications for high pressure service valves increasing, TOMOE have developed a new 20K type in addition to the traditional 16K type. The 20K type is designed to seal highpressures up to 2.0MPa, while the 16K type can seal up to 1.6MPa. This concentric butterfly valve incorporates a cosine-curve design seat ring reinforced with a metallic core and provides excellent cost advantages.

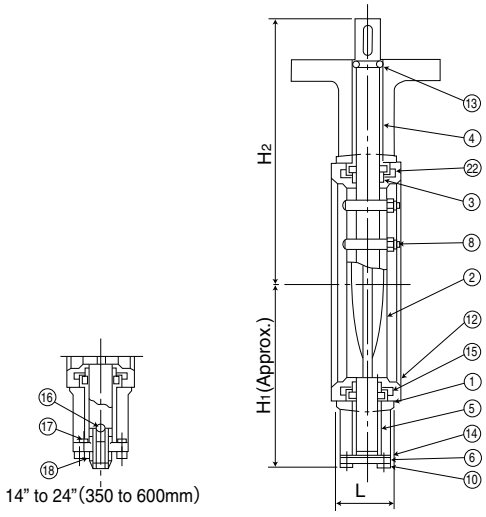

14" to 24"(350 to 600mm)

■Parts List(standard)

No.	Parts	Materials
1	Body	Ductile cast Iron
2	Disc	Stainless steel casting
3	Stem	Stainless steel
4	Bush	METALOPLAST
5		
6	Mild steel / ductile cast iron	Bottom cover
8	Taper bolt	Stainless steel
10	Bolt & SP. washer	Mild steel / high carbon steel
12	Seat ring	Elastomer
13	O-ring	Elastomer
14	Packing	Asbestos
15	O-ring	Elastomer
16	Ball	Steel
17	Bolt	Carbon steel
18	Lock nut	Mild steel
22	Core	Mild steel

Standard Specifications

		16K type	20K type
Valve nominal size		731P	732P
		350mm to 600mm	350mm to 600mm
Applicable flange standard		JIS 10K /16K /20K ANSI 125 /150lb DIN NP 10 /16 BS 4504 PN 10 /16	
Face-to-face dimensions		JIS B 2002 (2032) 46 series / ISO 5752 (20 series) / BS5155	
Max. working pressure		1.6MPa	2.0MPa
Body shell test (hydraulic)		2.4MPa	3.0MPa
Seat leak test		1.76MPa	2.2MPa
Velocity range		Max. 6m/sec (when fully open)	
Working temperature range		NBR : -10 to 80 degrees C, *EPDM : -20 to 120 degrees C	
Working temperature in continuous use ※1		NBR : 0 to 60 degrees C, *EPDM : 0 to 70 degrees C	
Standard materials	Body	Ductile iron (FCD450 / A395), Carbon steel (SCPH2 / WCB)	
	Disc	Stainless steel (SC13 / CF8, SCS14 / CF8M), Aluminium bronze (CAC702 / B148 C95400)	
	Stem	420J2 S.S	630 S.S
	Seat ring	NBR, *EPDM	
Actuators	Worm gear	350mm to 600mm	350mm to 600mm
	Pneumatic cylinder		
	Motorised		
Coating		Lacquer primer (munsell N7)	

※1 'Working temperature in continuous use' stands for the temperature continuously kept exceeding one hour.
* Never use an EPDM rubber seat ring if the valve is being used for oil or for a fluid containing even a slight amount of oil.
732Q/752W are available in lugged body versions with ANSI 150lb flange accommodation.

731P/732P Expanded view of components

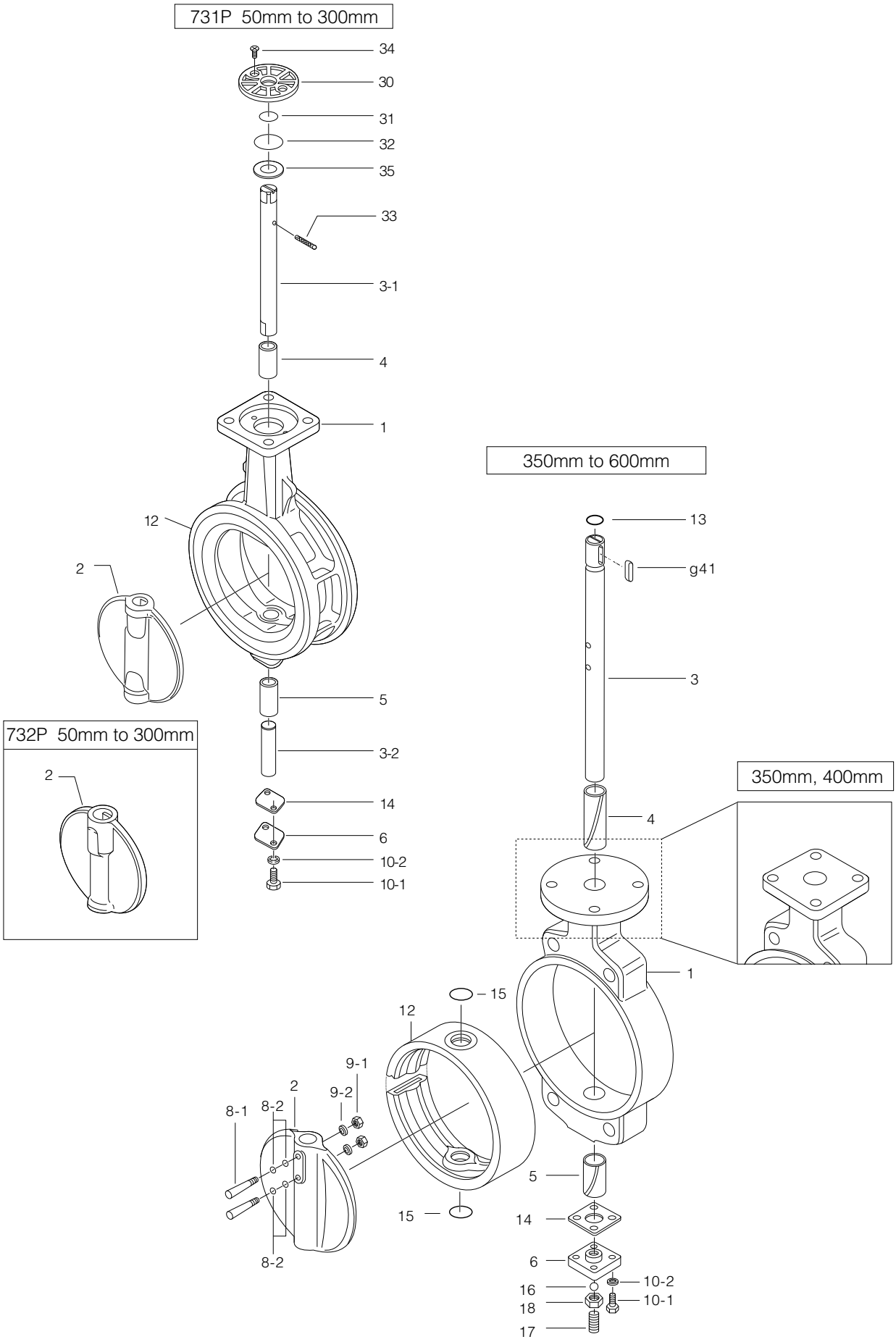

■731P Parts list（50mm to 300mm）

No.	Description	Q'ty	Remarks
★ 1	Body	1	
2	Disc	1	
3-1	Upper stem	1	
3-2	Lower stem	1	
★ 4	Bearing	1	
★ 5	Bearing	1	
6	Bottom cover	1	
10-1	Hexagon bolt	2	
10-2	Spring washer	2	
★ 12	Seat ring	1	Vulcanized to body
★ 14	Gasket	1	
★ 30	Bushing	1	
★ 31	O-ring	1	
★ 32	O-ring	1	
33	Spring pin	1	
34	Machine screw	2	
35	Plate	1	

■732P Parts list（50mm to 300mm）

No.	Description	Q'ty	Remarks
★ 1	Body	1	
2	Disc	1	
3-1	Upper stem	1	
3-2	Lower stem	1	
★ 4	Bearing	1	
★ 5	Bearing	1	
6	Bottom cover	1	
10-1	Hexagon bolt	2	
10-2	Spring washer	2	
★ 12	Seat ring	1	Vulcanized to body
★ 14	Gasket	1	
★ 30	Bushing	1	
★ 31	O-ring	1	
★ 32	O-ring	1	
33	Spring pin	1	
34	Machine screw	2	
35	Plate	1	

■731P/732P Parts list（350mm to 600mm）

No.	Description	Q'ty	Remarks
1	Body	1	
2	Disc	1	
3	Stem	1	
★ 4	Bushing	1	
★ 5	Bushing	1	
6	Bottom cover	1	
★ 8-1	Taper bolt	2	
★ 8-2	O-ring	4	
★ 9-1	Hexagon nut	2	
★ 9-2	Spring washer	2	
10-1	Hexagon bolt	4	
10-2	Stem key	4	
★ 12	Seat ring	1	
★ 13	O-ring	1	
14	Gasket	1	
★ 15	O-ring	2	
16	Ball	1	
17	Hollow bolt	1	
18	Lock nut	1	
g41	Key	1	

Remark: The ★ indicates recommended spare parts. They are supplied as "Seat ring set" with a small hexagonal spanner to remove hollow bolt (P.17).

731P Actuator selection chart

■731P

Model	Category	Size (mm / inch)													
		50	65	80	100	125	150	200	250	300	350	400	450	500	600
		2	2 1/2	3	4	5	6	8	10	12	14	16	18	20	24
1T	Standard / Heavy duty	1T-1				1T-2		1T-3							
2 I,2U 2S	Standard / Heavy duty	2 I -0		2 I -1		2 I -2		2 I -3		2 I -4	2U-5		MGH-3		MGH-4
7E,3A	Standard / Heavy duty	T35		T85		T200		T380	T750	T750	TGA-125		TGA-140	TGA-160	TGA-200
										TGA-125	TGA-140	TGA-160	TGA-180	TGA-200	TGA-250
7G,7F 3U,3K	Standard / Heavy duty	T85S		T200S	T200S	T380S	T750S	TG-12S		TG-14S			TG-20S		
			T200S		T380S										
4 I	Standard / Heavy duty	4 I-00 4 I-0		4 I-0	4 I-1	4 I-2		4 I-2.5	4 I-3		4 I-4				
4J,4L	Standard / Heavy duty	SRJ-010				SRJ-020		SRJ-060		LTKD-01 0.2kW /MGH-2	LTKD-01 0.4kW /MGH-3		LTKD-02 0.75kW /MGH-4		LTKD-05 0.75kW /MGH-5

Selection criteria		
	Standard	Select when none of the following heavy duty items apply.
	Heavy duty	Select when any of the following items apply. ①Powder or high viscosity fluid (crude oil, etc.) ②Control specification (with positioner) ③Emergency open valve or pipe dead end valve ④Air or Gas

731P Pressure-temperature rating

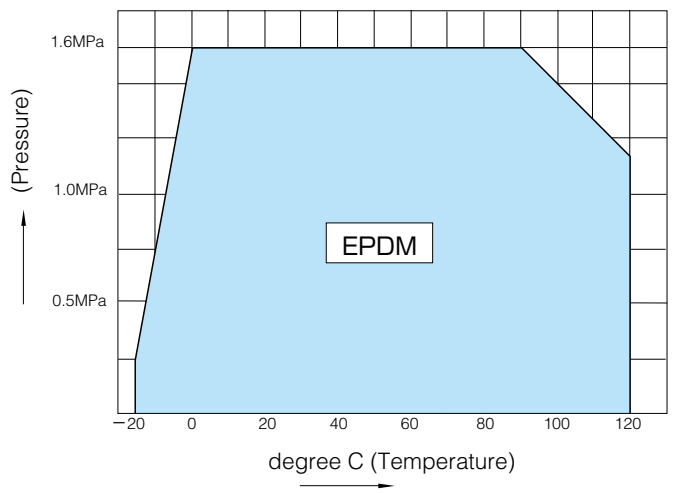

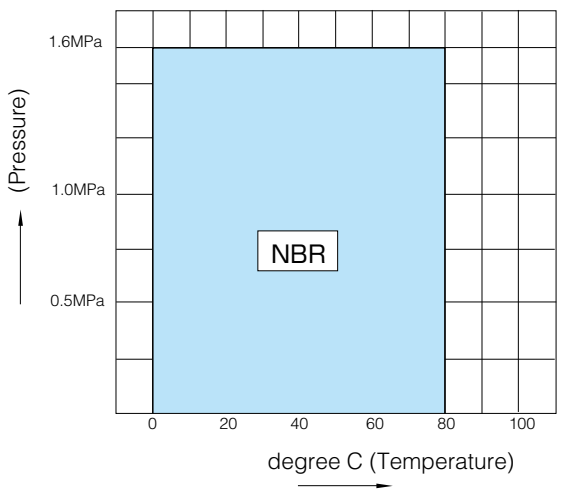

732P Actuator selection chart

■732P

Model	Category	Size (mm / inch)													
		50	65	80	100	125	150	200	250	300	350	400	450	500	600
		2	2 1/2	3	4	5	6	8	10	12	14	16	18	20	24
1T	Standard / Heavy duty	1T-1				1T-2		1T-3							
2 I,2U 2S	Standard / Heavy duty	2 I-0		2 I-1		2 I-2		2 I-3		2 I-4	2U-5		MGH-3	MGH-4	
7E, 3A	Standard / Heavy duty	T35		T85		T200	T380	T380	T750	Please consult us regarding selection of drive parts for 350mm and higher.					
								T750	TGA-125						
7G,7F 3U,3K	Standard / Heavy duty	T85S		T200S		T380S	T750S	TG-10S	TG-12S						
								TG-12S	TG-14S						
4 I	Standard / Heavy duty	4 I-00 4 I-0		4 I-0		4 I-1	4 I-2	4 I-3							
4J,4L	Standard / Heavy duty	SRJ-010				SRJ-020		SRJ-060	LTKD-01 0.2kW /MGH-2						

Selection criteria		
	Standard	Select when none of the following heavy duty items apply.
	Heavy duty	Select when any of the following items apply. ①Powder or high viscosity fluid (crude oil, etc.) ②Control specification (with positioner) ③Emergency open valve or pipe dead end valve ④Air or Gas

732P Pressure-temperature rating

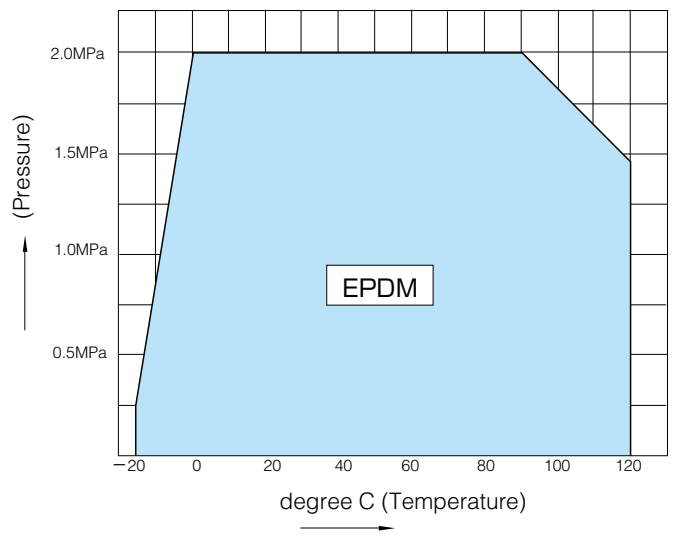

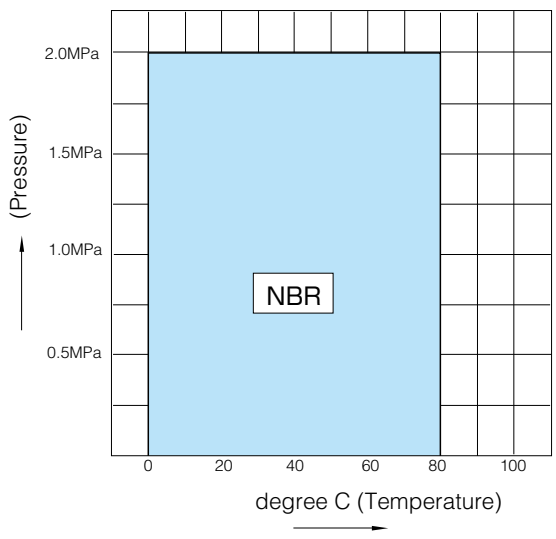

Bare shaft 731P-01(50mm to 300mm)/ 731P-02(350mm, 400mm)

■731P-01(50mm to 300mm)/ 731P-02(350mm, 400mm)

Type	Nominal size		Dimension (mm)														Approx. Mass (kg)
	mm	inch	φd	φD JIS10K	φD JIS16K	L	H1	H2	a1	a2	□S1	φd2	b	t2	t	Flanges	
731P	50	2	54	102	102	43	68	138	21.5	10.5	8	10	—	—	11	F07	1.8
	65	2 1/2	67	122	122	46	79	151	21.5	10.5	8	10	—	—	11	F07	2.2
	80	3	82	132	138	46	86	156	22.5	11.5	10	12	—	—	11	F07	2.8
	100	4	103	157	163	52	103	167	22.5	11.5	12	14	—	—	11	F07	3.6
	125	5	129	188	200	56	118	191	27.5	16.5	14	16	—	—	13	F10	5.8
	150	6	152	218	235	56	135	202	27.5	16.5	14	18	—	—	13	F10	7.8
	200	8	198	267	280	60	177	227	29	20	18	22	—	—	13	F10	11.5
	250	10	251	330	353	68	216	280	34	30	24	28	—	—	14	F10	20.3
	300	12	300	375	403	78	254	312	35	30	24	32	—	—	16	F12	28.9
	350	14	336	415	415	78	304	340	54	48	—	40	12	3	20	F14	71
	400	16	390	477	477	102	343	380	65	59	—	46	14	3.5	20	F14	107

■Flange dimensions

Flange	□S	φC1	N	B.H.
F07	70	70	4	9
F10	102	102	4	11
F12	125	125	4	13
F14	140	140	4	19

Stem design	
	01: Square
	02: Round with key

■731P(16K) 50mm to 300mm

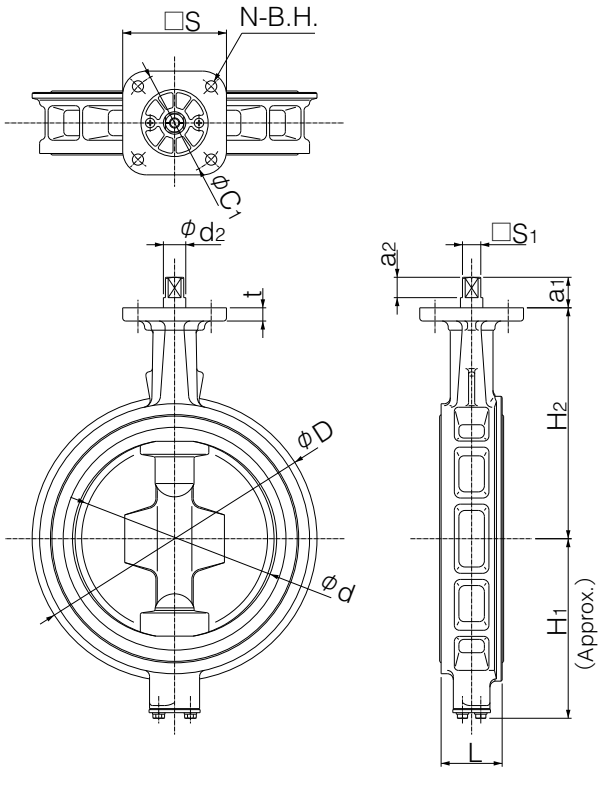

■731P(16K)350mm, 400mm

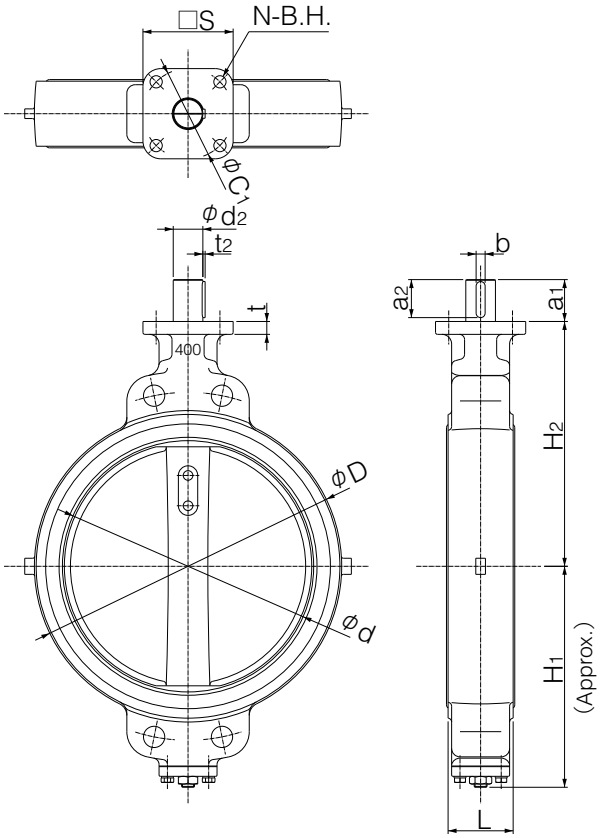

732Q Lugged type

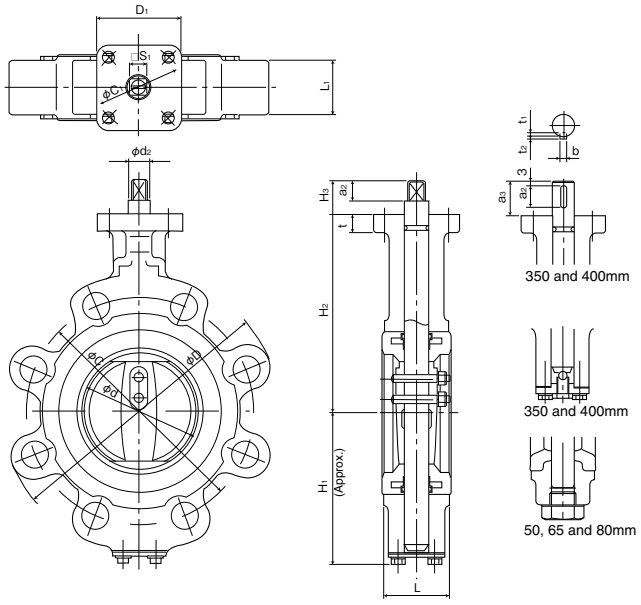

■Dimensions

Nominal size		Dimension (mm)																	Approx. Mass (kg)
mm	inch	φd	φD	L	L_1	H_1	H_2	H_3	$φd_2$	a_2	S_1	b	t_1	t_2	D_1	t	$φC_1$		
50	2	55	152	43	32	76	120	23	14	12	12	—	—	—	70	12	70		4
65	2 1/2	70	178	46	36	85	130	23	14	12	12	—	—	—	70	12	70		4.5
80	3	80	190	46	36	94	140	23	14	12	12	—	—	—	70	12	70		5.5
100	4	98	229	52	42	125	165	28	18	17	14	—	—	—	70	12	70		12
125	5	123	254	56	46	148	180	28	18	17	14	—	—	—	102	14	102		15
150	6	150	279	56	46	166	205	28	18	17	14	—	—	—	102	14	102		17
200	8	202	343	60	50	190	230	35	28	30	24	—	—	—	102	14	102		24.5
250	10	254	406	68	58	232	270	35	32	30	24	—	—	—	125	14	125		41
300	12	304	483	78	68	259	300	35	32	30	24	—	—	—	125	16	125		69.5
350	14	336	555	78	70	304	340	54	40	45	—	12	5	3	140	20	140		95
400	16	390	597	102	86	343	380	65	46	56	—	14	5.5	3.5	140	20	140		131

752W Lugged type

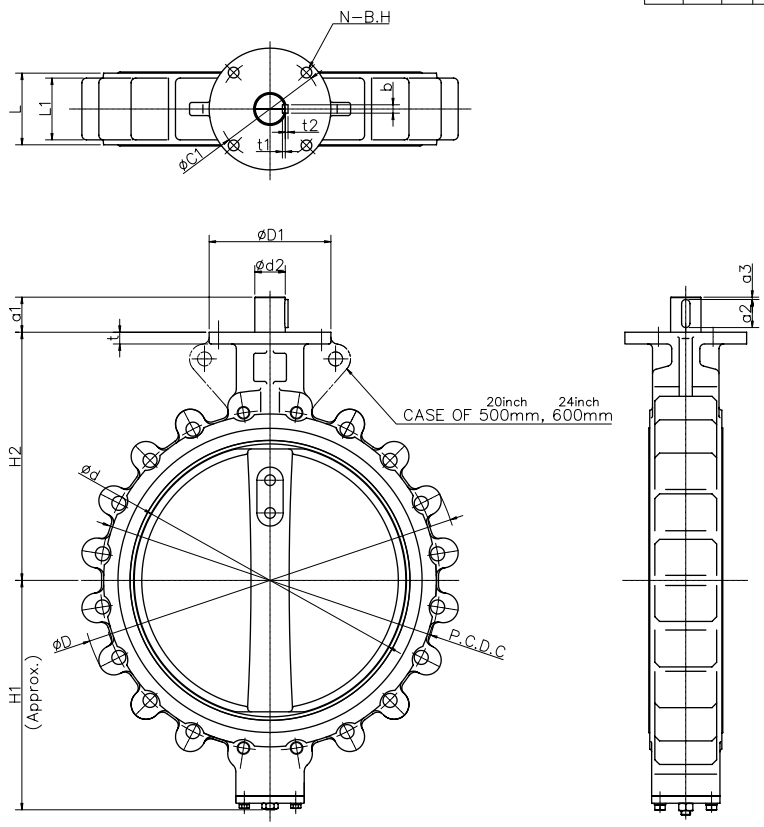

■Dimensions（ANSI 125/150Lb）

Nominal size		Dimension (mm)																		Approx. Mass (kg)
mm	inch	φd	φD	L	L_1	H_1	H_2	$φd_2$	a_1	a_2	a_3	b	t_1	t_2	t	$φD_1$	$φC_1$	N	B.H.	
450	18	439	635	113	94	379	420	47	60	50	3	12	4.5	3.5	20	200	170	4	19	120
500	20	490	698	126	109	422	450	47	60	50	3	12	4.5	3.5	20	200	170	4	19	170
600	24	583	813	153	132	494	530	65	75	60	5	12	6	6	25	260	220	4	23	255

Bare shaft 731P-02(450mm to 600mm)

■731P-02(450mm to 600mm)

Type	Nominal size		Dimension (mm)																Approx. Mass (kg)
	mm	inch	φd	φD JIS10K	φD JIS16K	L	H_1	H_2	a_1	a_2	$φd_2$	b	t_2	t	D_1	C_1	N	B.H.	
731P	450	18	439	532	532	114	379	420	60	53	47	12	3.5	20	200	170	4	19	137
	500	20	490	610	610	127	422	450	60	53	47	12	3.5	20	200	170	4	19	188
	600	24	583	826	720	154	494	530	75	65	65	18	6	25	260	220	4	23	318(348)

Remark: Value in brackets is for JIS 10K flanges.

■Flange dimensions

Flange	□S	$φC_1$	N	B.H.
F07	70	70	4	9
F10	102	102	4	11
F12	125	125	4	13
F14	140	140	4	19

■731P(16K)450mm to 600mm

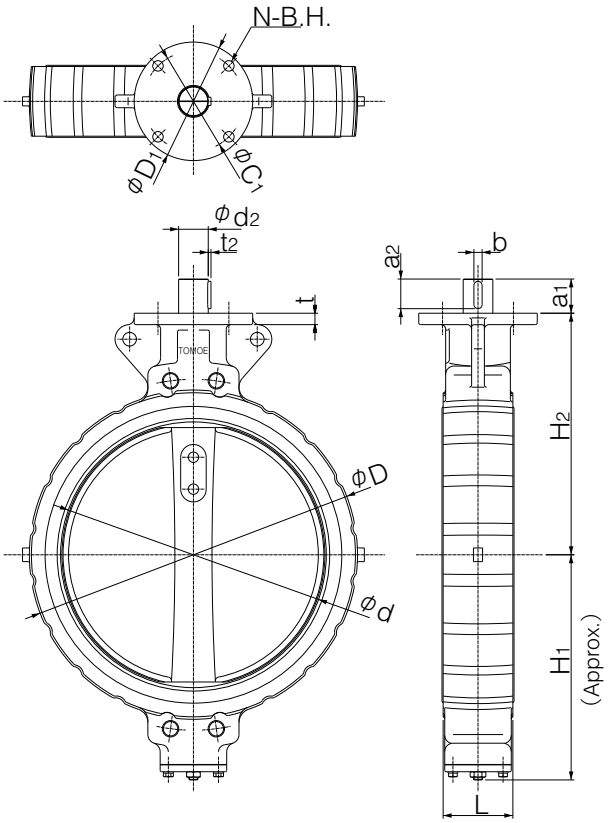

■731P(10K)600mm

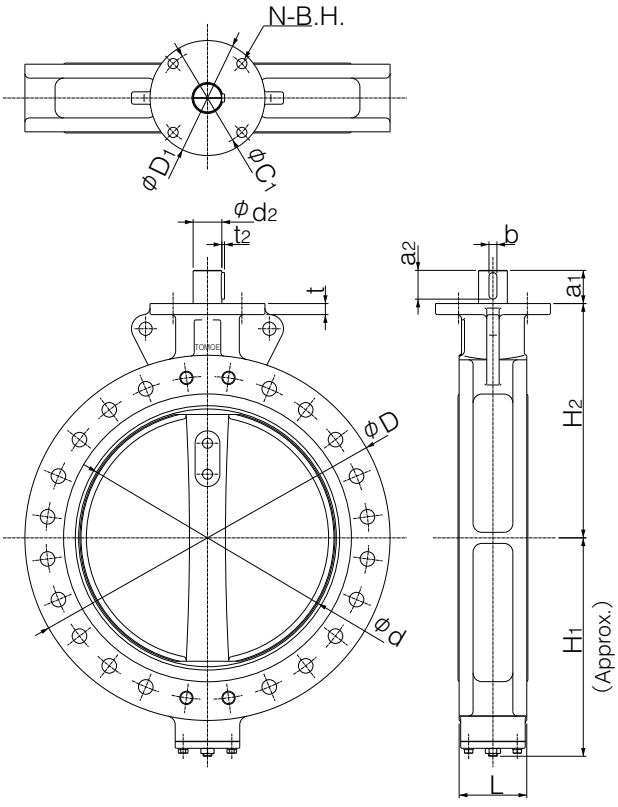

■732P-01(50mm to 300mm) / 732P-02(350mm, 400mm)

Type	Nominal size		Dimension (mm)													Approx. Mass (kg)
	mm	inch	φd	φD	L	H_1	H_2	a_1	a_2	□S_1	φd_2	b	t_2	t	Flange	
732P	50	2	54	102	43	68	138	21.5	10.5	8	10	—	—	11	F07	1.9
	65	2 1/2	67	122	46	79	151	21.5	10.5	8	10	—	—	11	F07	2.3
	80	3	82	138	46	86	156	22.5	11.5	10	12	—	—	11	F07	3
	100	4	103	163	52	103	167	22.5	11.5	12	14	—	—	11	F07	3.8
	125	5	129	200	56	118	191	27.5	16.5	14	16	—	—	13	F10	6.1
	150	6	152	235	56	135	202	27.5	16.5	14	18	—	—	13	F10	7.7
	200	8	198	280	60	177	227	29	20	18	22	—	—	13	F10	12.1
	250	10	251	353	68	216	280	34	30	24	28	—	—	14	F10	21
	300	12	300	403	78	254	312	35	30	24	32	—	—	16	F12	29
	350	14	336	415	78	304	340	54	48	—	40	12	3	20	F14	71
	400	16	390	477	102	343	380	65	59	—	46	14	3.5	20	F14	107

■Flange dimensions

Flange	□S	φC_1	N	B.H.
F07	70	70	4	9
F10	102	102	4	11
F12	125	125	4	13
F14	140	140	4	19

Stem design	
	01: Square
	02: Round with key

■732P-02(450mm to 600mm)

Type	Nominal size		Dimension (mm)															Approx. Mass (kg)
	mm	inch	φd	φD	L	H_1	H_2	a_1	a_2	φd_2	b	t_2	t	D_1	C_1	N	B.H.	
732P	450	18	439	532	114	379	420	60	53	47	12	3.5	20	200	170	4	19	137
	500	20	490	610	127	422	450	60	53	47	12	3.5	20	200	170	4	19	188
	600	24	583	720	154	494	530	75	65	65	18	6	25	260	220	4	23	318

■732P(20K) 50mm to 300mm

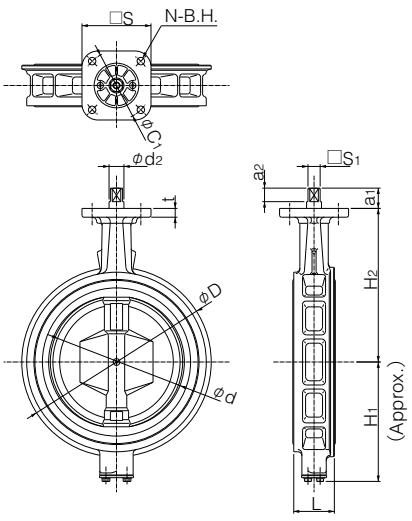

■732P(20K) 350mm, 400mm

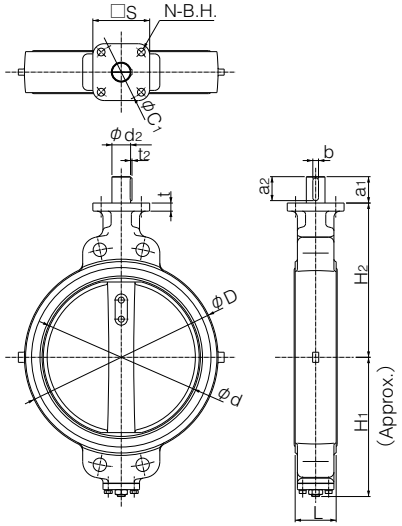

■732P(20K) 450mm to 600mm

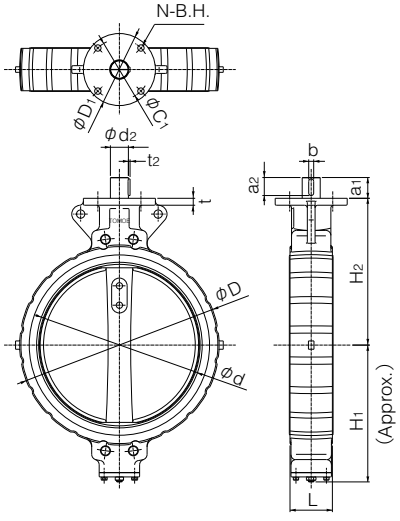

Lock lever type 732P-1T(50mm to 200mm)

■732P-1T

Nominal size		Dimension (mm)							Lever type	Approx. Mass (kg)
mm	inch	φd	φD	L	H_1	H_2	H_3	W		
50	2	54	102	43	68	138	66	200	1T-1	2.5
65	2 1/2	67	122	46	79	151	66	200	1T-1	2.9
80	3	82	138	46	86	156	66	200	1T-1	3.6
100	4	103	163	52	103	167	66	200	1T-1	4.4
125	5	129	200	56	118	191	92	300	1T-2	7.4
150	6	152	235	56	135	202	92	300	1T-2	9
200	8	198	280	60	177	227	97	350	1T-3	13.8

Lock lever type 731P-1T(50mm to 200mm)

■731P-1T

Nominal size		Dimension (mm)								Lever type	Approx. Mass (kg)
mm	inch	φd	φD		L	H_1	H_2	H_3	W		
			JIS10K	JIS16K							
50	2	54	102	102	43	68	138	66	200	1T-1	2.4
65	2 1/2	67	122	122	46	79	151	66	200	1T-1	2.8
80	3	82	132	138	46	86	156	66	200	1T-1	3.4
100	4	103	157	163	52	103	167	66	200	1T-1	4.2
125	5	129	188	200	56	118	191	92	300	1T-2	7.1
150	6	152	218	235	56	135	202	92	300	1T-2	9.1
200	8	198	267	280	60	177	227	97	350	1T-3	13.2

■732P/731P-1T

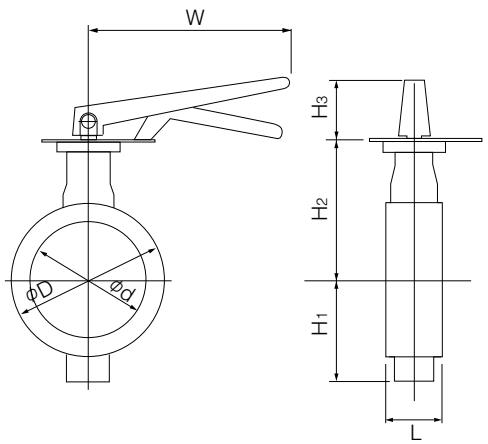

Worm gear type 732P-2I(50mm to 300mm) / 732P-2U(350mm, 400mm) / 732P-2S(450mm to 600mm)

■732P

Type	Nominal size		Dimension (mm)										Gear type	Approx. Mass (kg)
	mm	inch	φd	φD	L	H_1	H_2	H_3	E	K	F	W		
732P	50	2	54	102	43	68	138	24	28	35	83	70	2 I-0	2.4
	65	2 1/2	67	122	46	79	151	24	28	35	83	70	2 I-0	2.9
	80	3	82	138	46	86	156	27	46	48	145	100	2 I-1	4.2
	100	4	103	163	52	103	167	27	46	48	145	100	2 I-1	5
	125	5	129	200	56	118	191	30	53	51	160	125	2 I-2	8
	150	6	152	235	56	135	202	30	53	51	160	125	2 I-2	9.6
	200	8	198	280	60	177	227	36	71	65	208	200	2 I-3	16
	250	10	251	353	68	216	280	36	71	65	208	200	2 I-3	25
	300	12	300	403	78	254	312	38.5	71	65	193	200	2 I-4	34
	350	14	336	415	78	304	340	50	90	105	266	280	2U-5	90
	400	16	390	477	102	343	380	50	90	105	266	280	2U-5	126
	450	18	439	532	114	379	420	55	117	164	335	355	MGH-3	172
	500	20	490	610	127	422	450	55	117	164	335	355	MGH-3	222
	600	24	583	720	154	494	530	65	140	198	400	450	MGH-4	378

■732P-2 I/2U/2S

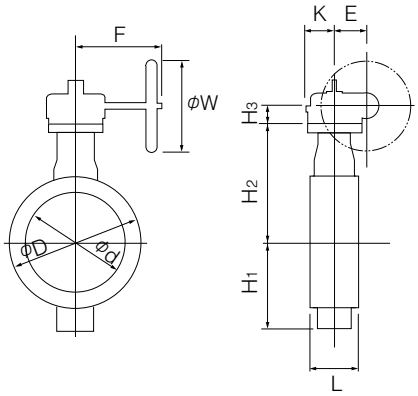

■2I Installation direction

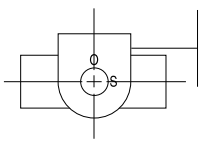

2 I A (standard)

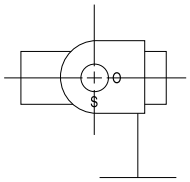

2 I B

■2U/2S Installation direction

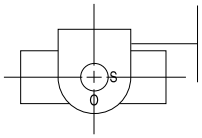

2 U A / 2 S A (standard)

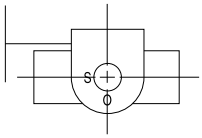

2 U AR / 2 S AR

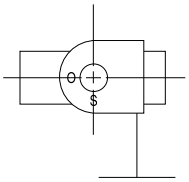

2 U B / 2 S B

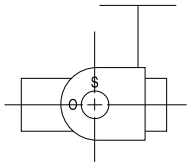

2 U BR / 2 S BR

Worm gear type 731P-2I(50mm to 300mm)/731P-2U(350mm, 400mm)/731P-2S(450mm to 600mm)

■732P

Type	Nominal size		Dimension (mm)										Gear type	Approx. Mass (kg)
	mm	inch	φd	φD JIS10K	φD JIS16K	L	H1	H2	H3	E	K	F	W		
731P	50	2	54	102	102	43	68	138	24	28	35	83	70	2I-0	2.4
	65	2 1/2	67	122	122	46	79	151	24	28	35	83	70	2I-0	2.8
	80	3	82	132	138	46	86	156	27	46	48	145	100	2I-1	4.1
	100	4	103	157	163	52	103	167	27	46	48	145	100	2I-1	4.8
	125	5	129	188	200	56	118	191	30	53	51	160	125	2I-2	7.7
	150	6	152	218	235	56	135	202	30	53	51	160	125	2I-2	9.7
	200	8	198	267	280	60	177	227	36	71	65	208	200	2I-3	15.5
	250	10	251	330	353	68	216	280	36	71	65	208	200	2I-3	24.3
	300	12	300	375	403	78	254	312	38.5	71	65	193	200	2I-4	34.1
	350	14	336	415	415	78	304	340	50	90	105	266	280	2U-5	90
	400	16	390	477	477	102	343	380	50	90	105	266	280	2U-5	126
	450	18	439	532	532	114	379	420	55	117	164	335	355	MGH-3	172
	500	20	490	610	610	127	422	450	55	117	164	335	355	MGH-3	222
	600	24	583	826	720	154	494	530	65	140	198	400	450	MGH-4	378(408)

Remark: Value in brackets is for JIS 10K flanges.

■731P-2 I/2U/2S

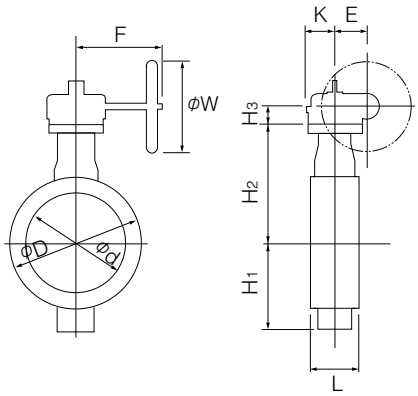

■2I Installation direction

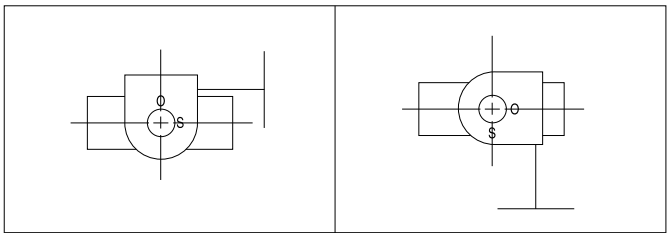

2IA (standard)	2IB

■2U/2S Installation direction

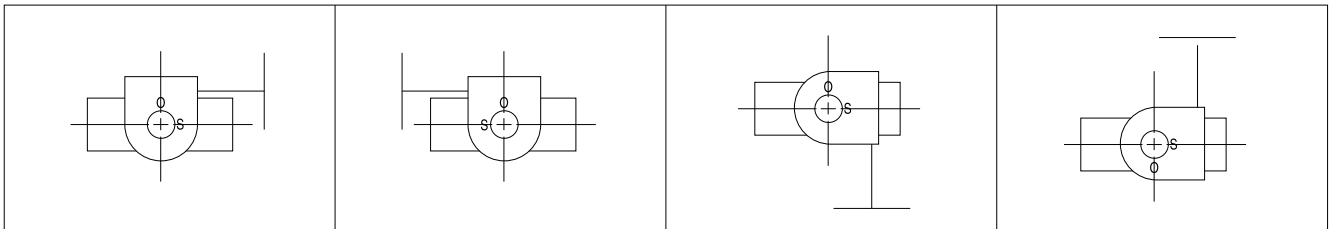

2UA/2SA (standard)	2UAR/2SAR	2UB/2SB	2UBR/2SBR

Double-acting pneumatic cylinder type 731P-7E(50mm to 300mm)

■Standard

Type	Nominal size		Dimension (mm)										Cylinder type	Approx. Mass (kg)
	mm	inch	φd	φD JIS10K	φD JIS16K	L	H1	H2	H3	A	P	f1	f2	
731P	50	2	54	102	102	43	68	138	125	228	116	57	29	T35	4
	65	2 1/2	67	122	122	46	79	151	125	228	116	57	29	T35	4
	80	3	82	132	138	46	86	156	125	228	116	57	29	T35	5
	100	4	103	157	163	52	103	167	168	276	142	75	47	T85	9
	125	5	129	188	200	56	118	191	203	346	176	79	57	T200	14
	150	6	152	218	235	56	135	202	203	346	176	79	57	T200	16
	200	8	198	267	280	60	177	227	231	423	214	91	69	T380	26
	250	10	251	360	353	68	216	280	231	423	214	91	69	T380	35
	300	12	300	375	403	78	254	312	269	546	270	118	85	T750	53

■Heavy duty

Type	Nominal size		Dimension (mm)										Cylinder type	Approx. Mass (kg)
	mm	inch	φd	φD JIS10K	φD JIS16K	L	H1	H2	H3	A	P	f1	f2	
731P	50	2	54	102	102	43	68	138	125	228	116	57	29	T35	4
	65	2 1/2	67	122	122	46	79	151	168	276	142	75	47	T85	7
	80	3	82	132	138	46	86	156	168	276	142	75	47	T85	8
	100	4	103	157	163	52	103	167	168	276	142	75	47	T85	9
	125	5	129	188	200	56	118	191	203	346	176	79	57	T200	14
	150	6	152	218	235	56	135	202	231	423	214	91	69	T380	22
	200	8	198	267	280	60	177	227	231	423	214	91	69	T380	26
	250	10	251	330	353	68	216	280	269	546	270	118	85	T750	45

Selection criteria		
	Standard	Select when none of the following heavy duty items apply.
	Heavy duty	Select when any of the following items apply. ①Powder or high viscosity fluid (crude oil, etc.) ②Control specification (with positioner) ③Emergency open valve or pipe dead end valve ④Air or Gas

■731P-7E

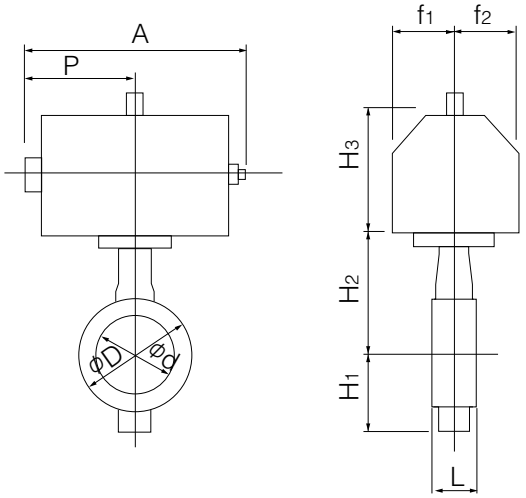

■7E Installation direction

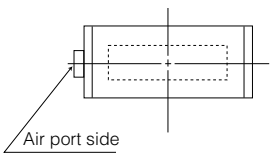

7 E A (standard)

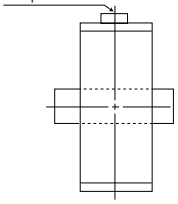

7 E B

Double-acting pneumatic cylinder type 731P-3A(300mm to 600mm)

■Standard

Type	Nominal size		Dimension (mm)										Cylinder type	Approx. Mass (kg)
	mm	inch	φd	φD JIS10K	φD JIS16K	L	H1	H2	H3	A	P	f1	f2		
731P	350	14	336	415	415	78	304	340	364	743	362	100	164	TGA-125	177
	400	16	390	477	477	102	343	380	364	743	362	100	164	TGA-125	228
	450	18	439	532	532	114	379	420	407	810	417	100	180	TGA-140	194
	500	20	490	610	610	127	422	450	435	939	483	130	202	TGA-160	294
	600	24	583	826	720	154	494	530	570	1163	599	160	253	TGA-200	537(567)

Remark: Value in brackets is for JIS 10K flanges.

■Heavy duty

Type	Nominal size		Dimension (mm)										Cylinder type	Approx. Mass (kg)
	mm	inch	φd	φD JIS10K	φD JIS16K	L	H1	H2	H3	A	P	f1	f2		
731P	300	12	300	375	403	78	254	312	359	743	362	100	164	TGA-125	74
	350	14	336	415	415	78	304	340	412	810	393	100	180	TGA-140	128
	400	16	390	477	477	102	343	380	465	939	456	130	202	TGA-160	208
	450	18	439	532	532	114	379	420	478	1053	543	130	218	TGA-180	289
	500	20	490	610	610	127	422	450	570	1163	599	160	253	TGA-200	402
	600	24	583	826	720	154	494	530	633	1381	707	160	299	TGA-250	635(665)

Remark: Value in brackets is for JIS 10K flanges.

Selection criteria		
	Standard	Select when none of the following heavy duty items apply.
	Heavy duty	Select when any of the following items apply. ①Powder or high viscosity fluid (crude oil, etc.) ②Control specification (with positioner) ③Emergency open valve or pipe dead end valve ④Air or Gas

■731P-3A

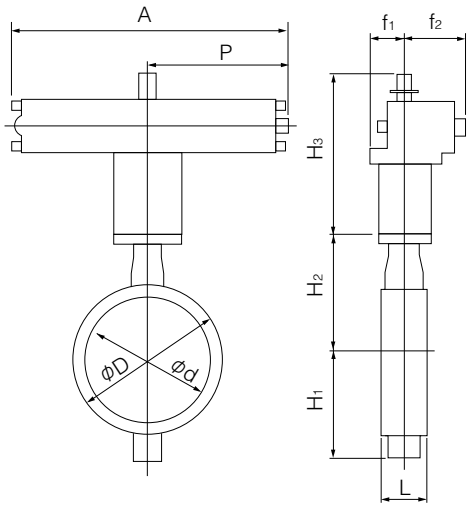

■3A Installation direction

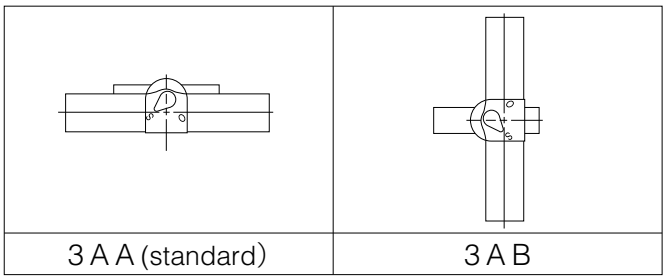

3 A A (standard)	3 A B

Single-acting pneumatic cylinder type 731P-7G(Air to open: 50mm to 200mm)/ 731P-7F(Air to close: 50mm to 200mm)

■Standard

Nominal size		Dimension (mm)											Cylinder type	Approx. Mass (kg)
mm	inch	φd	φD		L	H1	H2	H3	A	P	f1	f2		
			JIS10K	JIS16K										
50	2	54	102	102	43	68	138	168	364	183	75	47	T85S	8
65	2 1/2	67	122	122	46	79	151	168	364	183	75	47	T85S	9
80	3	82	132	138	46	86	156	168	364	183	75	47	T85S	9
100	4	103	157	163	52	103	167	203	449	226	79	57	T200S	15
125	5	129	188	200	56	118	191	231	550	276	91	69	T380S	25
150	6	152	218	235	56	135	202	269	723	360	118	85	T750S	41
200	8	198	267	280	60	177	227	269	723	360	118	85	T750S	44

■Heavy duty

Nominal size		Dimension (mm)											Cylinder type	Approx. Mass (kg)
mm	inch	φd	φD		L	H1	H2	H3	A	P	f1	f2		
			JIS10K	JIS16K										
50	2	54	102	102	43	68	138	168	364	183	75	47	T85S	8
65	2 1/2	67	122	122	46	79	151	203	449	226	79	57	T200S	13
80	3	82	132	138	46	86	156	203	449	226	79	57	T200S	14
100	4	103	157	163	52	103	167	231	550	276	91	69	T380S	23
125	5	129	188	200	56	118	191	269	723	360	118	85	T750S	39
150	6	152	218	235	56	135	202	269	723	360	118	85	T750S	41

Selection criteria		
	Standard	Select when none of the following heavy duty items apply.
	Heavy duty	Select when any of the following items apply. ①Powder or high viscosity fluid (crude oil, etc.) ②Control specification (with positioner) ③Emergency open valve or pipe dead end valve ④Air or Gas

■731P-7F

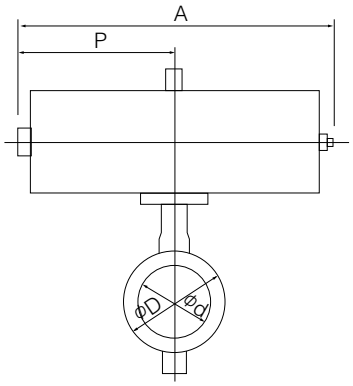

■731P-7G

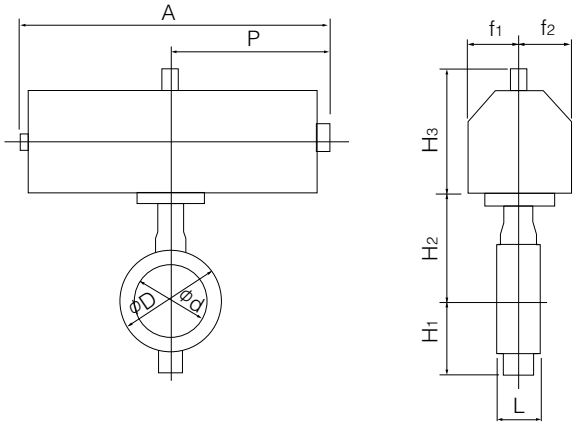

■7F Installation direction

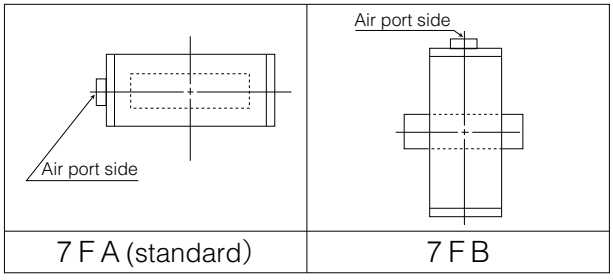

7 F A (standard)	7 F B

■7G Installation direction

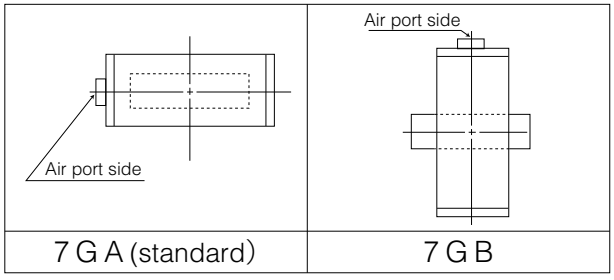

7 G A (standard)	7 G B

Single-acting pneumatic cylinder type 731P-3U(Air to open: 200mm to 600mm)/ 731P-3K(Air to close: 200mm to 600mm)

■Standard

Type	Nominal size		Dimension (mm)										Cylinder type	Approx. Mass (kg)
	mm	inch	φd	φD JIS10K	φD JIS16K	L	H1	H2	H3	A	P	f1	f2	
731P	200	8	198	267	280	60	177	227	307	945	585	70	165	TG-10S	62
	250	10	251	330	353	68	216	280	307	1080	720	94	206	TG-12S	121
	300	12	300	375	403	78	254	312	307	1080	720	94	206	TG-12S	130
	350	14	336	415	415	78	304	340	340	1255	865	131	257	TG-14S	269
	400	16	390	477	477	102	343	380	340	1255	865	131	257	TG-14S	305
	450	18	439	532	532	114	379	420	474	1655	1095	164	348	TG-20S	555
	500	20	490	610	610	127	422	450	474	1655	1095	164	348	TG-20S	606
	600	24	583	826	720	154	494	530	474	1655	1095	164	348	TG-20S	736 (766)

Remark: Value in brackets is for JIS 10K flanges.

■Heavy duty

Type	Nominal size		Dimension (mm)										Cylinder type	Approx. Mass (kg)
	mm	inch	φd	φD JIS10K	φD JIS16K	L	H1	H2	H3	A	P	f1	f2	
731P	200	8	198	267	280	60	177	227	307	1080	720	94	206	TG-12S	107
	250	10	251	330	353	68	216	280	307	1080	720	94	206	TG-12S	116
	300	12	300	375	403	78	254	312	340	1255	865	131	257	TG-14S	226
	350	14	336	415	415	78	304	340	340	1255	865	131	257	TG-14S	269
	400	16	390	477	477	102	343	380	474	1655	1095	164	348	TG-20S	519
	450	18	439	532	532	114	379	420	474	1655	1095	164	348	TG-20S	555
	500	20	490	610	610	127	422	450	474	1655	1095	164	348	TG-20S	606

Selection criteria		
	Standard	Select when none of the following heavy duty items apply.
	Heavy duty	Select when any of the following items apply. ①Powder or high viscosity fluid (crude oil, etc.) ②Control specification (with positioner) ③Emergency open valve or pipe dead end valve ④Air or Gas

■731P-3U

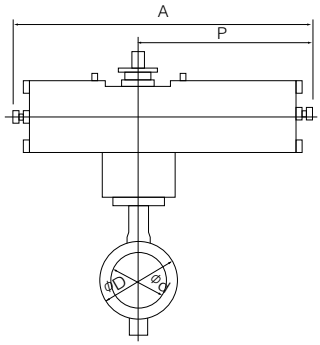

■731P-3K

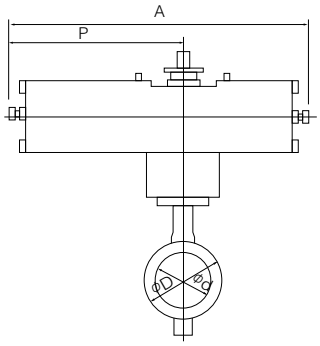

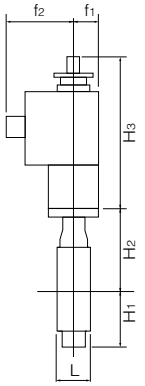

■3U Installation direction

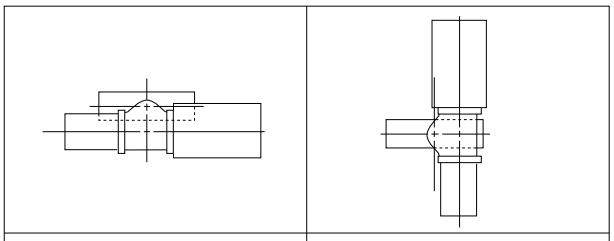

3UA (standard)	3UB

■3K Installation direction

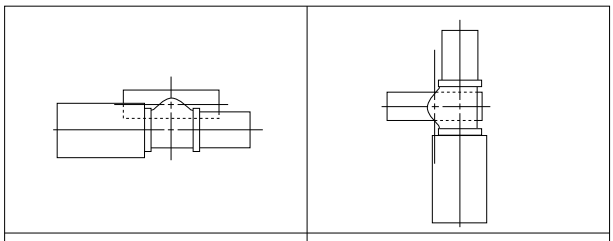

3KA (standard)	3KB

Single-acting pneumatic cylinder type 732P-3U(Air to open: 200mm to 300mm) / 732P-3K(Air to close: 200mm to 300mm)

■Standard

Nominal size		Dimension (mm)										Cylinder type	Approx. Mass (kg)
mm	inch	φd	φD	L	H_1	H_2	H_3	A	P	f_1	f_2		
200	8	198	280	60	177	227	307	945	585	70	165	TG-10S	68
250	10	251	353	68	216	280	307	1080	720	94	206	TG-12S	122
300	12	300	403	78	254	312	307	1080	720	94	206	TG-12S	130

■Heavy duty

Nominal size		Dimension (mm)										Cylinder type	Approx. Mass (kg)
mm	inch	φd	φD	L	H_1	H_2	H_3	A	P	f_1	f_2		
200	8	198	280	60	177	227	307	1080	720	94	206	TG-12S	112
250	10	251	353	68	216	280	340	1255	865	131	257	TG-14S	218
300	12	300	403	78	254	312	340	1255	865	131	257	TG-14S	226

Please consult us regarding selection of drive parts for 350mm and higher.

Selection criteria		
	Standard	Select when none of the following heavy duty items apply.
	Heavy duty	Select when any of the following items apply. ①Powder or high viscosity fluid (crude oil, etc.) ②Control specification (with positioner) ③Emergency open valve or pipe dead end valve ④Air or Gas

■732P-3U

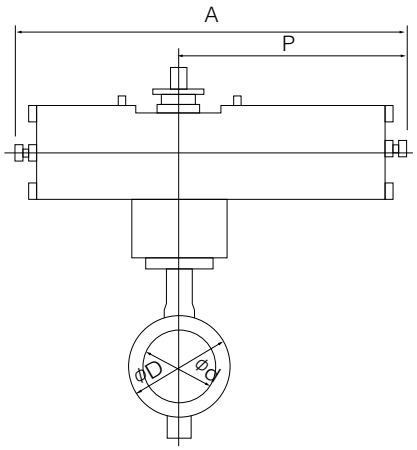

■732P-3K

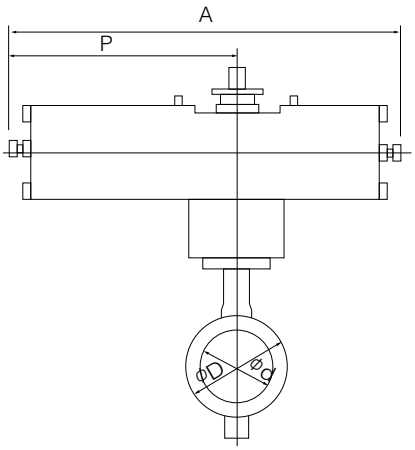

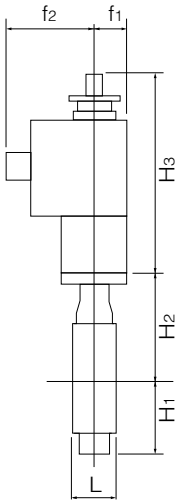

■3U Installation direction

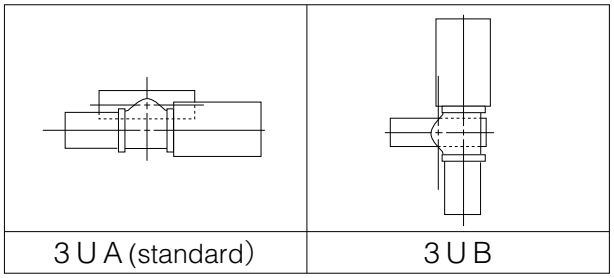

3 U A (standard)	3 U B

■3K Installation direction

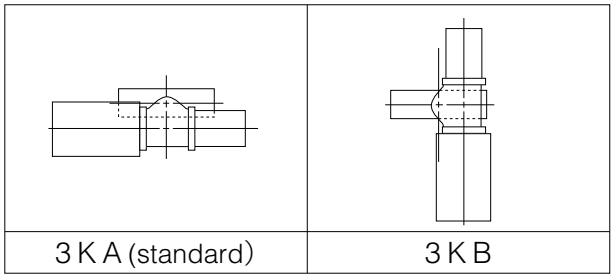

3 K A (standard)	3 K B

Single phase electric motor type 731P-4I(50mm to 400mm)

Type	Nominal size		Dimension (mm)										Motor type	Approx. Mass (kg)
	mm	inch	φd	φD JIS10K	φD JIS16K	L	H1	H2	H3	A	P	F	K		
731P	50	2	54	102	102	43	68	138	120	161	84	58	45	4I-00	4.3
									150	202	100	85	54	4I-0	6
	65	2 1/2	67	122	122	46	79	151	150	202	100	85	54	4I-0	6.4
	80	3	82	132	138	46	86	156	150	202	100	85	54	4I-0	7
	100	4	103	157	163	52	103	167	165	252	138	126	65	4I-1	10
	125	5	129	188	200	56	118	191	198	310	167	154	85	4I-2	17
	150	6	152	218	235	56	135	202	198	310	167	154	85	4I-2	19
	200	8	198	267	280	60	177	227	198	310	167	154	85	4I-2.5	24.3
	250	10	251	330	353	68	216	280	230	388	223	246	136	4I-3	43.5
	300	12	300	375	403	78	254	312	230	388	223	246	136	4I-3	52.1
	350	14	336	415	415	78	304	340	230	388	223	246	136	4I-4	100
	400	16	390	477	477	102	343	380	230	388	223	246	136	4I-4	136

Note 1: For nominal size 50 mm type (for control), the 4I-0 type should be selected. (The 4I-00 type is only designed for ON-OFF operation.)

■731P-4I

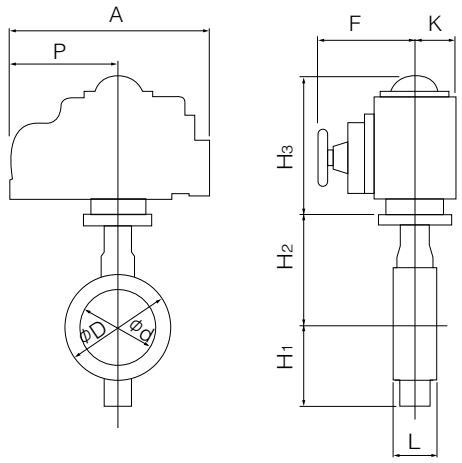

■4I Installation direction

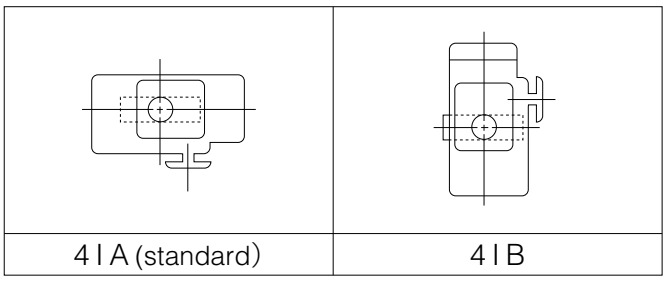

4IA (standard)	4IB

Single phase electric motor type 732P-4I(50mm to 300mm)

Nominal size		Dimension (mm)										Motor type	Approx. Mass (kg)
mm	inch	φd	φD	L	H_1	H_2	H_3	A	P	F	K		
50	2	54	102	43	68	138	120	161	84	58	45	4 I -00	4.4
							150	202	100	85	54	4 I-0	6.1
65	2 1/2	67	122	46	79	151	150	202	100	85	54	4 I-0	6.5
80	3	82	138	46	86	156	150	202	100	85	54	4 I-0	7.2
100	4	103	163	52	103	167	165	252	138	126	65	4 I-1	10.2
125	5	129	200	56	118	191	198	310	167	154	85	4 I-2	17.3
150	6	152	235	56	135	202	198	310	167	154	85	4 I-2	19.1
200	8	198	280	60	177	227	230	388	223	246	136	4 I-3	35.3
250	10	251	353	68	216	280	230	388	223	246	136	4 I-3	44.2
300	12	300	403	78	254	312	230	388	223	246	136	4 I-3	52.2

Note 1: For nominal size 50 mm type (for control), the 4I-0 type should be selected. (The 4I-00 type is only designed for ON-OFF operation.)
Please consult us regarding selection of drive parts for 350mm and higher.

■732P-4 I

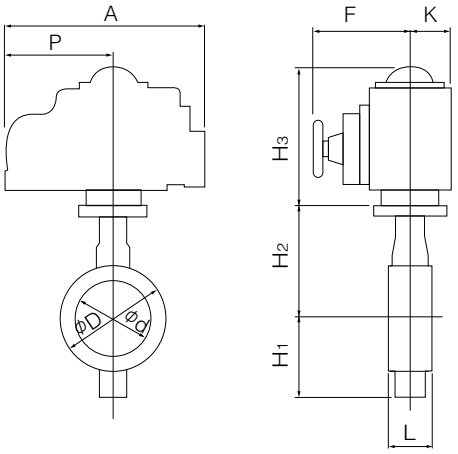

■4I Installation direction

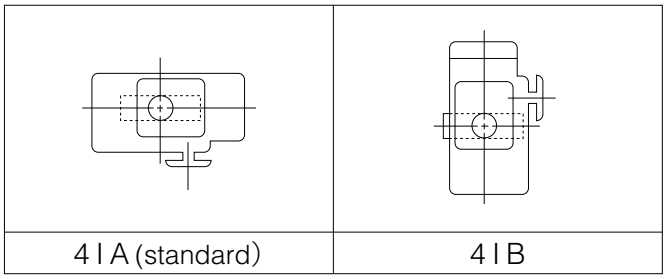

4 I A (standard)	4 I B

Three phase motor actuator type 731P-4L(300mm to 600mm)

Type	Nominal size		Dimension (mm)											Motor type	Approx. Mass (kg)
	mm	inch	φd	φD JIS10K	φD JIS16K	L	H1	H2	H3	E	K	F	M	P	
731P	300	12	300	375	403	78	254	312	435	85	126	498	357	230	LTKD-01 0.2kW /MGH-2	112
	350	14	336	415	415	78	304	340	487	117	164	533	373	230	LTKD-01 0.4kW /MGH-3	178
	400	16	390	477	477	102	343	380	487	117	164	533	373	230	LTKD-01 0.4kW /MGH-3	215
	450	18	439	532	532	114	379	420	538	140	198	594	400	230	LTKD-02 0.75kW /MGH-4	297
	500	20	490	610	610	127	422	450	538	140	198	594	400	230	LTKD-02 0.75kW /MGH-4	348
	600	24	583	826	720	154	494	530	604	210	293	748	440	360	LTKD-05 0.75kW /MGH-5	645 (675)

Remark: Value in brackets is for JIS 10K flanges.

■731P-4L

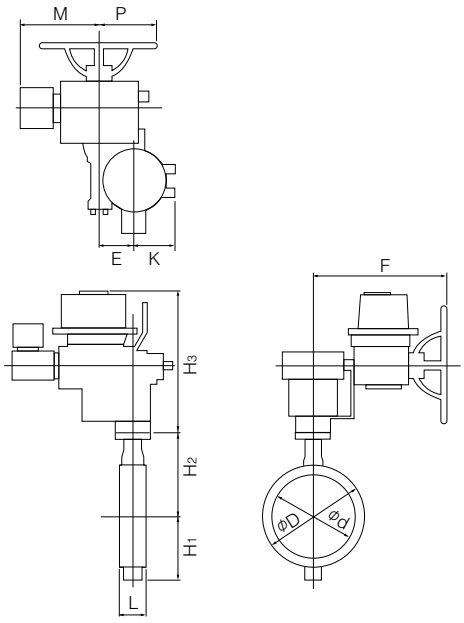

■4L Installation direction

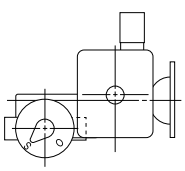

4 L A (standard)

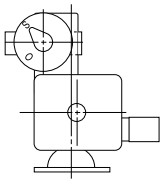

4 L B

Three phase motor actuator type 732P-4L(250mm, 300mm)

Nominal size		Dimension (mm)											Motor type	Approx. Mass (kg)
mm	inch	φd	φD	L	H_1	H_2	H_3	E	K	F	M	P		
250	10	251	353	68	216	280	435	85	126	498	357	230	LTKD-01 0.2kW /MGH-2	99
300	12	300	403	78	254	312	435	85	126	498	357	230	LTKD-01 0.2kW /MGH-2	110

Please consult us regarding selection of drive parts for 350mm and higher.

■732P-4L

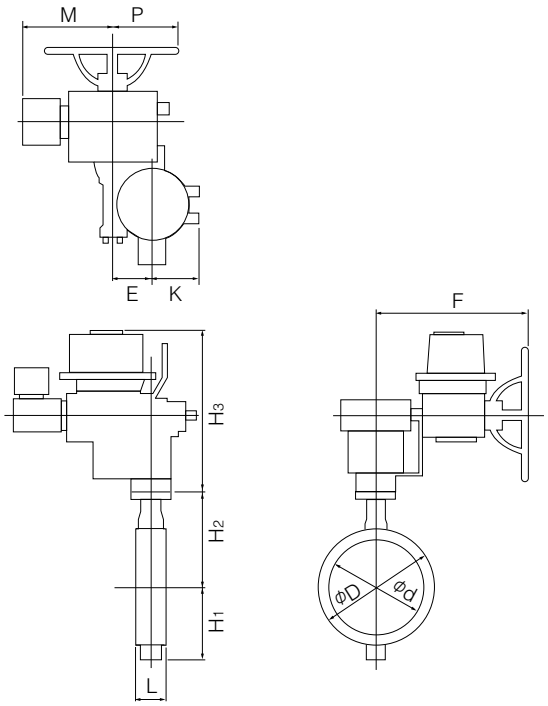

■4L Installation direction

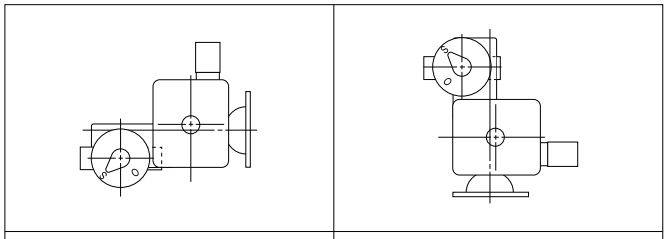

4 L A (standard)	4 L B

731P Cv value/Pressure loss coefficient

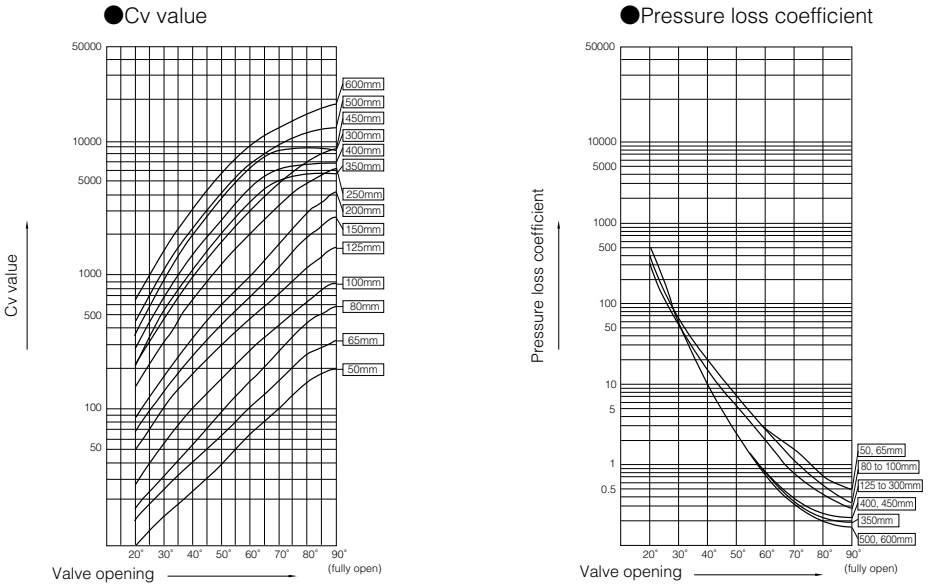

731P（50mm～600mm） Cv value

Type	Nominal size		Valve opening							
	mm	inch	20°	30°	40°	50°	60°	70°	80°	90°
731P	50	2	10	17	25	37	66	102	159	200
	65	2 1/2	16	27	41	64	103	162	260	320
	80	3	20	35	57	97	162	272	450	580
	100	4	32	62	103	164	276	431	628	880
	125	5	55	107	193	297	450	727	1150	1590
	150	6	71	145	264	439	671	1170	1910	2800
	200	8	96	189	344	606	957	1730	2940	4300
	250	10	174	340	707	1240	2160	3330	4880	6200
	300	12	254	491	1000	1780	3020	4910	7180	8900
	350	14	222	548	1101	1930	3080	4431	5451	5770
	400	16	289	717	1429	2515	3924	5482	6586	6920
	450	18	365	911	1807	3182	4953	6896	8262	8670
	500	20	457	1123	2265	3975	6395	9311	11571	12300
	600	24	664	1614	3307	5797	9328	13698	17243	18400

731P（50mm～600mm） Pressure loss coefficient

Type	Nominal size		Valve opening							
	mm	inch	20°	30°	40°	50°	60°	70°	80°	90°
731P	50	2	165	61	26	13	4	2	1	0.4
	65	2 1/2	162	58	24	10	4	2	1	0.4
	80	3	196	67	25	9	3	1	0.4	0.2
	100	4	233	61	22	9	3	1	0.6	0.3
	125	5	181	48	15	6	3	1	0.4	0.2
	150	6	222	53	16	6	2	1	0.3	0.1
	200	8	373	96	29	9	4	1	0.4	0.2
	250	10	270	71	16	5	2	1	0.3	0.2
	300	12	262	70	17	5	2	1	0.3	0.2
	350	14	579	95	24	8	3	1	1	1
	400	16	596	97	24	8	3	2	1	1
	450	18	609	98	25	8	3	2	1	1
	500	20	600	99	24	8	3	1	1	1
	600	24	603	102	24	8	3	1	1	1

732P Cv value/Pressure loss coefficient

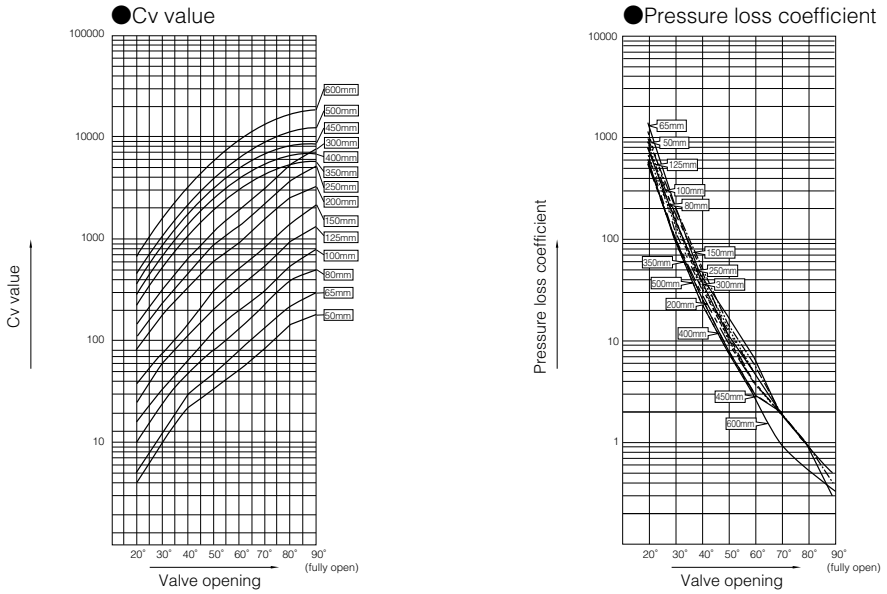

732P（50mm～600mm） Cv value

Type	Nominal size		Valve opening							
	mm	inch	20°	30°	40°	50°	60°	70°	80°	90°
731P	50	2	4	10	22	33	51	85	145	179
	65	2 1/2	5	13	30	48	79	129	220	293
	80	3	10	25	49	80	130	225	396	500
	100	4	16	33	65	125	200	311	539	772
	125	5	25	60	112	201	338	535	951	1295
	150	6	37	77	145	303	517	807	1400	2166
	200	8	79	178	335	592	906	1557	2573	3248
	250	10	110	238	460	876	1359	2217	3763	5153
	300	12	146	321	640	1192	1910	3147	5379	7546
	350	14	222	548	1101	1930	3080	4431	5451	5770
	400	16	289	717	1429	2515	3924	5482	6586	6920
	450	18	365	911	1807	3182	4953	6896	8262	8670
	500	20	457	1123	2265	3975	6395	9311	11571	12300
	600	24	664	1614	3307	5797	9328	13698	17243	18400

732P（50mm～600mm） Pressure loss coefficient

Type	Nominal size		Valve opening							
	mm	inch	20°	30°	40°	50°	60°	70°	80°	90°
731P	50	2	1132	170	35	15	6	2	1	0.5
	65	2 1/2	1389	225	45	18	7	2	1	0.5
	80	3	896	124	33	13	5	2	1	0.3
	100	4	971	214	56	15	6	2	1	0.4
	125	5	887	154	44	14	5	2	1	0.3
	150	6	801	189	53	12	4	2	1	0.3
	200	8	549	108	31	10	4	2	1	0.3
	250	10	675	145	39	11	4	2	1	0.3
	300	12	790	164	41	12	5	2	1	0.3
	350	14	579	95	24	8	3	1	1	1
	400	16	596	97	24	8	3	2	1	1
	450	18	609	98	25	8	3	2	1	1
	500	20	600	99	24	8	3	1	1	1
	600	24	603	102	24	8	3	1	1	1

731P Applicable flange standard

Type	Nominal size		JIS		ANSI	BS4504		DIN	
	mm	inch	10K	16K	150Lb	PN10	PN16	NP10	NP16
731P	50	2	○	○	○	○	○	○	○
	65	2 1/2	○	○	○	○	○	○	○
	80	3	△	○	△	○	○	○	○
	100	4	△	○	○	○	○	○	○
	125	5	△	○	△	△	△	△	△
	150	6	△	○	△	△	△	△	△
	200	8	△	○	△	△	△	△	△
	250	10	△	○	△	△	△	△	△
	300	12	△	○	○	△	△	△	△
	350	14	D	D	D	D	D	D	D
	400	16	D	D	D	D	D	D	D
	450	18	D	D	D	D	D	D	D
	500	20	D	D	D	D	D	D	D
	600	24	T	T	T	D	T	D	T

○ : Can be used without flange drilling.
△ : With additional flange drilling.
D : With flange drilling.
T : With flange tapping.

732P Applicable flange standard

Type	Nominal size		JIS 20K	DIN NP25
	mm	inch		
732P	50	2	○	○
	65	2 1/2	○	○
	80	3	○	○
	100	4	○	○
	125	5	○	○
	150	6	○	△
	200	8	○	○
	250	10	○	△
	300	12	○	△
	350	14	D	D
	400	16	D	D
	450	18	D	D
	500	20	D	D
	600	24	T	T

○ : Can be used without flange drilling.
△ : With additional flange drilling.
D : With flange drilling.
T : With flange tapping.

731P Applicable pipe list in case of A

Type	Nominal size		SGP	STPY	Sch20	Sch40	Sch10S	Sch20S	Minimum internal diameter of piping (mm)
	mm	inch							
731P	50	2	○	—	○	○	○	○	34
	65	2 1/2	○	—	○	○	○	○	51
	80	3	○	—	○	○	○	○	70
	100	4	○	—	○	○	○	○	91
	125	5	○	—	○	○	○	○	118
	150	6	○	—	○	○	○	○	144
	200	8	○	—	○	○	○	○	194
	250	10	○	—	○	○	○	○	246
	300	12	○	—	○	○	○	○	294
	350	14	○	○	○	○	—	—	332
	400	16	○	○	○	○	—	—	379
	450	18	○	○	○	○	—	—	428
	500	20	○	○	○	○	—	—	477
	600	24	—	○	○	○	—	—	569

731P Applicable pipe list in case of B

Type	Nominal size		SGP	STPY	Sch20	Sch40	Sch10S	Sch20S
	mm	inch						
731P	50	2	○	—	○	○	○	○
	65	2 1/2	○	—	○	○	○	○
	80	3	○	—	○	○	○	○
	100	4	○	—	○	○	○	○
	125	5	○	—	○	○	○	○
	150	6	○	—	○	○	○	○
	200	8	○	—	○	○	○	○
	250	10	○	—	○	○	○	○
	300	12	○	—	○	○	○	○
	350	14	○	○	○	○	—	—
	400	16	○	○	○	○	—	—
	450	18	○	○	○	○	—	—
	500	20	○	○	○	○	—	—
	600	24	—	○	○	○	—	—

Remark 1: ○=Applicable

Remark 2: Butterfly valves are inserted into a pipe that was fitted with the disc when fully open.
In cases where you are using a pipe or flange that is less than the minimum inner pipe diameter, use is still possible if means are taken such as inserting a spacer between the valve and flange.
For details, please consult us.

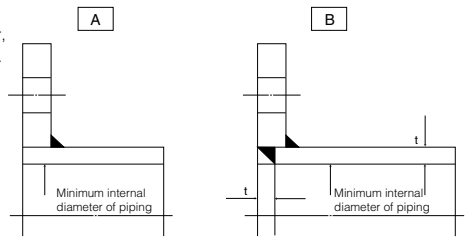

732P Applicable pipe list in case of A

Type	Nominal size		SGP	STPY	Sch20	Sch40	Sch20S	Minimum internal diameter of piping (mm)
	mm	inch						
732P	50	2	○	—	○	○	○	34
	65	2 1/2	○	—	○	○	○	51
	80	3	○	—	○	○	○	70
	100	4	○	—	○	○	○	91
	125	5	○	—	○	○	○	118
	150	6	○	—	○	○	○	144
	200	8	○	—	○	○	○	194
	250	10	○	—	○	○	○	246
	300	12	○	—	○	○	○	294
	350	14	○	○	○	○	—	332
	400	16	○	○	○	○	—	379
	450	18	○	○	○	○	—	428
	500	20	○	○	○	○	—	477
	600	24	—	○	○	○	—	569

732P Applicable pipe list in case of B

Type	Nominal size		SGP	STPY	Sch20	Sch40	Sch20S
	mm	inch					
732P	50	2	○	—	○	○	○
	65	2 1/2	○	—	○	○	○
	80	3	○	—	○	○	○
	100	4	○	—	○	○	○
	125	5	○	—	○	○	○
	150	6	○	—	○	○	○
	200	8	○	—	○	○	○
	250	10	○	—	○	○	○
	300	12	○	—	○	○	○
	350	14	○	○	○	○	—
	400	16	○	○	○	○	—
	450	18	○	○	○	○	—
	500	20	○	○	○	○	—
	600	24	—	○	○	○	—

Remark 1: ○=Applicable
Remark 2: Butterfly valves are inserted into a pipe that was fitted with the disc when fully open.
In cases where you are using a pipe or flange that is less than the minimum inner pipe diameter, use is still possible if means are taken such as inserting a spacer between the valve and flange.
For details, please consult us.

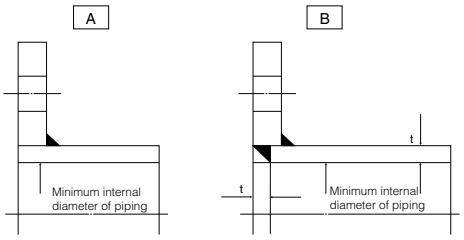

731P Piping bolt and nut sizes

■Hexagon bolt & nut

Type	Nominal size		JIS 10K		JIS 16K	
	mm	inch	Hexagon bolts	Setting bolts	Hexagon bolts	Setting bolts
731P	50	2	4-M16×105×40	—	8-M16× 95×35	—
	65	2 1/2	4-M16×105×40	—	8-M16×105×35	—
	80	3	8-M16×110×40	—	8-M20×110×35	—
	100	4	8-M16×110×40	—	8-M20×120×35	—
	125	5	8-M20×120×50	—	8-M22×130×40	—
	150	6	8-M20×130×50	—	12-M22×130×40	—
	200	8	12-M20×135×50	—	12-M22×140×40	—
	250	10	12-M22×150×60	—	12-M24×155×50	—
	300	12	16-M22×160×60	—	16-M24×170×50	—
	350	14	16-M22×160×60	—	16-M30(P3)×180×55	—
	400	16	16-M24×190×45	—	16-M30(P3)×215×55	—
	450	18	20-M24×205×45	—	20-M30(P3)×230×55	—
	500	20	20-M24×215×45	—	20-M30(P3)×245×55	—
	600	24	20-M30×260×50	8-M30× 70×60	20-M36(P3)×285×65	8-M36(P3)×85

■Long bolt & nut

Type	Nominal size		JIS 10K		JIS 16K	
	mm	inch	Long bolts and nuts	Setting bolts	Long bolts and nuts	Setting bolts
731P	50	2	4-M16×120×30	—	8-M16×125	—
	65	2 1/2	4-M16×125×30	—	8-M16×125	—
	80	3	8-M16×125×30	—	8-M20×135	—
	100	4	8-M16×130×30	—	8-M20×150	—
	125	5	8-M20×150×40	—	8-M22×165	—
	150	6	8-M20×150×40	—	12-M22×165	—
	200	8	12-M20×160×40	—	12-M22×170	—
	250	10	12-M22×170×45	—	12-M24×190	—
	300	12	16-M22×185×45	—	16-M24×210	—
	350	14	16-M22×185×45	—	16-M30(P3)×225	—
	400	16	16-M24×220×50	—	16-M30(P3)×260	—
	450	18	20-M24×235×50	—	20-M30(P3)×280	—
	500	20	20-M24×250×50	—	20-M30(P3)×295	—
	600	24	20-M30×300×60	8-M30×70×65	20-M36(P3)×340	8-M36(P3)×85

Example

Long bolts: 12 - M22 × 185 × 45
(N - M × L × S)

Setting blots: 4 - M30 × 95 × 65
(Hexagon bolts) (N - M × L × S)

Long bolts and nuts (full thread)



Setting bolts (Hexagon bolts)

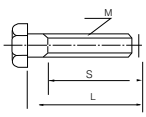

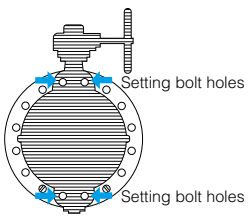

732P Piping bolt and nut sizes

Type	Nominal size		JIS 20K	
	mm	inch	Long bolts and nuts	Setting bolts
732P	50	2	8-M16×125	——
	65	2 1/2	8-M16×125	——
	80	3	8-M20×135	——
	100	4	8-M20×150	——
	125	5	8-M22×165	——
	150	6	12-M22×165	——
	200	8	12-M22×170	——
	250	10	12-M24×190	——
	300	12	16-M24×210	——
	350	14	16-M30(P3)×225	——
	400	16	16-M30(P3)×260	——
	450	18	20-M30(P3)×280	——
	500	20	20-M30(P3)×295	——
	600	24	20-M36(P3)×340	8-M36(P3)×90

Example

Long bolts: 12 - M22 × 185
(M, L, S)

Setting blots: 4 - M30 × 95 × 65
(Hexagon bolts) (N, M, L, S)

Long bolts and nuts (full thread)

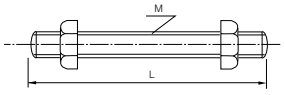

Setting bolts (Hexagon bolts)

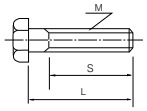

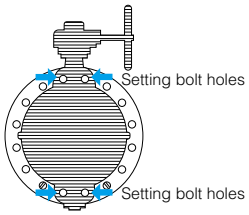

MEMO

16 BARg Rated Lugged Butterfly Valve for General Use

71LG



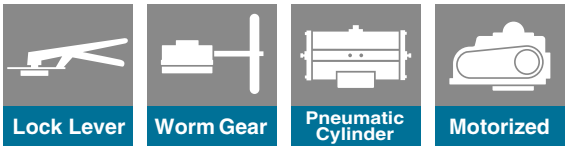



Features and Benefits

Lightweight disc design

The new disc design provides an ultra strong but lightweight disc, providing considerable weight reductions over competitive products.

Higher Cv values achieved

By minimising the thickness of the disc and keeping its surface smooth, higher Cv values are obtained. Pressure loss figures at the fully open position are significantly lower than those of our competitors.

Less torque

The disc edge design ensures reliable sealing and less torque properties.

Multi layered stem bearings

The multi layered stem bearings ensure that optimum torque figures are delivered and maintained.

Consistent sealing properties

The renowned TOMOE cosine seat design ensures reliable and consistent sealing at a fully rated 16 BARg pressure application.

Ease of maintenance

The field replaceable seat ring makes maintenance easy and reduces maintenance costs.

General Description

16 BARg rated lugged pattern butterfly valve.

Standard Specifications

Valve Type		Concentric Rubber Seated Butterfly Valve	
Model		71LG	
Body Style		Full Lugged and Wafer 1	
Valve Nominal Size	inch	2, 21/2, 3, 4, 5, 6, 8	10, 12, 14, 16, 18, 20, 24
	mm	50, 65, 80, 100, 125, 150, 200	250, 300, 350, 400, 450, 500, 600
Applicable Standards	Face-to-Face Dimensions	API 609 Category A, ISO 5752 (20 series)	
	Applicable Flange Accommodation	BS4504 PN16/PN10, DIN2633 PN16, DIN2632 PN10, GB/T9113.1 PN1.6/1.0, ASME B16.5 Class 150, ASME B16.1 Class 125, JIS10K, JPI class 150	BS4504 PN16/PN10, DIN2633 PN16, DIN2632 PN10, GB/T9113.1 PN1.6/1.0, ASME B16.5 Class 150, ASME B16.1 Class 125, JIS10/16K
	Top Flange Mounting	ISO5211-1	
Standard Materials	Body	Ductile iron, JIS FCD450	Ductile iron, ASTM A536 65-45-12
	Disc	Stainless steel, JIS SCS 14, FCD450+HALAR® Coating	Stainless steel, ASTM A351CF8, ASTM A536 65-45-12+HALAR® Coating
	Shaft	SUS420J2	
	Seat ring	NBR, EPDM	
Max. Working Pressure		1.6MPa	
Seat Leakage Rate		ISO5208 RateA (Zero leakage), API598	
Flow Direction		Bi-directional	
Working Temperature Range	Maximum	NBR: 0～60℃, EPDM: −10～80℃	
	Continuous Use	NBR: 0～50℃, EPDM: 0～70℃	
Test Pressures	Shell Test	2.4Mpa (Hydrostatic)	
	Seat Leakage Test	1.76Mpa (Hydrostatic)	
Operators		Lock lever, Worm gear, Electric Motor, Pneumatic cylinder	
Coating		Epoxy Primer Finish (Munsell N7)	

※1 Wafer type is available upon request
* Never use an EPDM rubber seat ring if the valve is being used for oil or for a fluid containing even a slight amount of oil.

Option: Anti-condensation column



The anti-condensation column is available as option. It is made of engineering plastic and prevent condensation occurred by transmission of cool temperature form flow media. No insulation is necessary around the gearbox. Compared to the conventional stainless steel column, the anti-condensation column is:

- **Lighter weight**
- **Better anti-heat-transmission results in better**
- **anti-condensation and smaller size**
- **Simple shape**
- **Easy installation**

With this column, valve operation would be much easier even if the pipe is covered with thick insulation material.

Dimensions - Bareshaft Valve

Nominal size		d	L	L1	H1	H2	S1	d2	a1	a2	a3	b	t	t1	t2	S	RE	C1	BH	Approx. Weight (kg)
mm	inch																			
50	2	56	43	33	85	138	8	10	21.5	10.5	11	-	12	-	-	70	10	70	9	2.5
65	2 1/2	69	46	36	94	151	8	10	21.5	10.5	11	-	12	-	-	70	10	70	9	3.5
80	3	84	46	36	109	156	10	12	22.5	11.5	11	-	12	-	-	70	10	70	9	4.0/4.8
100	4	104	52	42	117	167	12	14	22.5	11.5	11	-	12	-	-	70	10	70	9	6.7
125	5	130	56	46	143	191	14	16	27.5	16.5	11	-	14	-	-	102	23.5	102	11	8.8
150	6	153.5	56	46	164	202	14	18	27.5	16.5	11	-	14	-	-	102	23.5	102	11	10.4
200	8	199	60	50	176	227	18	22	30	20	10	-	14	-	-	102	23.5	102	11	14.5/16.3
250	10	253	68	60	216	280	24	28	35	30	5	-	14	-	-	102	24	102	11	36.4
300	12	302	78	68	254	312	24	32	35	30	5	-	16	-	-	125	32	125	13	50.8/51.3
350	14	337	79	70	278	348	-	32	48	40	5	10	20	5	3	140	28	140	19	69.3/65.1
400	16	394	102	90	338	383	-	40	54	45	6	12	20	5	3	140	28	140	19	105
450	18	441	114	102	368	413	-	46	65	56	6	14	20	5.5	3.5	140	28	140	19	149/123
500	20	492	127	115	403	453	-	50	79	70	6	14	25	5.5	3.5	140	28	140	19	186
600	24	584	154	142	458	528	-	55	79	70	6	16	25	6	4	165	28	165	23	291/313

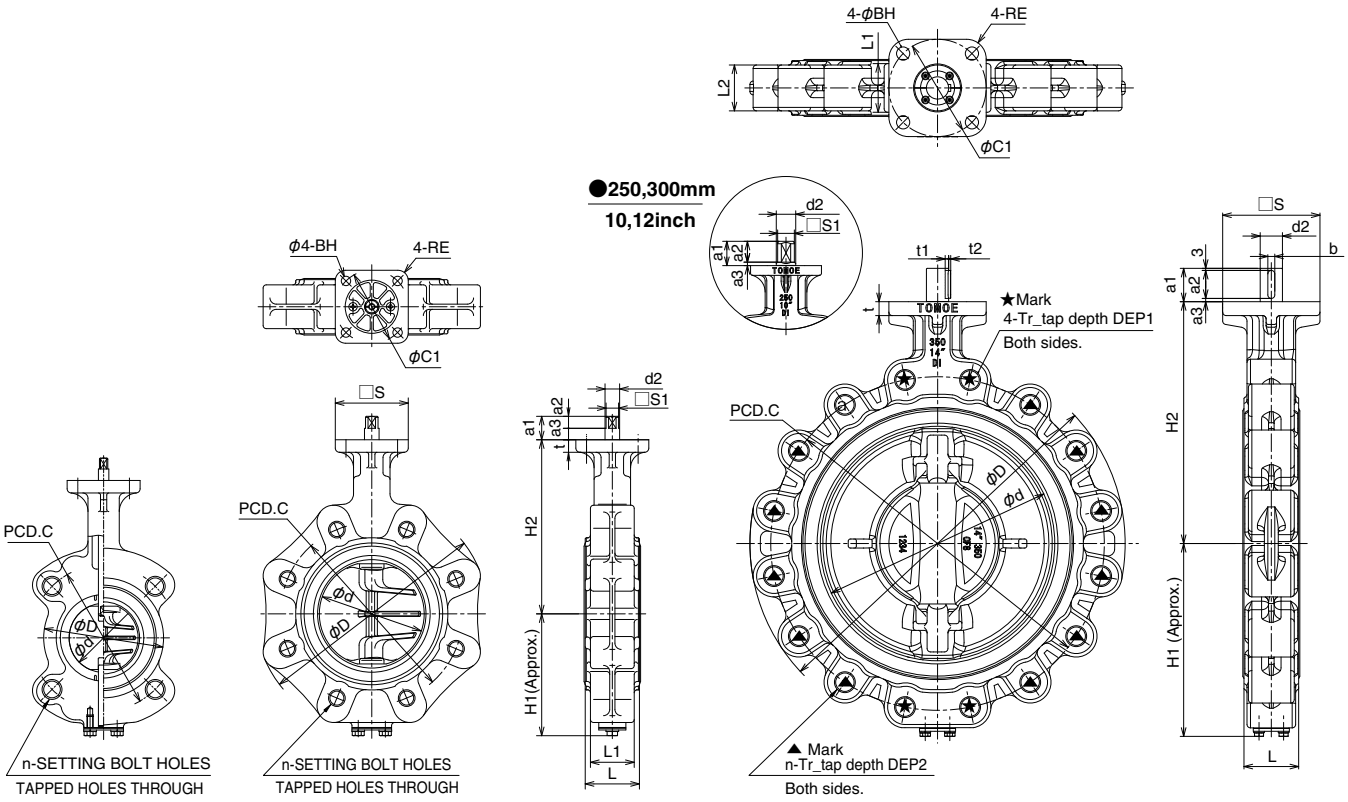

●50mm to 80mm
2inch to 3inch
(80mm:ASME-body)

●80mm to 200mm
3inch to 8inch
(80mm:JIS-body)

●350mm to 600mm
14inch to 24inch

Dimensions - Gear Operated Valve

Nominal size		H3	H4※	E	K	F	W	Gear Model	Approx Weight (kg)		
mm	inch								Standard	Installation Direction of B	Gear box
50	2	29.5	-	36	46	160	100	2U-0	4.8	-	2.3
65	2 1/2	29.5	-	36	46	160	100	2U-0	5.8	-	2.3
80	3	29.5	-	36	46	160	100	2U-1	6.3/7.1	-	2.3
100	4	29.5	-	36	46	160	100	2U-1	9	-	2.3
125	5	34.5	-	44	53	173.5	160	2U-2	13	-	4.2
150	6	34.5	-	44	53	173.5	160	2U-2	14.6	-	4.2
200	8	41.5	-	67	75	198	200	2U-3	22.5/24	-	8
250	10	41.5	-	67	75	198	200	2U-3	44	-	8
300	12	48	-	87.5	90	222.5	200	2U-4	63/64	-	13
350	14	48	-	87.5	90	222.5	280	2U-4	80/84	-	15
400	16	50	-	90	105	331	280	2U-5S	120	-	15
450	18	50	10	90	105	337	400	2U-5S	139/164	140/165	15
500	20	50	-	90	105	337	400	2U-5S	201	-	15
600	24	61	10	113	140	400	500	2U-6S	317/340	319/342	26

※ Must use spacer to 450mm and 600mm in the installation deirection of B.

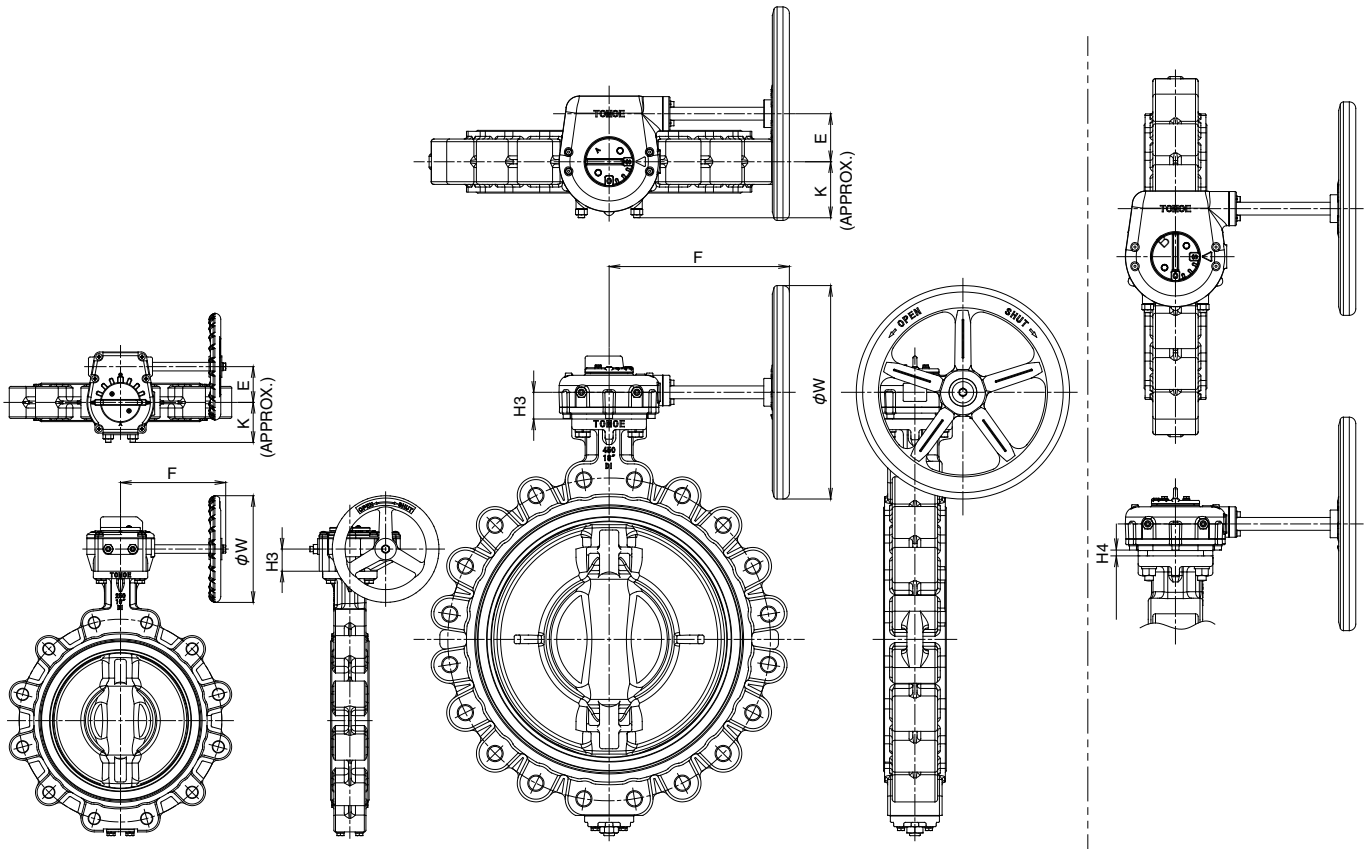

●50 to 350mm
2 to 14inch

●400 to 600mm
16 to 14inch

※
●450mm,600mm
18inch,24inch
lustallation direction of B

Applicable Flange Accommodation

Nominal size		BS4504 PN16							BS4504 PN10						
mm	inch	L2	D	C	n	Tr bolt	Dp DEP1	Dp DEP2	L2	D	C	n	Tr bolt	Dp DEP1	Dp DEP2
50	2	-	90	125	4	M16	◇		-	90	125	4	M16	◇	
65	2 1/2	-	115	145	4	M16	◇		-	115	145	4	M16	◇	
80	3	-	190	160	8	M16	◇		-	190	160	8	M16	◇	
100	4	-	223	180	8	M16	◇		-	223	180	8	M16	◇	
125	5	-	250	210	8	M16	◇		-	250	210	8	M16	◇	
150	6	-	276	240	8	M20	◇		-	276	240	8	M20	◇	
200	8	-	329	295	12	M20	◇		-	334	295	8	M20	◇	
250	10	60	430	355	8	M24	27	27	60	430	350	8	M20	27	27
300	12	64	485	410	8	M24	31	29	64	485	400	8	M20	31	29
350	14	66	540	470	12	M24	33	31	66	540	460	12	M20	33	31
400	16	80	605	525	12	M27	42	37	80	605	515	12	M24	42	37
450	18	85	675	585	16	M27	48	40	85	675	565	16	M24	48	40
500	20	90	730	650	16	M30	54	42	90	730	620	16	M24	54	42
600	24	115	840	770	16	M33	63	50	115	840	725	16	M27	63	50

Nominal size		DIN2633 PN16							DIN2632 PN10						
mm	inch	L2	D	C	n	Tr bolt	Dp DEP1	Dp DEP2	L2	D	C	n	Tr bolt	Dp DEP1	Dp DEP2
50	2	-	90	125	4	M16	◇		-	90	125	4	M16	◇	
65	2 1/2	-	115	145	4	M16	◇		-	115	145	4	M16	◇	
80	3	-	190	160	8	M16	◇		-	190	160	8	M16	◇	
100	4	-	223	180	8	M16	◇		-	223	180	8	M16	◇	
125	5	-	250	210	8	M16	◇		-	250	210	8	M16	◇	
150	6	-	276	240	8	M20	◇		-	276	240	8	M20	◇	
200	8	-	329	295	12	M20	◇		-	334	295	8	M20	◇	
250	10	60	430	355	8	M24	27	27	60	430	350	8	M20	27	27
300	12	64	485	410	8	M24	31	29	64	485	400	8	M20	31	29
350	14	66	540	470	12	M24	33	31	66	540	460	12	M20	33	31
400	16	80	605	525	12	M27	42	37	80	605	515	12	M24	42	37
450	18	85	675	585	16	M27	48	40	85	675	565	16	M24	48	40
500	20	90	730	650	16	M30	54	42	90	730	620	16	M24	54	42
600	24	115	840	770	16	M33	63	50	115	840	725	16	M27	63	50

Nominal size		ASME B 16.5 Class150							ASME B 16.1 Class125						
mm	inch	L2	D	C	n	Tr bolt	Dp DEP1	Dp DEP2	L2	D	C	n	Tr bolt	Dp DEP1	Dp DEP2
50	2	-	90	120.7	4	5/8-11UNC	◇		-	90	120.7	4	5/8-11UNC	◇	
65	2 1/2	-	115	139.7	4	5/8-11UNC	◇		-	115	139.7	4	5/8-11UNC	◇	
80	3	-	126	152.4	4	5/8-11UNC	◇		-	126	152.4	4	5/8-11UNC	◇	
100	4	-	223	190.5	8	5/8-11UNC	◇		-	223	190.5	8	5/8-11UNC	◇	
125	5	-	250	215.9	8	3/4-10UNC	◇		-	250	215.9	8	3/4-10UNC	◇	
150	6	-	276	241.3	8	3/4-10UNC	◇		-	276	241.3	8	3/4-10UNC	◇	
200	8	-	334	298.5	8	3/4-10UNC	◇		-	334	298.5	8	3/4-10UNC	◇	
250	10	60	430	362	8	7/8-9UNC	27	27	60	430	362	8	7/8-9UNC	27	27
300	12	64	485	431.8	8	7/8-9UNC	31	29	64	485	431.8	8	7/8-9UNC	31	29
350	14	66	533	476.3	8	1-8UNC	33	31	66	533	476.3	8	1-8UNC	33	31
400	16	80	605	539.8	12	1-8UNC	42	37	80	605	539.8	12	1-8UNC	42	37
450	18	85	635	577.9	12	1 1/8-UN	48	40	85	635	577.9	12	1 1/8-UN	48	40
500	20	90	730	635.0	16	1 1/8-UN	54	42	90	730	635.0	16	1 1/8-UN	54	42
600	24	115	840	749.3	16	1 1/4-8UN	63	50	115	840	749.3	16	1 1/4-8UN	63	50

◇: Through

Applicable Flange Accommodation

Nominal size		GB/T9113.1 PN1.6							GB/T9113.1 PN1.0						
mm	inch	L2	D	C	n	Tr bolt	Dp		L2	D	C	n	Tr bolt	Dp	
							DEP1	DEP2						DEP1	DEP2
50	2	-	90	125	4	M16	◇		-	90	125	4	M16	◇	
65	2 1/2	-	115	145	4	M16	◇		-	115	145	4	M16	◇	
80	3	-	190	160	8	M16	◇		-	190	160	8	M16	◇	
100	4	-	223	180	8	M16	◇		-	223	180	8	M16	◇	
125	5	-	250	210	8	M16	◇		-	250	210	8	M16	◇	
150	6	-	276	240	8	M20	◇		-	276	240	8	M20	◇	
200	8	-	329	295	12	M20	◇		-	334	295	8	M20	◇	
250	10	60	430	355	8	M24	27	27	60	430	350	8	M20	27	27
300	12	64	485	410	8	M24	31	29	64	485	400	8	M20	31	29
350	14	66	540	470	12	M24	33	31	66	540	460	12	M20	33	31
400	16	80	605	525	12	M27	42	37	80	605	515	12	M24	42	37
450	18	85	675	585	16	M27	48	40	85	675	565	16	M24	48	40
500	20	90	730	650	16	M30	54	42	90	730	620	16	M24	54	42
600	24	115	840	770	16	M33	63	50	115	840	725	16	M27	63	50

Nominal size		JIS 16K							JIS 10K						
mm	inch	L2	D	C	n	Tr bolt	Dp		L2	D	C	n	Tr bolt	Dp	
							DEP1	DEP2						DEP1	DEP2
50	2	×	×	×	×	×	×		-	90	120	4	M16	◇	
65	2 1/2	×	×	×	×	×	×		-	115	140	4	M16	◇	
80	3	×	×	×	×	×	×		-	190	150	8	M16	◇	
100	4	×	×	×	×	×	×		-	223	175	8	M16	◇	
125	5	×	×	×	×	×	×		-	250	210	8	M20	◇	
150	6	×	×	×	×	×	×		-	276	240	8	M20	◇	
200	8	×	×	×	×	×	×		-	329	290	12	M20	◇	
250	10	60	430	380	8	M24	27	27	60	430	355	8	M22	27	27
300	12	64	480	430	12	M24	31	29	64	480	400	12	M22	31	29
350	14	66	540	480	12	M30×3	33	31	66	540	445	12	M22	33	31
400	16	80	605	540	12	M30×3	42	37	80	605	510	12	M24	42	37
450	18	85	675	605	16	M30×3	48	40	85	675	565	16	M24	48	40
500	20	90	730	660	16	M30×3	54	42	90	730	620	16	M24	54	42
600	24	130	845	770	20	M36×3	45	45	130	845	730	20	M30	45	45

×: Not Applicable
◇: Through

Large Diameter Rubber Seat Butterfly Valves for General Use

700E Wafer with support lugs

700K Wafer with support lugs

700S Wafer with support lugs





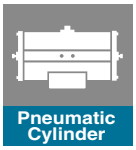



Features and Benefits

Simple structure and low cost. Many years of proven reliable performance in various industries.

Concentric design raised centre seat

Figure 1 shows the TOMOE sealing design between the disc and seat. The raised section of the seat reduces and minimises the operating torque while ensuring a tight seal between disc and seat.

Rounded dove-tail design

Figure 2 shows the self-gripping seat ring design firmly in place inside the body. This design ensures the seat cannot be displaced during the bolting up of the adjoining flange. The seat also acts as the gasket between the valve and the pipe flange.

Triple-sealing system

Figure 3 shows the triple stem seal. The primary seal is created from the initial compression between the flat surface of the seat and the flat hub of the disc. When the valve is subject to normal operating conditions this seals the shaft and body from any contact with the flowing medium. The secondary seal is accomplished by an O-ring fitted into a stainless steel cartridge which is moulded into the seat ring. There is a secondary seal at each end of the stem where it penetrates the seat. The third seal is to prevent dirt and other foreign materials within the environment from getting into any of the working valve parts.

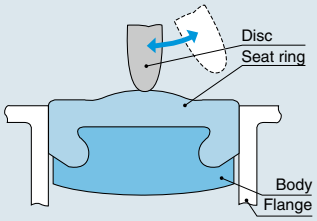

Figure 1

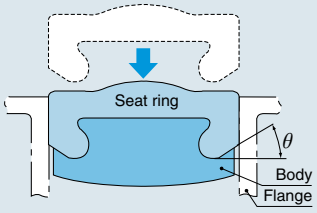

Figure 2

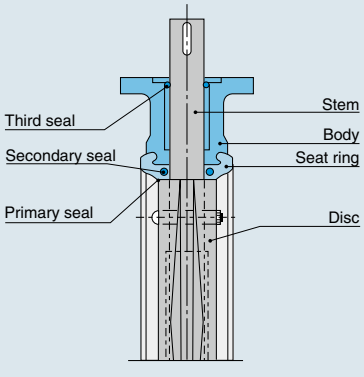

Figure 3

Discs and seats come in various materials to meet a wide range of needs. These are the ultimate general purpose valves and they provide excellent cost performance.

General Description

TOMOE butterfly valves are used worldwide for various applications in water treatment, shipbuilding, air conditioning, petrochemical, power generation and other industries. Among the various types of TOMOE rubber seated butterfly valves, there are three types – 700E, 700K and 700S – that are particularly suitable for large diameter applications.

Standard Specifications

Type		700E	700K	700S
Size		650mm – 1350mm		
Max. Working Pressure MPa (kgf/com^2)		0.98 MPa		
Flange standard ※1		JIS 5K/10K	ASME B16.1 Class 125 ISO PN 10 ASME B 16.47 Series A Class 150lb	ASME B16.47 Series B Class 150lb API 605 Class 150
Working temperature range		NBR : -10 to 80 degrees C, *EPDM : -20 to 120 degrees C		
Working temperature in continuous use ※3		NBR : 0 to 60 degrees C, *EPDM : 0 to 70 degrees C		
Standard materials	Body	Cast iron	Cast iron, Ductile iron, Carbon steel	Cast iron, Ductile iron, Carbon steel
	Disc	Stainless steel Ductile iron with hard Cr plated stainless steel casting Aluminium bronze		
	Stem	Stainless steel, K-MONEL		
	Seat ring ※2	NBR, *EPDM		
Coating		Lacquer Primer (Munsell N7)		
Test Standard		API 598, AWWA C504		
Material Certification		EN 10204 3.1B for body disc and stem		
Marking		MSS SP-25		

※1 Other flange standards may be available on request. Consult us.
※2 The seat ring of 1000mm and over for 700E/S/K and 720F are vulcanized to the body.
※3 'Working temperature in continuous use' stands for the temperature continuously kept exceeding one hour.
※ Clean face disc (2 shaft design) is available for 700E/S/K and 720F.
※ Please refer to 700G, 704G, 705G in case of 600mm or below.
* Never use an EPDM rubber seat ring if the valve is being used for oil or for a fluid containing even a slight amount of oil.

700E / 700K / 700S Expanded View of Component

1000mm to 1350mm

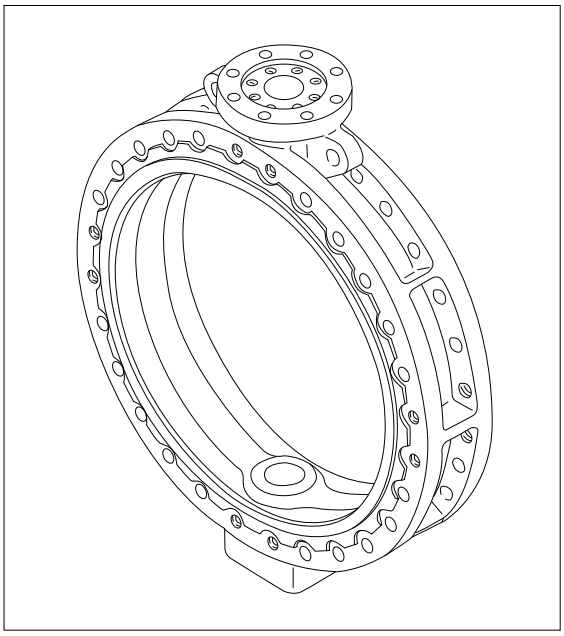

650mm to 1350mm

■700E / 700K / 700S Parts List（650mm to 1350mm）

No.	Description	Q'ty	Remarks
1	Body	1	
2	Disc	1	
3	Stem	1	
4	Bushing	1	
5	Bushing	1	
6	Bottom cover	1	
7	Retainer plate	1	
★ 8-1	Taper bolt	2	650mm to 900mm
		4	1000mm to 1350mm
★ 8-2	O-ring	4	650mm to 900mm
		8	1000mm to 1350mm
★ 9-1	Hexagon nut	2	650mm to 900mm
		4	1000mm to 1350mm
★ 9-2	Spring washer	2	650mm to 900mm
		4	1000mm to 1350mm
10-1	Hexagon bolt	4	650mm to 850mm
		8	900mm to 1350mm
10-2	Spring washer	4	650mm to 850mm
		8	900mm to 1350mm
11	Hexagon bolt	4	650mm to 850mm
		8	900mm to 1350mm
★ 12	Seat ring	1	1000mm to 1350mm:Vulcanized to the body
★ 13	O-ring	1	See Remark 2.
14	Gasket	1	
★ 15	O-ring	2	See Remark 2.
16	Ball	1	
17	Hollow bolt	1	
18	Lock nut	1	
g41	Key	1	

Remark 1: The ★ indicates recommended spare parts. They are supplied as "Seat ring set" with a small hexagonal spanner to remove hollow bolt (P.17).
Consult us when repairing the seatring on 1000 to 1350mm types as it is vulcanized to the body.
Remark 2: The O-ring material (item numbers 13 and 15) should be the same as the seatring (item number 12).

700E / 700K / 700S Actuator Selection Chart

■700E / 700K / 700S

Model	Category	Size (mm / inch)									
		650	700	750	800	850	900	1000	1100	1200	1350
		26	28	30	32	34	36	40	44	48	54
2S	Standard	MGH-4	MGH-4 1/2			MGH-5		MGH-6			MGH-7
	Heavy duty										
3A	Standard	TGA-180	TGA-200		TGA-220		TGA-250				
	Heavy duty	TGA-220		TGA-250							
4L	Standard	LTKD-05 0.75kW /MGH-4	LTKD-05 0.75kW /MGH-5	LTKD-05 1.5kW /MGH-5	LTKD-01 1.5kW /MGH-5			LTKD-01 1.5kW /MGH-6			LTKD-1 2.2kW /MGH-7
	Heavy duty										

Selection criteria		
	Standard	Select when none of the following heavy duty items apply.
	Heavy duty	Select when any of the following items apply. ①Powder or high viscosity fluid (crude oil, etc.) ②Control specification (with positioner) ③Emergency open valve or pipe dead end valve ④Air or Gas

700E / 700K / 700S Pressure-Temperature Rating

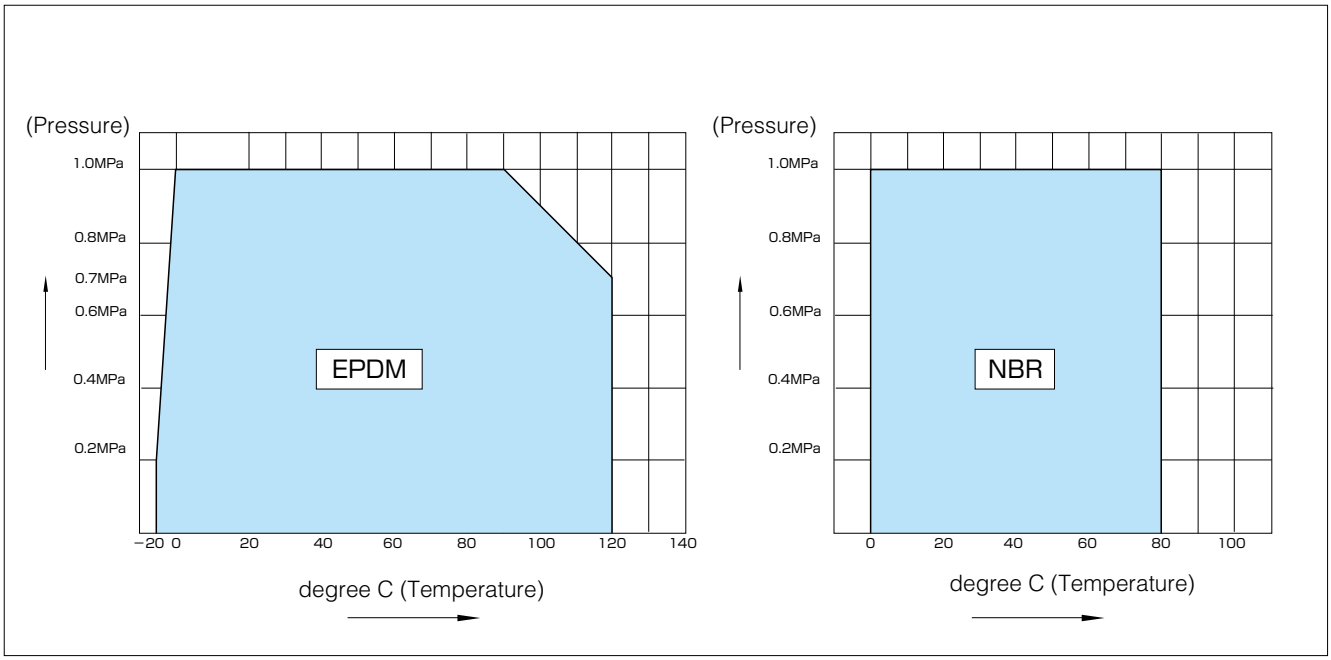

Wafer with Support Lugs

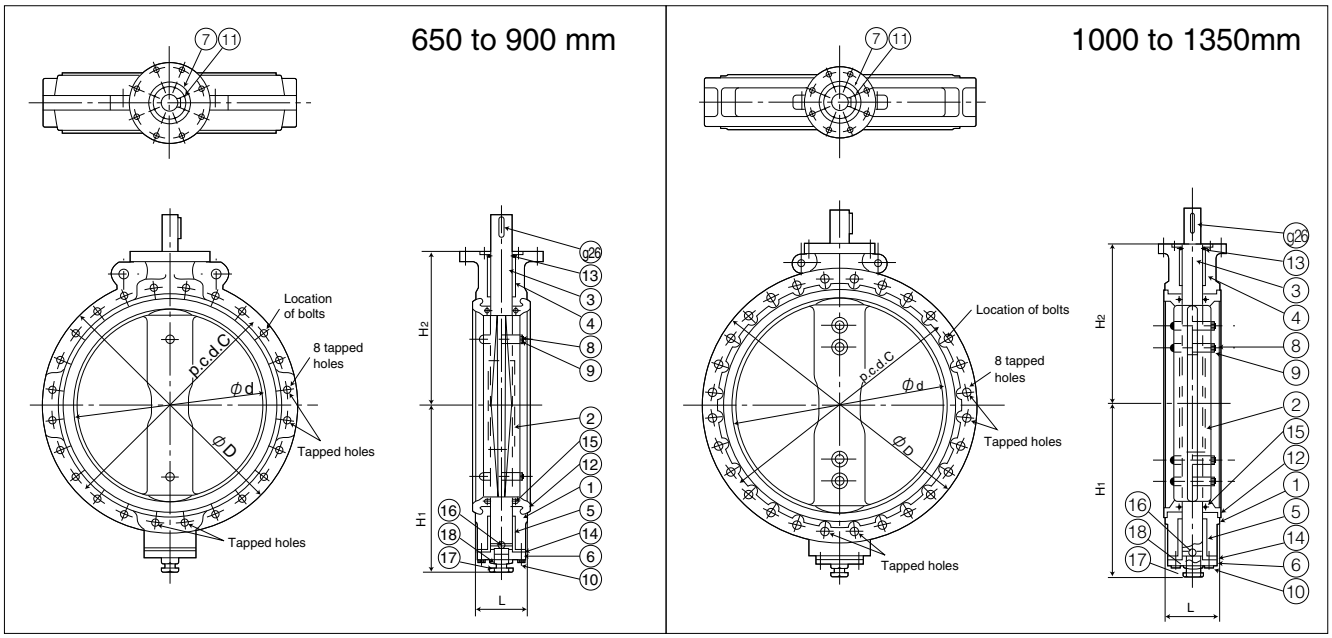

■Dimensions (700E / 700K / 700S)

Nominal size		Dimension (mm)					Weight	Flange Rating※1							
								JIS 5K※2		JIS 10K※2		ASME B 16.47 Series A		BS 4504 NP10, DIN PN10	
mm	inch	Φd	ΦD※1	L	H_1	H_2	(kg)	Long bolts & Nuts	Hex. bolts	Long bolts & Nuts	Hex. bolts	Long bolts & Nuts	Hex. bolts	Long bolts & Nuts	Hex. bolts
650	26	627	845	170	558	510	360	16–M24×285×50	16–M24×65×54	16–M30×310×60	16–M30× 80×66	16–U1 1/4×390×70	16–U1 1/4×110×70	16–M20×200×45	———
700	28	670	905	180	629	560	490	16–M24×295×50	16–M24×65×54	16–M30×320×60	16–M30× 80×66	20–U1 1/4×410×70	16–U1 1/4×110×70	16–M24×210×50	———
750	30	723	970	190	659	590	540	16–M30×320×60	16–M30×75×66	16–M30×335×60	16–M30× 80×66	20–U1 1/4×425×70	16–U1 1/4×125×70	20–M24×250×50	———
800	32	772	1020	200	679	620	710	16–M30×335×60	16–M30×75×66	20–M30×345×60	16–M30× 80×66	20–U1 1/2×460×80	16–U1 1/4×125×80	16–M27×280×60	8–M27× 60×50
850	34	822	1070	210	709	650	800	16–M30×345×60	16–M30×75×66	20–M30×360×60	16–M30× 80×66	24–U1 1/2×475×80	16–U1 1/4×135×80	16–M27×305×60	16–M27× 65×54
900	36	858	1120	230	759	685	870	16–M30×360×60	16–M30×75×66	20–M30×385×65	16–M30× 85×66	24–U1 1/2×510×80	16–U1 1/4×145×80	16–M30×335×60	16–M30× 65×54
1000	40	975	1235	250	819	745	1200	20–M30×385×65	16–M30×85×66	20–M36×420×75	16–M36×100×78	28–U1 1/2×530×80	16–U1 1/4×145×80	20–M30×370×65	16–M30× 75×66
1100	44	1070	1345	280	874	820	1350	20–M30×420×65	16–M30×85×66	20–M36×450×80	16–M36×100×78	32–U1 1/2×580×80	16–U1 1/4×155×80	20–M33×400×65	16–M33× 90×72
1200	48	1168	1465	300	949	880	1700	24–M30×445×65	16–M30×85×66	24–M36×475×80	16–M36×100×78	36–U1 1/2×615×80	16–U1 1/4×160×80	24–M36×475×80	16–M36×100×78
1350	54	1314	1630	330	1030	960	2300	24–M30×475×65	16–M30×85×66	28–M42×525×80	16–M42×100×90	———	———	———	———

※700S dimensions for ASME B16-47, series B class finish are available upon request.
※1 "D" dimension shows for 700E, JIS 10 K.
※2 Nut is 80% of bolt diameter.

Worm Gear Type 700E / 700K / 700S-2S（650mm to 1350mm）

■700E / 700K / 700S-2S

Nominal size		Dimension (mm)										Gear type	Approx. Weight (kg)
mm	inch	φd	φD	L	H_1	H_2	H_3	E	K	F	W		
650	26	627	845	170	558	510	65	140	198	400	450	MGH-4	363
700	28	670	905	180	629	560	75	185	267	457	500	MGH-41/2	487
750	30	723	970	190	659	590	75	185	267	457	500	MGH-41/2	547
800	32	772	1020	200	679	620	75	185	267	457	500	MGH-41/2	617
850	34	822	1070	210	709	650	100	210	293	490	500	MGH-5	780
900	36	858	1120	230	759	685	100	210	293	490	500	MGH-5	855
1000	40	975	1235	250	819	745	100	210	293	490	500	MGH-6	1384
1100	44	1070	1345	280	874	820	100	210	293	490	500	MGH-6	1584
1200	48	1170	1465	300	948	880	100	210	293	490	500	MGH-6	1984
1350	54	1314	1630	330	1030	960	151	280	293	675	600	MGH-7	2330

■700E / 700K / 700S-2S

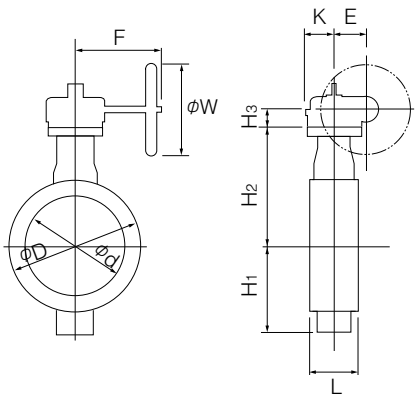

■2S Installation Direction

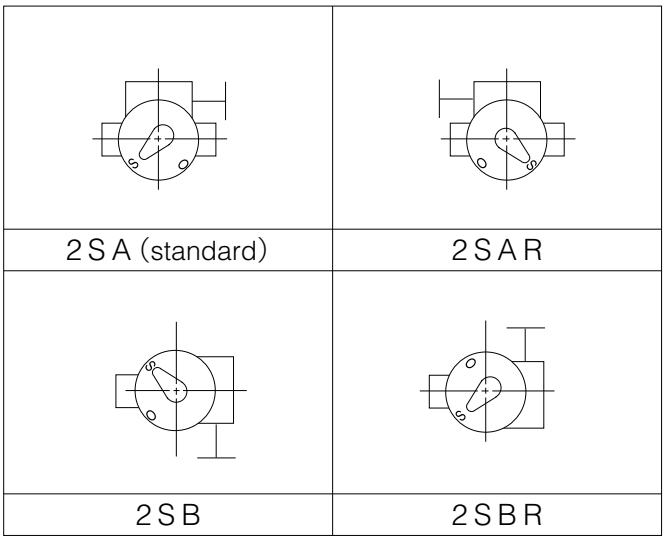

Double-acting Pneumatic Cylinder Type 700E / 700K / 700S-3A(650mm to 900mm)

■Standard

Nominal size		Dimension (mm)										Cylinder type	Approx. Weight (kg)
mm	inch	φd	φD	L	H_1	H_2	H_3	A	P	f_1	f_2		
650	26	627	845	170	558	510	478	1053	543	130	218	TGA-180	456
700	28	670	905	180	629	560	570	1163	599	160	253	TGA-200	607
750	30	723	970	190	659	590	570	1163	599	160	253	TGA-200	667
800	32	772	1020	200	679	620	600	1248	642	160	270	TGA-220	761
850	34	822	1070	210	709	650	600	1248	642	160	270	TGA-220	881
900	36	858	1120	230	759	685	633	1381	707	160	299	TGA-250	1022

■Heavy Duty

Nominal size		Dimension (mm)										Cylinder type	Approx. Weight (kg)
mm	inch	φd	φD	L	H_1	H_2	H_3	A	P	f_1	f_2		
650	26	627	845	170	558	510	600	1248	642	160	270	TGA-220	562
700	28	670	905	180	629	560	600	1248	642	160	270	TGA-220	637
750	30	723	970	190	659	590	633	1381	707	160	299	TGA-250	756
800	32	772	1020	200	679	620	633	1381	707	160	299	TGA-250	826

Selection criteria		
	Standard	Select when none of the following heavy duty items apply.
	Heavy duty	Select when any of the following items apply. ①Powder or high viscosity fluid (crude oil, etc.) ②Control specification (with positioner) ③Emergency open valve or pipe dead end valve ④Air or Gas

■700E / 700K / 700S-3A

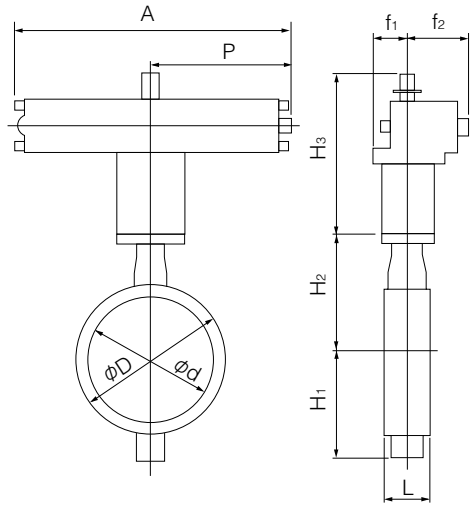

■3A Installation Direction

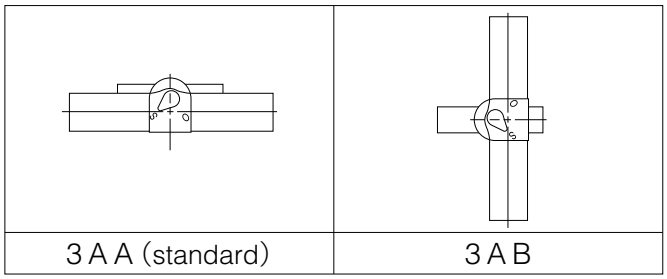

Three Phase Motor Actuator Type 700E / 700K / 700S-4L(650mm to 1350mm)

Nominal size		Dimension (mm)										Motor type	Approx. Weight (kg)
mm	inch	φd	φD	L	H_1	H_2	H_3	E	K	F	M	P	
650	26	627	845	170	558	510	570	140	198	637	440	375	LTKD-05 0.75kW /MGH-4	515
700	28	670	905	180	629	560	640	210	293	747	440	375	LTKD-05 0.75kW /MGH-5	710
750	30	723	970	190	659	590	640	210	293	747	477	375	LTKD-05 1.5kW /MGH-5	770
800	32	772	1020	200	679	620	680	210	293	797	537	425	LTKD-1 1.5kW /MGH-5	905
850	34	822	1070	210	709	650	680	210	293	797	537	425	LTKD-1 1.5kW /MGH-5	1025
900	36	858	1120	230	759	685	680	210	293	797	537	425	LTKD-1 1.5kW /MGH-5	1100
1000	40	975	1235	250	819	745	700	210	293	762	537	425	LTKD-1 1.5kW /MGH-6	1670
1100	44	1070	1345	280	874	820	700	210	293	762	537	425	LTKD-1 1.5kW /MGH-6	1870
1200	48	1170	1465	300	948	880	700	210	293	762	537	425	LTKD-1 1.5kW /MGH-6	2270
1350	54	1314	1630	330	1030	960	700	280	293	810	540	410	LTKD-1 2.2kW /MGH-7	2650

■700E / 700K / 700S-4L

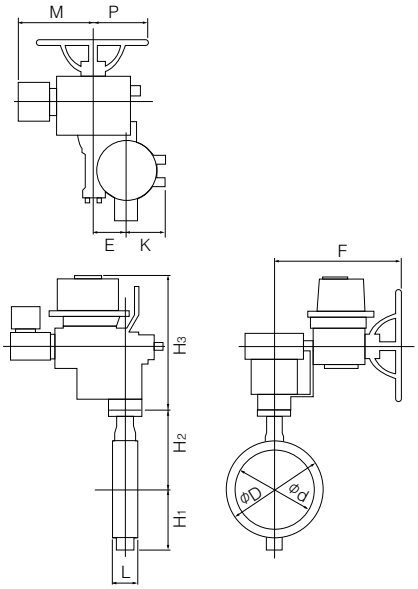

■4L Installation Direction

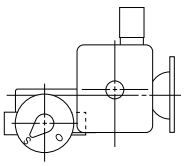

4 L A (standard)

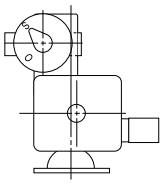

4 L B

700E / 700K / 700S Cv Value/Pressure Loss Coefficient

●Cv value

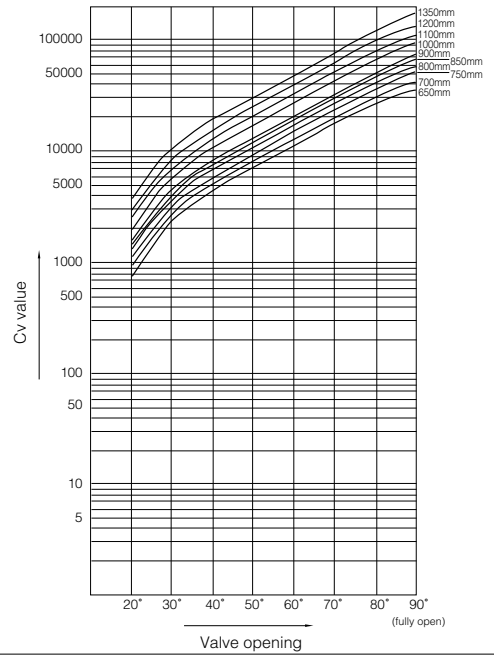

●Pressure loss coefficient

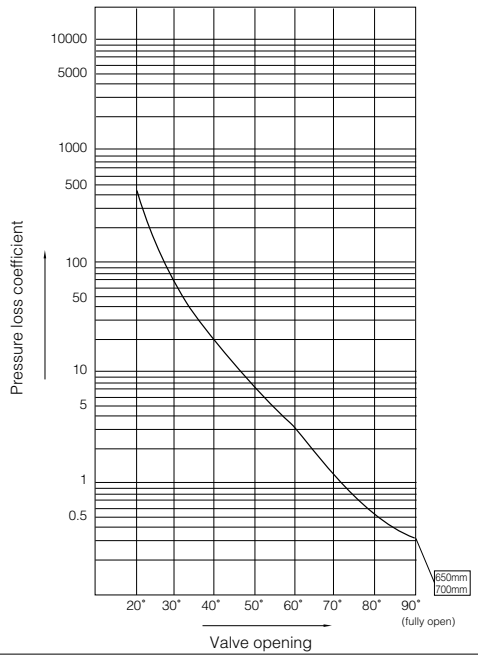

700E / 700K / 700S Cv Value

Nominal size		Valve opening							
mm	inch	20˚	30˚	40˚	50˚	60˚	70˚	80˚	90˚
650	26	817	2441	4473	7159	11013	17254	26972	32500
700	28	934	2807	5122	8152	12511	19728	30929	39000
750	30	935	3220	5965	9450	14328	22687	38260	52000
800	32	1200	3721	6791	10771	16553	26976	43316	59000
850	34	1164	4018	7516	12063	18567	29284	46350	66000
900	36	1358	4497	8298	13177	20139	32362	53126	73000
1000	40	1784	5835	10740	17060	26110	42070	68860	95000
1100	44	2075	7030	13020	20680	31530	50420	83340	114000
1200	48	2570	8520	15710	24900	37930	60280	98640	138000
1350	54	3385	10180	18810	30490	47840	75750	119000	173000

700E / 700K / 700S Pressure Loss Coefficient

Nominal size		Valve opening							
mm	inch	20˚	30˚	40˚	50˚	60˚	70˚	80˚	90˚
650	26	553	62	18	7	3	1	1	0.4
700	28	573	63	19	8	3	1	1	0.3
750	30	758	64	19	7	3	1	0.5	0.3
800	32	599	62	19	7	3	1	0.5	0.3
850	34	815	68	20	8	3	1	0.5	0.3
900	36	756	69	20	8	3	1	0.5	0.3
1000	40	645	60	18	7	3	1	0.4	0.2
1100	44	701	61	18	7	3	1	0.4	0.2
1200	48	658	60	18	7	3	1	0.4	0.2
1350	54	611	68	20	8	3	1	0.5	0.2

700E / 700K / 700S Applicable Flange Standard

Nominal size		JIS			ANSI		BS4504	DIN	BS10
mm	inch	5K	10K	G5527	125Lb	150Lb	PN10	NP10	Table E
650	26	T	T	Consult us if flange standard is not JIS 5K/10K.					
700	28	T	T						
750	30	T	T						
800	32	T	T						
850	34	T	T						
900	36	T	T						
1000	40	T	T						
1100	44	T	T						
1200	48	T	T						
1350	54	T	T						

○ : Can be used without flange drilling.
D/T: With drill hole or tapping.
T : With flange tapping.
— : No nominal diameter.

700E / 700K / 700S Applicable Pipe List in Case of A

Nominal size		STPY	Sch20	Sch40	Minimum internal diameter of piping (mm)
mm	inch				
650	26	○	○	○	612
700	28	○	—	—	653
750	30	○	—	—	705
800	32	○	—	—	754
850	34	○	—	—	803
900	36	○	—	—	834
1000	40	○	—	—	950
1100	44	○	—	—	1040
1200	48	○	—	—	1138
1350	54	○	—	—	1277

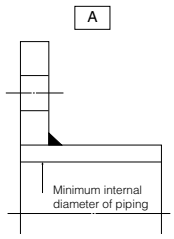

Remark 1: ○=Applicable
Remark 2: Butterfly valves are inserted into a pipe that was fitted with the disc when fully open.
In cases where you are using a pipe or flange that is less than the minimum inner pipe diameter,
use is still possible if means are taken such as inserting a spacer between the valve and flange.
For details, please consult us.

700E / 700K / 700S Applicable Pipe List in Case of B

Nominal size		STPY	Sch20	Sch40
mm	inch			
650	26	○	○	○
700	28	○	—	—
750	30	○	—	—
800	32	○	—	—
850	34	○	—	—
900	36	○	—	—
1000	40	○	—	—
1100	44	○	—	—
1200	48	○	—	—
1350	54	○	—	—

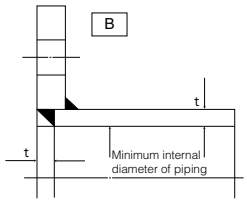

Remark 1: ○=Applicable
Remark 2: Butterfly valves are inserted into a pipe that was fitted with the disc when fully open.
In cases where you are using a pipe or flange that is less than the minimum inner pipe diameter,
use is still possible if means are taken such as inserting a spacer between the valve and flange.
For details, please consult us.

MEMO

10 BAR Rated Butterfly Valve for General & Marine Use

704G Lugged

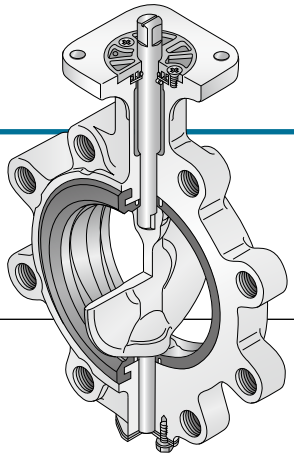

722F Double flanged

720F Double flanged

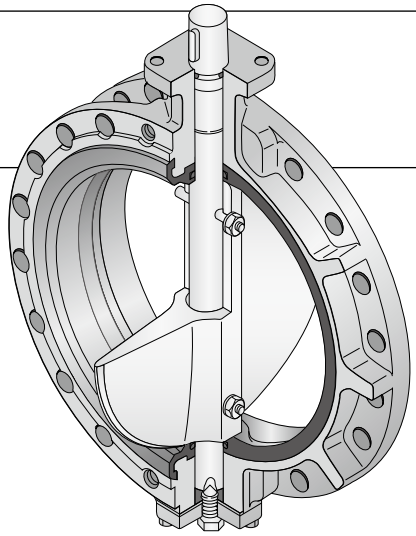

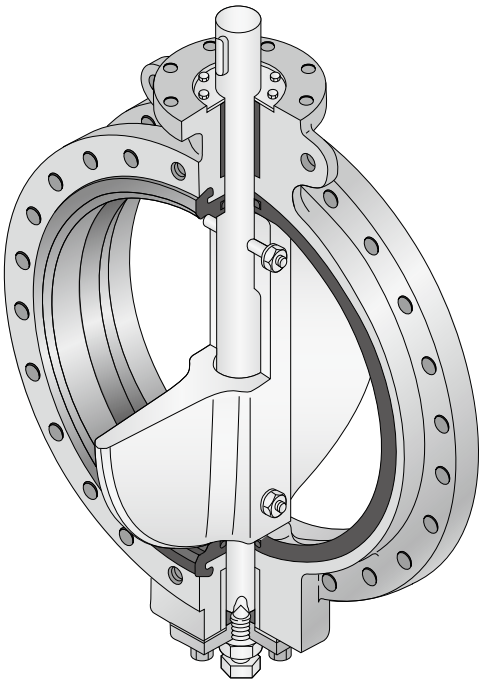


Lock Lever


Worm Gear


Center Handle


Pneumatic Cylinder


Motorized

Today's ships have to work hard. With the extensive use of automated systems, minimum manning levels, extended journeys and quick turn round times, maintenance time is at a premium. Equipment must be ultra reliable and also meet the latest standards.

Features and Benefits

Long life and leak tight

The 704G/722F/720F are designed to meet all of these requirements. They are tough valves made to international standards with worldwide marine approvals.
Long term leak tightness was achieved through attention to detail in the spindle sealing and seat design.

Low cost maintenance

The seat and disc can easily be replaced under a planned maintenance schedule. This ease of replacement does not affect the valve's function as the seat is positively located in machined grooves in the valve body.

Certification/Approval

Satisfies requirements of the major certification/approval bodies such as:
Lloyd's Register of Shipping (LR)
American Bureau of Shipping (ABS)
Nippon Kaiji Kyokai (NK)
Bureau Veritas (BV)
Korean Register of Shipping (KR)

Standard Specifications

Type		704G	722F	720F
		Lugged type	Flanged type	
Valve nominal size		50mm to 100mm ※1	125mm to 800mm	850mm to 1350mm
Applicable flange standard ※2		JIS 10K, (JIS 5K, ANSI 125/150, BS 4504 PN10)		
Max. working pressure		1.0MPa		
Body shell test		1.5MPa		
Seat leak test		1.1MPa		
Working temperature range		NBR : -10 to 80 degrees C, *EPDM : -20 to 120 degrees C		
Working temperature in continuous use ※3		NBR : 0 to 60 degrees C, *EPDM : 0 to 70 degrees C		
Standard materials ※4	Body	Cast steel, SCPH2		
	Disc	SCS 14 (316SS)	SCS 13 (304SS)	
	Stem	SUS 420J2	SUS 403	
	Seat ring ※5	NBR, *EPDM		
Coating		Lacquer primer (Munsell N7)		

※1 Available up to 600mm.
※2 Semi-standard. Consult us.
※3 'Working temperature in continuous use' stands for the temperature continuously kept exceeding one hour.
※4 Other materials, such as ductile iron body, aluminium bronze disc,etc, are also available. Consult us.
※5 Seatring on 1000mm types and above are vulcanized to the body.
* Never use an EPDM rubber seat ring if the valve is being used for oil or for a fluid containing even a slight amount of oil.

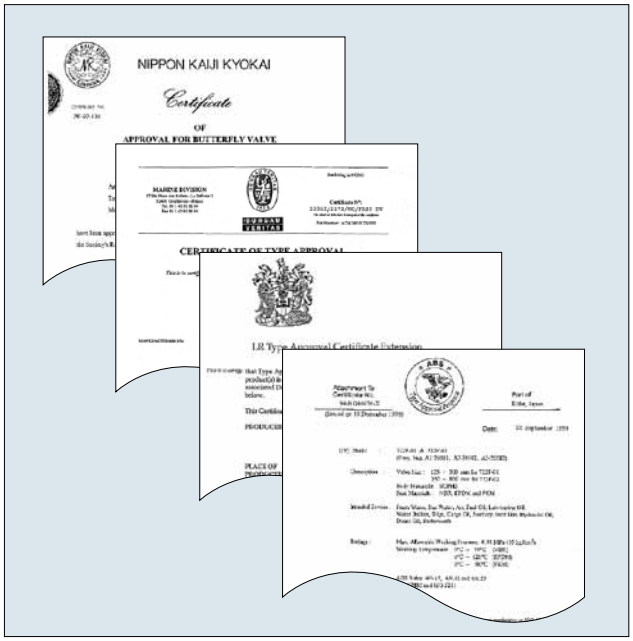

704G Expanded View of Components

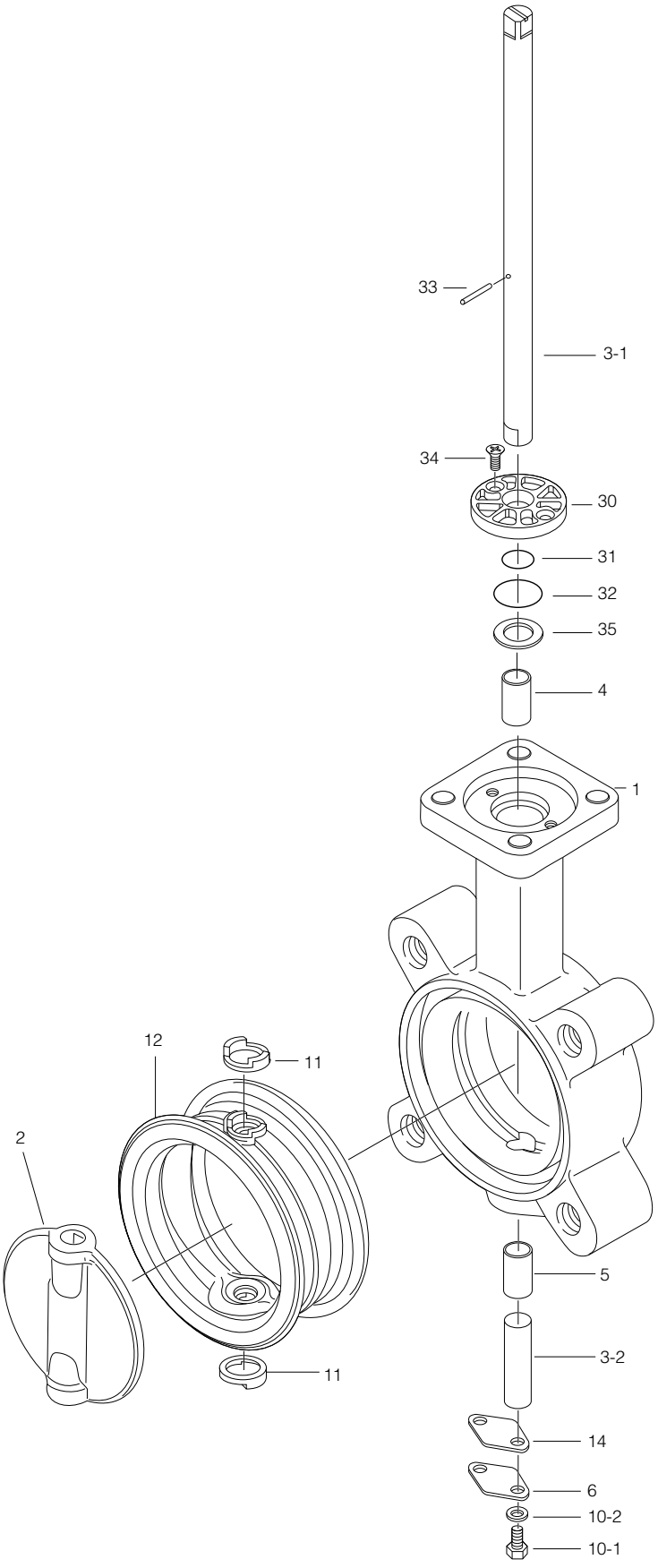

■704G Parts list（50mm to 100mm）

No.	Description	Q'ty	Remarks
1	Body	1	
2	Disc	1	
3-1	Upper stem	1	
3-2	Lower stem	1	
4	Bearing	1	
5	Bearing	1	
6	Bottom cover	1	
10-1	Hexagon bolt	2	
10-2	Spring washer	2	
★ 11	Secondary ring	2	
★ 12	Seat ring	1	
★ 14	Gasket	1	
★ 30	Bushing	1	
★ 31	O-ring	1	
★ 32	O-ring	1	
33	Spring pin	1	
34	Machine screw	2	
35	Plate	1	

Remark: The ★ indicates recommended spare parts. They are supplied as "Seat ring set" with a small hexagonal speanner to remove set screws.

722F Expanded View of Components

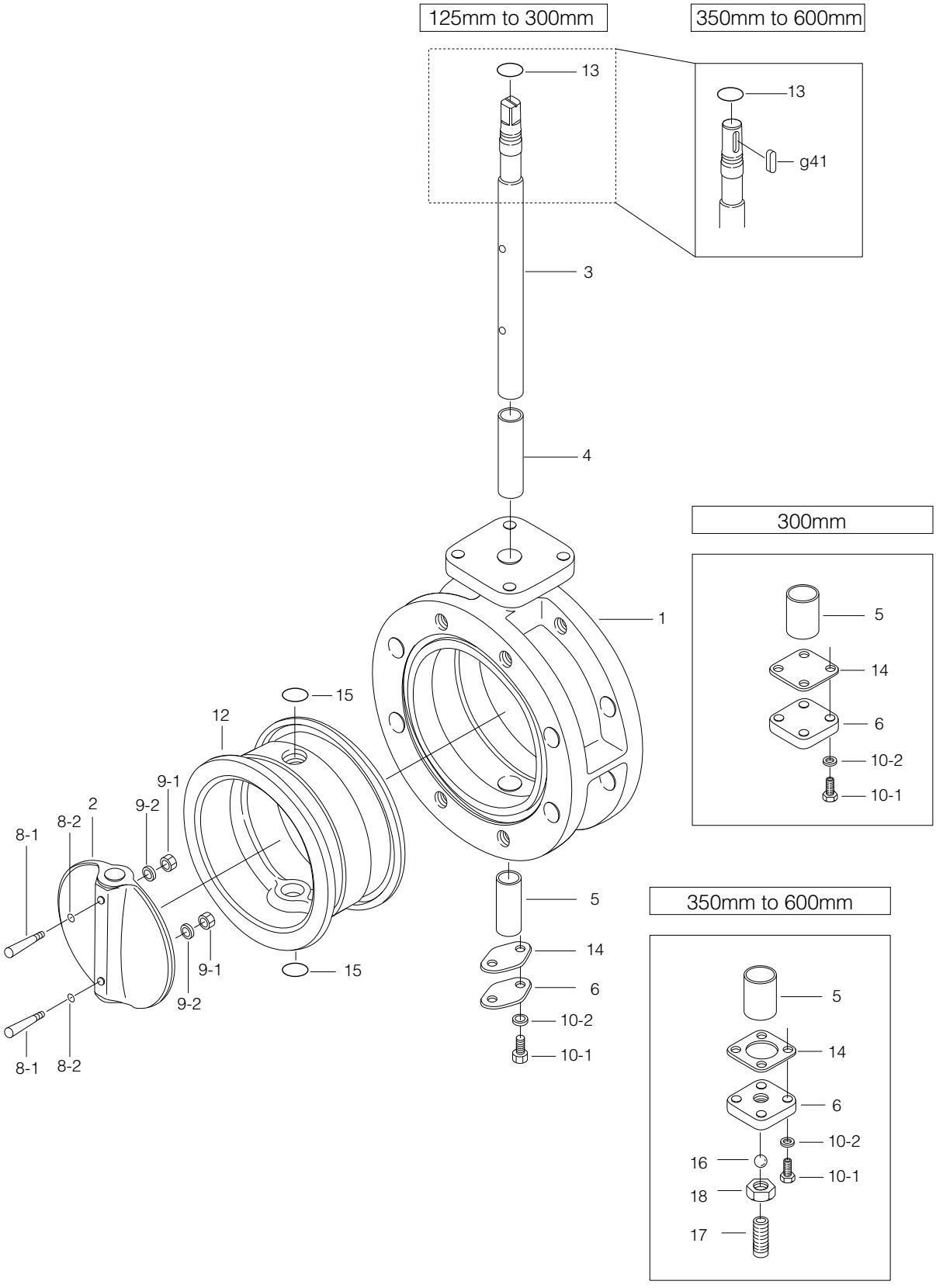

■722F Parts list（125mm to 300mm）

No.	Description	Q'ty	Remarks
1	Body	1	
2	Disc	1	
3	Stem	1	
4	Bushing	1	
5	Bushing	1	
6	Bottom cover	1	
★ 8-1	Taper bolt	1	125mm
		2	150mm to 300mm
★ 8-2	O-ring	4	Only 300mm
★ 9-1	Hexagon nut	1	125mm
		2	150mm to 300mm
★ 9-2	Spring washer	1	125mm
		2	150mm to 300mm
10-1	Hexagon bolt	2	125mm to 250mm
		4	300mm
10-2	Spring washer	2	125mm to 250mm
		4	300mm
★ 12	Seat ring	1	
★ 13	O-ring	1	
14	Gasket	1	
★ 15	O-ring	2	See Remark 2.

■722F Parts list（350mm to 600mm）

No.	Description	Q'ty	Remarks
1	Body	1	
2	Disc	1	
3	Stem	1	
4	Bushing	1	
5	Bushing	1	
6	Bottom cover	1	
★ 8-1	Taper bolt	2	
★ 8-2	O-ring	4	
★ 9-1	Hexagon nut	2	
★ 9-2	Spring washer	2	
10-1	Hexagon bolt	4	
10-2	Spring washer	4	
★ 12	Seat ring	1	
★ 13	O-ring	1	
14	Gasket	1	
★ 15	O-ring	2	See Remark 2.
16	Ball	1	
17	Hollow bolt	1	
18	Lock nut	1	
g41	Key	1	

Remark 1: The ★ indicates recommended spare parts. They are supplied as "Seat ring set" with a small hexagonal speanner to remove hollow bolt (P.17).
Remark 2: The O-ring material (item number 15) should be the same as the sea tring (item number 12).

722F・720F Expanded View of Components

1000mm to 1350mm

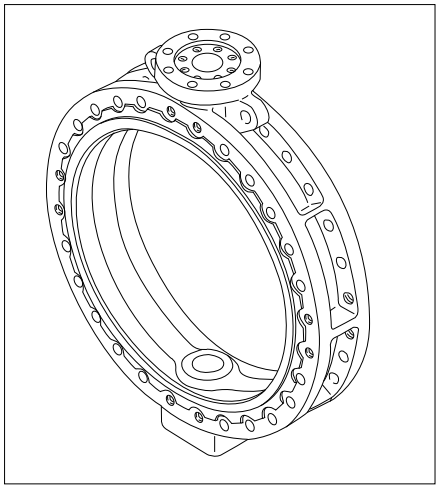

722F and 720F, 650mm to 1350mm

■722F and 720F Parts list（722F: 650mm to 800mm / 720F: 850mm to 1350mm）

No.	Description	Q'ty	Remarks
1	Body	1	
2	Disc	1	
3	Stem	1	
4	Bushing	1	
5	Bushing	1	
6	Bottom cover	1	
7	Retainer plate	1	
★ 8-1	Taper bolt	2	650mm to 900mm
		4	1000mm to 1350mm
★ 8-2	O-ring	4	650mm to 900mm
		8	1000mm to 1350mm
★ 9-1	Hexagon nut	2	650mm to 900mm
		4	1000mm to 1350mm
★ 9-2	Spring washer	2	650mm to 900mm
		4	1000mm to 1350mm
10-1	Hexagon bolt	4	650mm to 850
		8	900mm to 1350mm
10-2	Spring washer	4	650mm to 850mm
		8	900mm to 1350mm
11	Hexagon bolt	4	650mm to 850mm
		8	900mm to 1350mm
★ 12	Seat ring	1	Vulcanized on 1000mm to 1350mm types.
★ 13	O-ring	1	See Remark 2.
14	Gasket	1	
★ 15	O-ring	2	See Remark 2.
16	Ball	1	
17	Hollow bolt	1	
18	Lock nut	1	
g41	Key	1	

Remark 1: The ★ indicates recommended spare parts. They are supplied as "Seat ring set" with a small hexagonal speanner to remove hollow bolt (P.17).
Since the seat ring is vulcanized to the body of types 1000mm to 1350mm, please consult us if you wish to replace it.
Remark 2: The O-ring material (item numbers 13 and 15) should the same as the seatring (item number 12).

704G Actuator Selection Chart

■704G

Model	Category	Size (mm / inch) 50 / 2	65 / 2 1/2	80 / 3	100 / 4
1T	Standard / Heavy duty	1T-1			
2U	Standard / Heavy duty	2U-0		2U-1	
2G	Standard / Heavy duty	2G-1			
7E	Standard / Heavy duty	T35		T85	T200
7G,7F	Standard / Heavy duty	T85S	T200S		T380S
4 I	ON-OFF Control	4 I-00	4 I-0		4 I-1
4J	Standard / Heavy duty	SRJ-010			

Selection criteria		
	Standard	Select when none of the following heavy duty items apply.
	Heavy duty	Select when any of the following items apply. ①Powder or high viscosity fluid (crude oil, etc.), slurry ②Control specification (with positioner) ③Emergency open valve or pipe dead end valve

704G/722F/720F Pressure-Temperature Rating

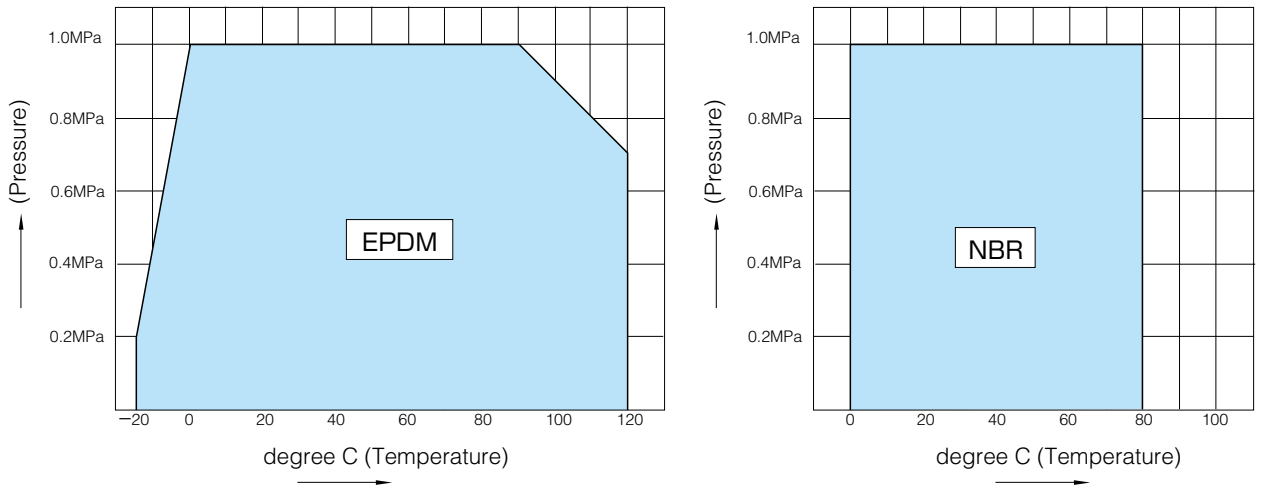

722F Actuator selection chart

■722F

Model	Category	Size (mm / inch)														
		125	150	200	250	300	350	400	450	500	550	600	650	700	750	800
		5	6	8	10	12	14	16	18	20	22	24	26	28	30	32
1T	Standard / Heavy duty	1T-2		1T-3												
2U,2S	Standard / Heavy duty	2U-2		2U-3		2U-4	2U-5				2U-6		MGH-4	MGH-4 1/2		
2G,2R	Standard / Heavy duty	2G-2		2G-3		2G-4	2R-3				2R-4					
7E,3A	Standard / Heavy duty	T200		T380		T380 / T750		TGA-125 / TGA-140		TGA-160		TGA-180 / TGA-200		TGA-220		TGA-250
7G,7F 3U,3K	Standard / Heavy duty	T380S		T750S		TG-10S / TG-12S		TG-14S		TG-20S						
4 I	ON-OFF Control	4 I-2		4 I-2.5		4 I-3				4 I-4						
4J,4L	Standard / Heavy duty	SRJ-020				SRJ-060		LTKD-01 0.2kW/MGH-3		LTKD-01 0.4kW/MGH-3		LTKD-02 0.75kW /MGH-4	LTKD-05 0.75kW/MGH-4	LTKD-05 0.75kW /MGH-5	LTKD-05 1.5kW /MGH-5	LTKD-1 1.5kW /MGH-5

Remark: For the 400mm type with the accessories below, type 4I-4 should be selected.
- Micom unit
- Servo unit
- Speed control unit
- Potentiometer

Selection criteria		
	Standard	Select when none of the following heavy duty items apply.
	Heavy duty	Select when any of the following items apply. ①Powder or high viscosity fluid (crude oil, etc.), slurry ②Control specification (with positioner) ③Emergency open valve or pipe dead end valve

720F Actuator selection chart

■720F

Model	Category	Size (mm / inch)					
		850	900	1000	1100	1200	1350
		34	36	40	44	48	54
2S	Standard / Heavy duty	MGH-5		MGH-6			MGH-7
3A	Standard / Heavy duty	TGA-220	TGA-250				
4L	Standard / Heavy duty	LTKD-1 1.5kW/ MGH-5	LTKD-1 2.2kW/ MGH-5	LTKD-1 1.5kW/MGH-6			LTKD-1 2.2kW /MGH-7

Selection criteria		
	Standard	Select when none of the following heavy duty items apply.
	Heavy duty	Select when any of the following items apply. ①Powder or high viscosity fluid (crude oil, etc.), slurry ②Control specification (with positioner) ③Emergency open valve or pipe dead end valve

704G / 722F / 720F Dimension List

704G

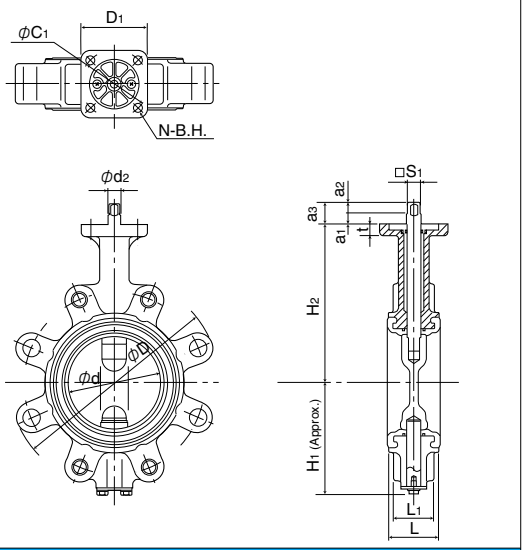

722F

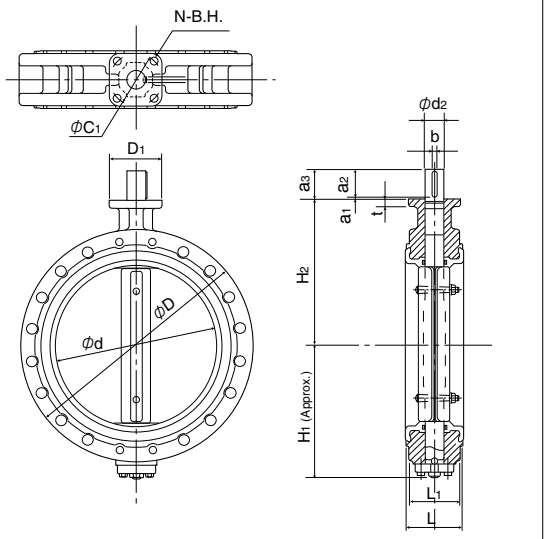

720F

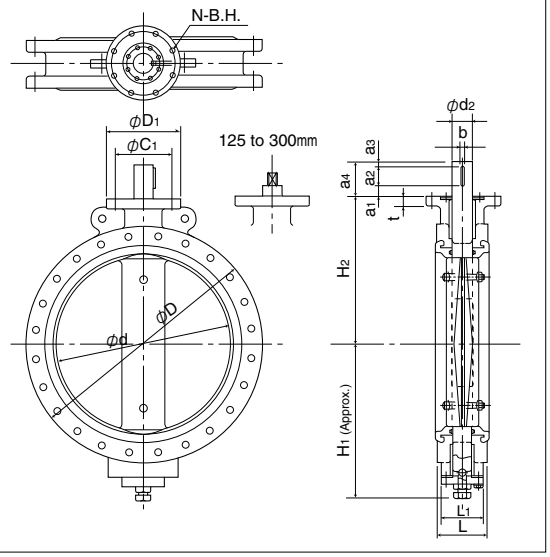

704G Dimensions

Nominal size		Dimension (mm)																Approx. Weight (kg)
mm	inch	φd	L	L1	φD	H1	H2	d2	a1	a2	a3	S1	D1	t	φC1	N	BH	
50	2	56	43	33	155	67	138	10	11	10.5	21.5	8	70	12	70	4	9	3.4
65	2 1/2	69	46	36	175	78	151	10	11	10.5	21.5	8	70	12	70	4	9	4.4
80	3	84	46	36	187	85(109)	156	12	11	11.5	22.5	10	70	12	70	4	9	5
100	4	104	52	42	220	117	167	14	11	11.5	22.5	12	70	12	70	4	9	7.7

Remark: Value in brackets is for JIS 10K flanges.

722F Dimensions

Nominal size		Dimension (mm)																Approx. Weight (kg)
mm	inch	φd	L	L1	φD	H1	H2	φd2	a1	a2	a3	S1	b	D1	t	φC1	N	BH	
125	5	129	100	—	250	139	165	18	11	16.5	27.5	14	—	102	14	102	—	11	18
150	6	154	100	—	280	157	180	18	11	16.5	27.5	14	—	102	14	102	—	11	19
200	8	194	100	—	330	181	210	22	10	20	30	18	—	102	14	102	—	11	37
250	10	250	110	—	400	221	250	30	5	30	35	24	—	102	14	102	—	11	43
300	12	296	110	—	445	251	280	32	5	30	35	24	—	125	16	125	—	13	52
350	14	334	120	110	490	298	320	40	6	45	54	—	12	140	20	140	4	19	70
400	16	384	130	116	560	334	360	46	6	56	65	—	14	140	20	140	4	19	93
450	18	435	150	134	620	356	390	50	6	70	79	—	14	140	20	140	4	19	132
500	20	482	160	140	675	382	420	50	6	70	79	—	14	140	25	140	4	19	182
550	22	531	170	156	745	418	460	55	6	70	79	—	16	165	25	165	4	23	225
600	24	581	170	156	795	476	490	55	6	70	79	—	16	165	25	165	4	23	270
650	26	627	170	156	845	586	510	65	10	60	75	—	18	260	32	220	4	23	415
700	28	670	180	160	905	629	560	75	10	80	95	—	20	320	35	280	8	23	585
750	30	723	190	170	970	659	590	75	10	80	95	—	20	320	35	280	8	23	680
800	32	772	200	180	1020	679	620	75	10	80	95	—	20	320	35	280	8	23	810

720F Dimensions

Nominal size		Dimension (mm)																	Approx. Weight (kg)
mm	inch	φd	L	L1	φD	H1	H2	φd2	a1	a2	a3	a4	b	φD1	t	φC1	N	BH	
850	34	822	210	—	1070	709	650	75	10	80	5	95	20	320	40	280	8	23	※
900	36	858	230	—	1120	759	685	75	10	80	5	95	20	320	40	280	8	23	※
1000	40	975	250	210	1235	819	745	95	10	100	10	120	24	320	45	280	8	23	※
1100	44	1070	280	210	1345	874	820	95	10	100	10	120	24	320	45	280	8	23	※
1200	48	1170	300	225	1465	948	880	95	10	100	10	120	24	320	45	280	8	23	※
1350	54	1314	330	300	1630	1030	960	120	60	140	10	210	32	320	45	280	8	23	※

※Please consult us.

Lock lever type 704G-1T(50mm to 100mm) / 722F-1T(125mm to 200mm)

Type	Nominal size		Dimension (mm)							Lever type	Approx. Mass (kg)
	mm	inch	φd	φD	L	H_1	H_2	H_3	W		
704G	50	2	56	155	43	67	138	66	200	1T-1	4
	65	2 1/2	69	175	46	78	151	66	200	1T-1	5
	80	3	84	187	46	85 (109)	156	66	200	1T-1	5.6 (6.1)
	100	4	104	220	52	117	167	66	200	1T-1	8.3
722F	125	5	129	250	100	139	165	92	300	1T-2	19.3
	150	6	154	280	100	157	180	92	300	1T-2	20.3
	200	8	194	330	100	181	210	97	350	1T-3	38.7

Remark: Value in brackets is for JIS 10K flanges.

■704G / 722F-1T

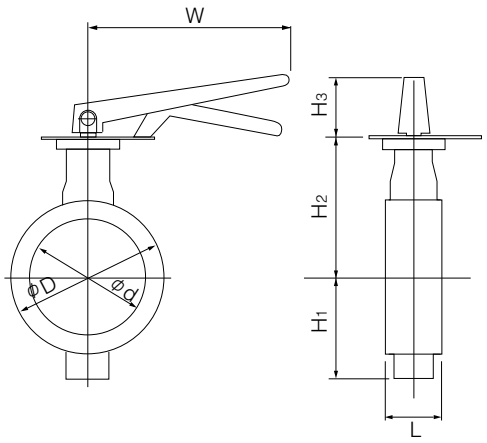

■1T Installation direction

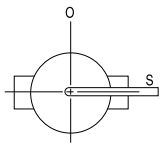	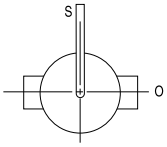	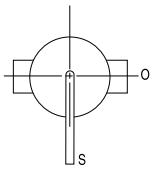	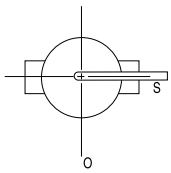
1TLS (standard)	1TLR	1TRS	1TRR
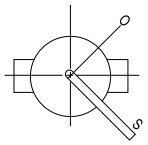	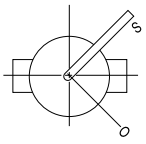	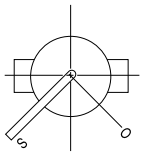	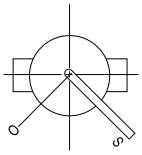
1TXS	1TXR	1TVS	1TVR

Worm Gear Type 704G-2U(50mm to 100mm) / 722F-2U(125mm to 600mm) / 722F-2S(650mm to 800mm) / 720F-2S(850mm to 1350mm)

■704G-2U (50mm to 100mm)

Type	Nominal size		Dimension (mm)										Gear type	Approx. Weight (kg)
	mm	inch	φd	φD	L	H1	H2	H3	E	K	F	φW		
704G	50	2	56	155	43	67	138	29.5	36	46	160	100	2U-0	5.7
	65	2 1/2	69	175	46	78	151	29.5	36	46	160	100	2U-0	6.7
	80	3	84	187	46	85 (109)	156	29.5	36	46	160	100	2U-1	7.3(7.8)
	100	4	104	220	52	117	167	29.5	36	46	160	100	2U-1	10

Remark: Value in brackets is for JIS 10K flanges.

■722F-2U (125mm to 600mm) / 722F-2S (650mm to 800mm) / 720F-2S (850mm to 1350mm)

Type	Nominal size		Dimension (mm)										Gear type	Approx. Weight (kg)
	mm	inch	φd	φD	L	H1	H2	H3	E	K	F	φW		
722F	125	5	129	250	100	139	165	34.5	44	53	173.5	160	2U-2	22.2
	150	6	154	280	100	157	180	34.5	44	53	173.5	160	2U-2	23.2
	200	8	194	330	100	181	210	41.5	67	75	198	200	2U-3	45
	250	10	250	400	110	221	250	41.5	67	75	198	200	2U-3	51
	300	12	296	445	110	251	280	48	87.5	90	222.5	200	2U-4	66
	350	14	334	490	120	298	320	50	90	105	266	280	2U-5	84
	400	16	384	560	130	334	360	50	90	105	266	280	2U-5	107
	450	18	435	620	150	356	390	50	90	105	266	280	2U-5	146
	500	20	482	675	160	382	420	50	90	105	266	280	2U-5	196
	550	22	531	745	170	418	460	61	113	140	352	400	2U-6	256
	600	24	581	795	170	476	490	61	113	140	352	400	2U-6	301
	650	26	627	845	170	586	510	65	140	198	400	450	MGH-4	463
	700	28	670	905	180	629	560	75	185	267	457	500	MGH-4 1/2	692
	750	30	723	970	190	659	590	75	185	267	457	500	MGH-4 1/2	782
	800	32	772	1020	200	679	620	75	185	267	457	500	MGH-4 1/2	907
720F	850	34	822	1070	210	709	650	100	210	293	490	500	MGH-5	1050
	900	36	858	1120	230	759	685	100	210	293	490	500	MGH-5	1150
	1000	40	975	1235	250	819	745	100	210	293	490	500	MGH-6	1384
	1100	44	1070	1345	280	874	820	100	210	293	490	500	MGH-6	1584
	1200	48	1168	1465	300	949	880	100	210	293	490	500	MGH-6	1984
	1350	54	1314	1630	330	1030	960	151	280	293	675	600	MGH-7	2330

■704G / 722F / 720F-2U / 2S

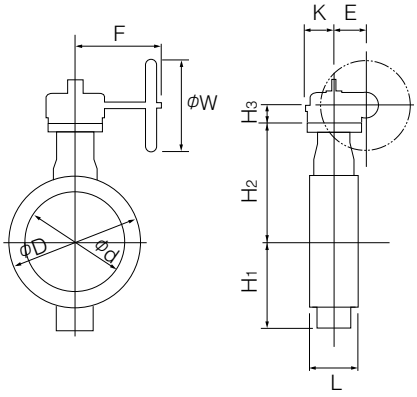

■2U / 2S Installation Direction

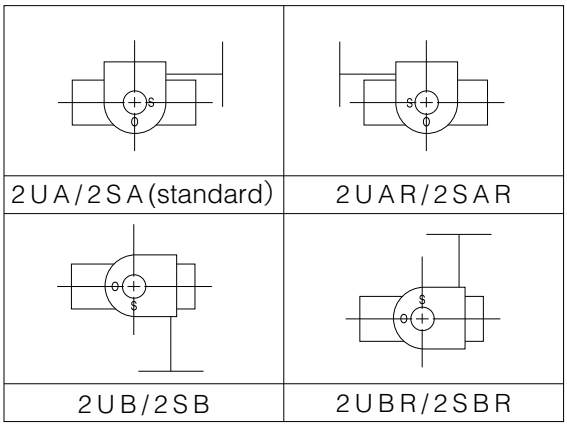

Center handle type 704G-2G(50mm to 100mm) / 722F-2G (125mm to 300mm) / 722F-2R (350mm to 600mm)

■704G-2G (50mm to 100mm)

Nominal size		Dimension (mm)							Center handle type	Approx. Mass (kg)
mm	inch	ϕd	ϕD	L	H_1	H_2	H_3	ϕW		
50	2	56	155	43	67	138	136	100	2G-1	6.3
65	2 1/2	69	175	46	78	151	136	100	2G-1	7.3
80	3	84	187	46	85 (109)	156	136	100	2G-1	7.9(8.4)
100	4	104	220	52	117	167	136	100	2G-1	10.6

Remark: Value in brackets is for JIS 10K flanges.

■722F-2G (125mm to 300mm) / 722F-2R (350mm to 600mm)

Nominal size		Dimension (mm)							Center handle type	Approx. Mass (kg)
mm	inch	ϕd	ϕD	L	H_1	H_2	H_3	ϕW		
125	5	129	250	100	139	165	136	100	2G-2	22
150	6	154	280	100	157	180	136	100	2G-2	23
200	8	194	330	100	181	210	151	200	2G-3	45
250	10	250	400	110	221	250	151	200	2G-3	51
300	12	296	445	110	251	280	161	200	2G-4	60
350	14	334	490	120	298	320	409	355	2R-3	106
400	16	384	560	130	334	360	409	355	2R-3	128
450	18	435	620	150	356	390	409	355	2R-3	168
500	20	482	675	160	382	420	409	355	2R-3	218
550	22	531	745	170	418	460	498	450	2R-4	283
600	24	581	795	170	476	490	498	450	2R-4	328

■704G / 722F-2G / 2R

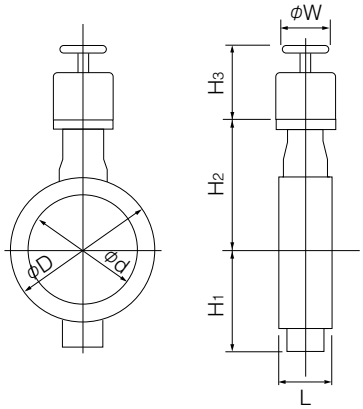

Double-acting Pneumatic Cylinder Type 704G-7E(50mm to 100mm) / 722F-7E(125mm to 350mm)

■Standard

Type	Nominal size		Dimension (mm)										Cylinder type	Approx. Weight (kg)
	mm	inch	φd	φD	L	H1	H2	H3	A	P	f1	f2		
704G	50	2	56	155	43	67	138	125	228	116	57	29	T35	5
	65	2 1/2	69	175	46	78	151	125	228	116	57	29	T35	6
	80	3	84	187	46	85 (109)	156	168	276	142	75	47	T85	10 (11)
	100	4	104	220	52	117	167	168	276	142	75	47	T85	13
722F	125	5	129	250	100	139	165	203	346	176	79	57	T200	27
	150	6	154	280	100	157	180	203	346	176	79	57	T200	28
	200	8	194	330	100	181	210	203	346	176	79	57	T200	46
	250	10	250	400	110	221	250	231	423	214	91	69	T380	58
	300	12	296	445	110	251	280	269	546	270	118	85	T750	77
	350	14	334	490	120	298	320	269	546	270	118	85	T750	103

Remark: Value in brackets is for JIS 10K flanges.

■Heavy duty

Type	Nominal size		Dimension (mm)										Cylinder type	Approx. Weight (kg)
	mm	inch	φd	φD	L	H1	H2	H3	A	P	f1	f2		
704G	50	2	56	155	43	67	138	125	228	116	57	29	T35	5
	65	2 1/2	69	175	46	78	151	125	228	116	57	29	T35	6
	80	3	84	187	46	85 (109)	156	168	276	142	75	47	T85	10 (11)
	100	4	104	220	52	117	167	203	346	176	79	57	T200	16
722F	125	5	129	250	100	139	165	203	346	176	79	57	T200	27
	150	6	154	280	100	157	180	203	346	176	79	57	T200	28
	200	8	194	330	100	181	210	231	423	214	91	69	T380	52
	250	10	250	400	110	221	250	269	546	270	118	85	T750	68
	300	12	296	445	110	251	280	269	546	270	118	85	T750	77

■704G / 722F-7E

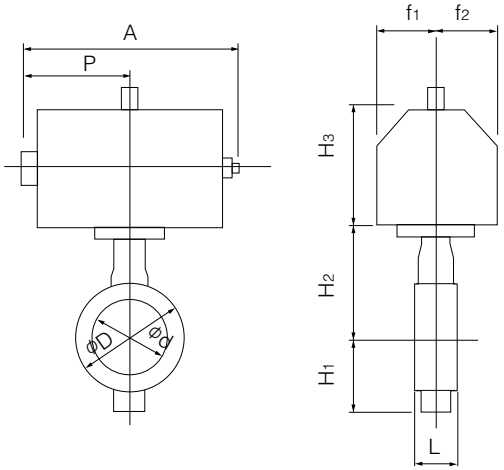

Selection criteria		
	Standard	Select when none of the following heavy duty items apply.
	Heavy duty	Select when any of the following items apply. ①Powder or high viscosity fluid (crude oil, etc.), slurry ②Control specification (with positioner) ③Emergency open valve or pipe dead end valve

■7E Installation Direction

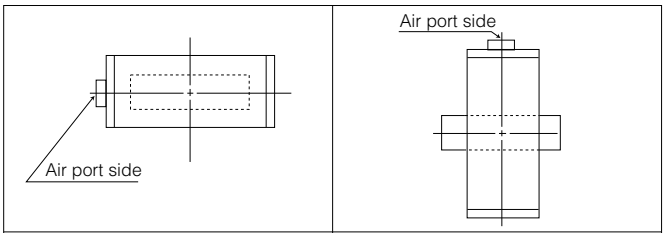

7 E A (standard)	7 E B

Double-acting pneumatic cylinder type 722F-3A(350mm to 800mm) / 720F-3A(850mm, 900mm)

■Standard

Type	Nominal size		Dimension (mm)										Cylinder type	Approx. Mass (kg)
	mm	inch	φd	φD	L	H1	H2	H3	A	P	f1	f2		
722F	400	16	384	560	130	334	360	364	743	381	100	164	TGA-125	134
	450	18	435	620	150	356	390	437	810	417	100	180	TGA-140	192
	500	20	482	675	160	382	420	465	939	483	130	202	TGA-160	289
	550	22	531	745	170	418	460	465	939	483	130	202	TGA-160	331
	600	24	581	795	170	476	490	478	1053	543	130	218	TGA-180	408
	650	26	627	845	170	586	510	478	1053	543	130	218	TGA-180	566
	700	28	670	905	180	629	560	570	1163	599	160	253	TGA-200	812
	750	30	723	970	190	659	590	570	1163	599	160	253	TGA-200	907
	800	32	772	1020	200	679	620	600	1248	642	160	270	TGA-220	1061
720F	850	34	822	1070	210	709	650	600	1248	642	160	270	TGA-220	1151
	900	36	858	1120	230	759	685	633	1381	707	160	299	TGA-250	1317

■Heavy duty

Type	Nominal size		Dimension (mm)										Cylinder type	Approx. Mass (kg)
	mm	inch	φd	φD	L	H1	H2	H3	A	P	f1	f2		
722F	350	14	334	490	120	298	320	364	743	381	100	164	TGA-125	111
	400	16	384	560	130	334	360	412	810	417	100	180	TGA-140	147
	450	18	435	620	150	356	390	465	939	483	130	202	TGA-160	239
	500	20	482	675	160	382	420	465	939	483	130	202	TGA-160	289
	550	22	531	745	170	418	460	478	1053	543	130	218	TGA-180	363
	600	24	581	795	170	476	490	525	1163	599	160	253	TGA-200	464
	650	26	627	845	170	586	510	600	1248	642	160	270	TGA-220	672
	700	28	670	905	180	629	560	600	1248	642	160	270	TGA-220	842
	750	30	723	970	190	659	590	633	1381	707	160	299	TGA-250	996
	800	32	772	1020	200	679	620	633	1381	707	160	299	TGA-250	1126

■722F / 720F-3A

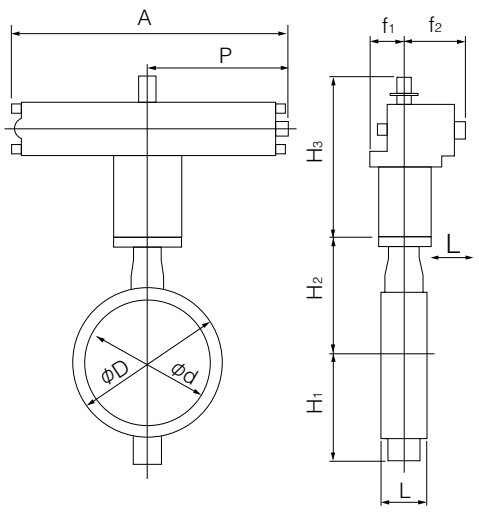

Selection criteria		
	Standard	Select when none of the following heavy duty items apply.
	Heavy duty	Select when any of the following items apply. ①Powder or high viscosity fluid (crude oil, etc.), slurry ②Control specification (with positioner) ③Emergency open valve or pipe dead end valve

■3A Installation direction

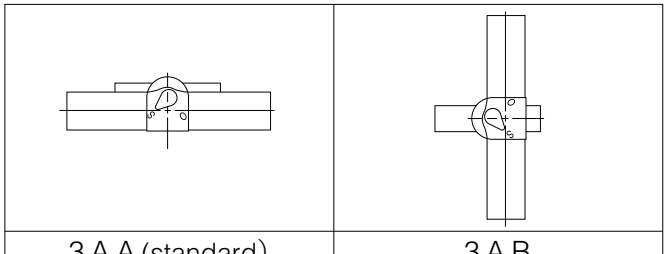

3 A A (standard)	3 A B

Single-acting Pneumatic Cylinder Type 704G-7G(Air to open: 50mm to 100mm) / 722F-7G(Air to open: 125mm to 200mm)
704G-7F(Air to close: 50mm to 100mm) / 722F-7F(Air to close: 125mm to 200mm)

■Standard

Type	Nominal size		Dimension (mm)										Cylinder type	Approx. Weight (kg)
	mm	inch	φd	φD	L	H1	H2	H3	A	P	f1	f2		
704G	50	2	56	155	43	67	138	168	364	183	75	47	T85S	10
	65	2 1/2	69	175	46	78	151	203	449	226	79	57	T200S	16
	80	3	84	187	46	85 (109)	156	203	449	226	79	57	T200S	16 (17)
	100	4	104	220	52	117	167	203	449	226	79	57	T200S	19
722F	125	5	129	250	100	139	165	231	550	276	91	69	T380S	38
	150	6	154	280	100	157	180	231	550	276	91	69	T380S	39
	200	8	194	330	100	181	210	269	723	360	118	85	T750S	70

Remark: Value in brackets is for JIS 10K flanges.

■Heavy Duty

Type	Nominal size		Dimension (mm)										Cylinder type	Approx. Weight (kg)
	mm	inch	φd	φD	L	H1	H2	H3	A	P	f1	f2		
704G	50	2	56	155	43	67	138	168	364	183	75	47	T85S	10
	65	2 1/2	69	175	46	78	151	203	449	226	79	57	T200S	16
	80	3	84	187	46	85 (109)	156	203	449	226	79	57	T200S	16 (17)
	100	4	104	220	52	117	167	231	550	276	91	69	T380S	27
722F	125	5	129	250	100	139	165	231	550	276	91	69	T380S	38
	150	6	154	280	100	157	180	231	550	276	91	69	T380S	39
	200	8	194	330	100	181	210	269	723	360	118	85	T750S	70

Remark: Value in brackets is for JIS 10K flanges.

Selection criteria		
	Standard	Select when none of the following heavy duty items apply.
	Heavy duty	Select when any of the following items apply. ①Powder or high viscosity fluid (crude oil, etc.), slurry ②Control specification (with positioner) ③Emergency open valve or pipe dead end valve

■704G / 722F-7G / 7F

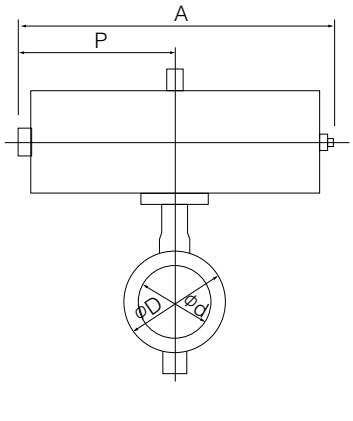

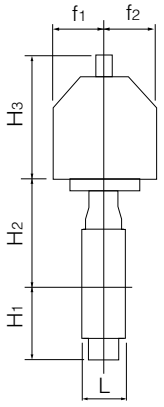

■7F Installation Direction

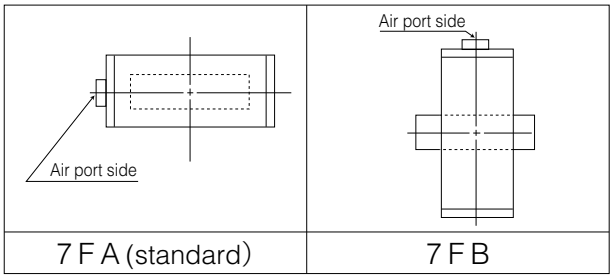

7 F A (standard)	7 F B

■7G Installation Direction

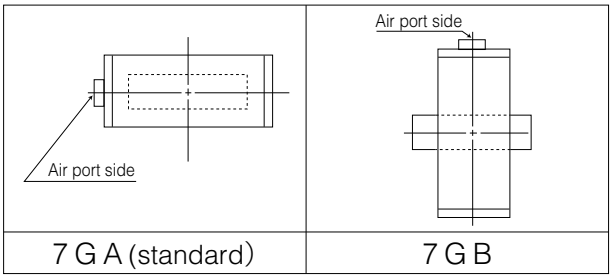

7 G A (standard)	7 G B

Single-acting pneumatic cylinder type 722F-3U(Air to open: 200mm to 600mm) / 722F-3K(Air to close: 200mm to 600mm)

■Standard

Nominal size		Dimension (mm)										Cylinder type	Approx. Mass (kg)
mm	inch	φd	φD	L	H1	H2	H3	A	P	f1	f2		
250	10	250	400	110	221	250	307	945	585	70	165	TG-10S	99
300	12	296	445	110	251	280	307	1080	720	94	206	TG-12S	153
350	14	334	490	120	298	320	307	1080	720	94	206	TG-12S	171
400	16	384	560	130	334	360	340	1255	865	131	257	TG-14S	291
450	18	435	620	150	356	390	340	1255	865	131	257	TG-14S	330
500	20	482	675	160	382	420	474	1655	1095	164	348	TG-20S	593
550	22	531	745	170	418	460	474	1655	1095	164	348	TG-20S	636
600	24	581	795	170	476	490	474	1655	1095	164	348	TG-20S	681

■Heavy duty

Nominal size		Dimension (mm)										Cylinder type	Approx. Mass (kg)
mm	inch	φd	φD	L	H1	H2	H3	A	P	f1	f2		
200	8	194	330	100	181	210	307	945	585	70	165	TG-10S	93
250	10	250	400	110	221	250	307	1080	720	94	206	TG-12S	144
300	12	296	445	110	251	280	307	1080	720	94	206	TG-12S	153
350	14	334	490	120	298	320	340	1255	865	131	257	TG-14S	267
400	16	384	560	130	334	360	340	1255	865	131	257	TG-14S	291
450	18	435	620	150	356	390	474	1655	1095	164	348	TG-20S	543
500	20	482	675	160	382	420	474	1655	1095	164	348	TG-20S	593
550	22	531	745	170	418	460	474	1655	1095	164	348	TG-20S	636
600	24	581	795	170	476	490	474	1655	1095	164	348	TG-20S	681

■722F-3U

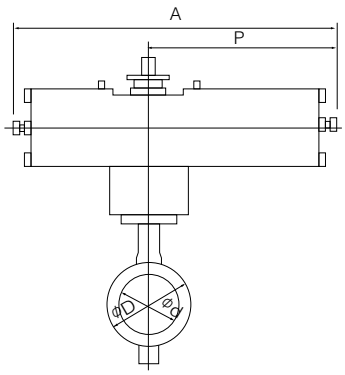

■722F-3K

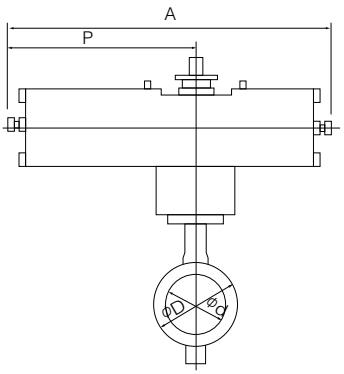

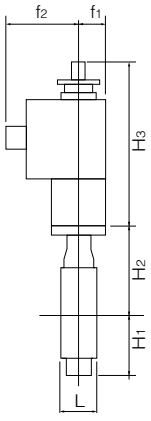

Selection criteria		
	Standard	Select when none of the following heavy duty items apply.
	Heavy duty	Select when any of the following items apply. ①Powder or high viscosity fluid (crude oil, etc.), slurry ②Control specification (with positioner) ③Emergency open valve or pipe dead end valve

■3U Installation direction

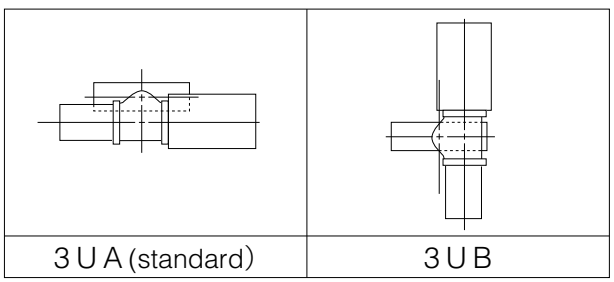

3UA (standard)	3UB

■3K Installation direction

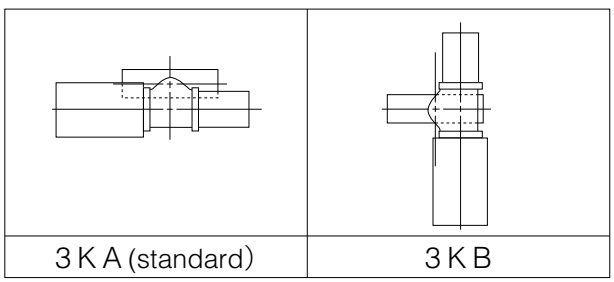

3KA (standard)	3KB

Single Phase Motor Type 704G-4 I(50mm to 100mm) / 722F-4 I(125mm to 500mm)

■704G-4 I

Nominal size		Dimension (mm)										Motor type	Approx. Weight (kg)
mm	inch	φd	φD	L	H_1	H_2	H_3	A	P	F	K		
50	2	56	155	43	67	138	150	202	100	85	54	4 I-0	7.6
65	2 1/2	69	175	46	78	151	150	202	100	85	54	4 I-0	8.6
80	3	84	187	46	85 (109)	156	150	202	100	85	54	4 I-0	9.2(11.9)
100	4	104	220	52	117	167	165	252	138	126	65	4 I-1	14.1

Remark: Value in brackets is for JIS 10K flanges.

■722F-4 I

Nominal size		Dimension (mm)										Motor type	Approx. Weight (kg)
mm	inch	φd	φD	L	H_1	H_2	H_3	A	P	F	K		
125	5	129	250	100	139	165	198	310	167	154	85	4 I-2	30
150	6	154	280	100	157	180	198	310	167	154	85	4 I-2	31
200	8	194	330	100	181	210	198	310	167	154	85	4 I-2.5	51
250	10	250	400	110	221	250	230	388	223	246	136	4 I-3	67
300	12	296	445	110	251	280	230	388	223	246	136	4 I-3	76
350	14	334	490	120	298	320	230	388	223	246	136	4 I-3	93
400	16	384	560	130	334	360	230	388	223	246	136	4 I-3	116
							255	388	223	246	136	4 I-4	122
450	18	435	620	150	356	390	230	388	223	246	136	4 I-4	161
500	20	482	675	160	382	420	230	388	223	246	136	4 I-4	211

Remark: For the 400mm type with the accessories below, type 4I-4 should be selected.
- Micom unit
- Servo unit
- Speed control unit
- Potentiometer

Selection criteria		
	Standard	Select when none of the following heavy duty items apply.
	Heavy duty	Select when any of the following items apply. ①Powder or high viscosity fluid (crude oil, etc.), slurry ②Control specification (with positioner) ③Emergency open valve or pipe dead end valve

■704G / 722F-4 I

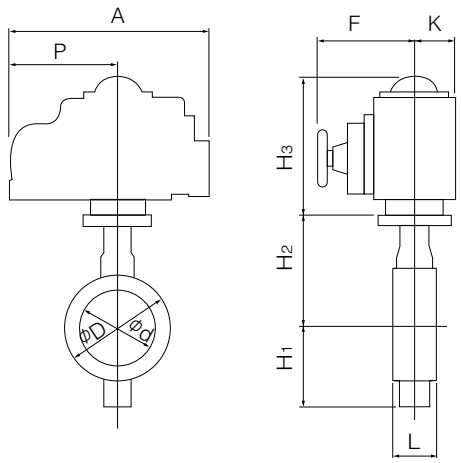

■4I Installation Direction

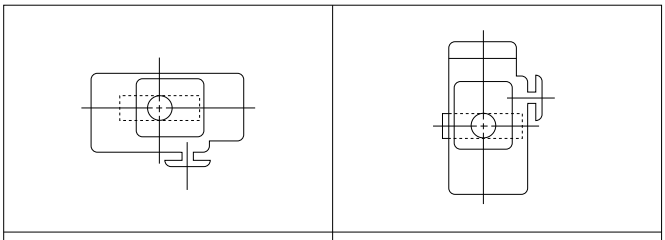

4 I A (standard)	4 I B

Three phase motor actuator type 704G-4J(50mm to 100mm)

■704G-4J

Nominal size		Dimension (mm)											Motor type	Approx. Mass (kg)
mm	inch	φd	φD	L	H_1	H_2	H_3	H_4	A	P	F	K		
50	2	56	155	43	67	138	218	3.2	353	167	286	104	SRJ-010	17.1
65	2 1/2	69	175	46	78	151	218	3.2	353	167	286	104	SRJ-010	18.1
80	3	84	187	46	85 (109)	156	218	3.2	353	167	286	104	SRJ-010	18.7(19.2)
100	4	104	220	52	117	167	218	3.2	353	167	286	104	SRJ-010	21.2

Remark: Value in brackets is for JIS 10K flanges.

■704G-4J

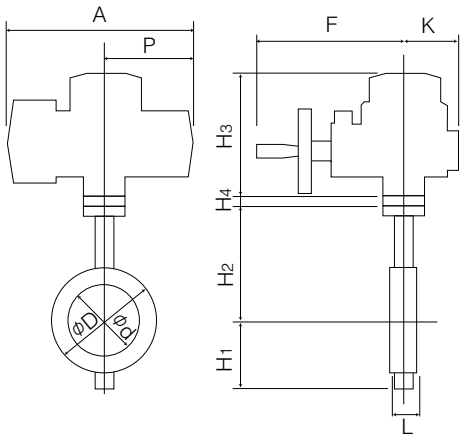

■4J Installation direction

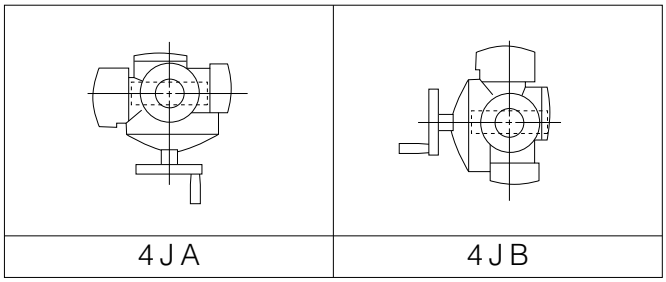

Three Phase Motor Actuator Type 722F-4L(350mm to 800mm) / 720F-4L(850mm to 1350mm)

Type	Nominal size		Dimension (mm)											Cylinder type	Approx. Weight (kg)
	mm	inch	φd	φD	L	H_1	H_2	H_3	E	K	F	M	P		
722F	350	14	334	490	120	298	320	488	117	164	533	363	230	LTKD-01 0.2kW/ MGH-3	213
	400	16	384	560	130	334	360	488	117	164	533	363	230	LTKD-01 0.2kW/ MGH-3	230
	450	18	435	620	150	356	390	488	117	164	533	373	230	LTKD-01 0.4kW/ MGH-3	268
	500	20	482	675	160	382	420	488	117	164	533	373	230	LTKD-01 0.4kW/ MGH-3	303
	550	22	531	745	170	418	460	558	140	198	592	400	230	LTKD-02 0.75kW/ MGH-4	411
	600	24	581	795	170	476	490	590	140	198	637	440	360	LTKD-05 0.75kW/ MGH-4	500
	650	26	627	845	170	586	510	569	140	198	637	440	360	LTKD-05 0.75kW/ MGH-4	600
	700	28	670	905	180	629	560	639	210	293	748	440	360	LTKD-05 0.75kW/ MGH-5	885
	750	30	723	970	190	659	590	639	210	293	748	477	360	LTKD-05 1.5kW/ MGH-5	980
	800	32	772	1020	200	679	620	679	210	293	799	537	410	LTKD-1 1.5kW/ MGH-5	1180
720F	850	34	822	1070	210	709	650	680	210	293	799	537	410	LTKD-1 1.5kW/ MGH-5	1192
	900	36	858	1120	230	759	685	680	210	293	799	537	410	LTKD-1 1.5kW/ MGH-5	1269
	1000	40	975	1235	250	819	745	700	210	293	762	537	425	LTKD-1 1.5kW/ MGH-6	1670
	1100	44	1070	1345	280	874	820	700	210	293	762	537	425	LTKD-1 1.5kW/ MGH-6	1870
	1200	48	1170	1465	300	948	880	700	210	293	762	537	425	LTKD-1 1.5kW/ MGH-6	2270
	1350	54	1314	1630	330	1030	960	700	280	293	1042	540	425	LTKD-1 2.2kW/ MGH-7	2650

■722F / 720F-4L

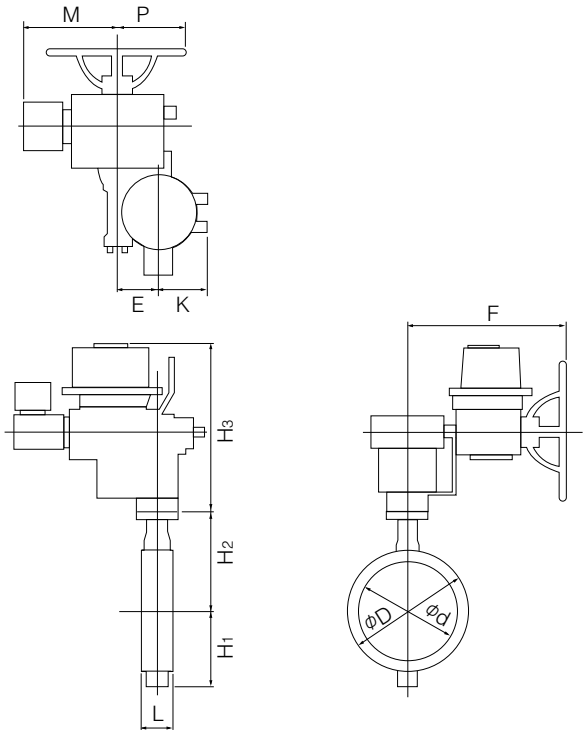

■4L Installation Direction

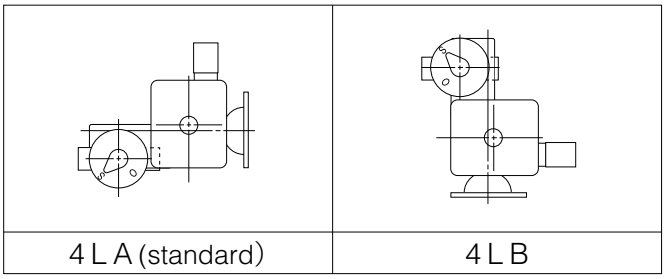

4 L A (standard)	4 L B

704G / 722F / 720F Cv value / Pressure loss coefficient

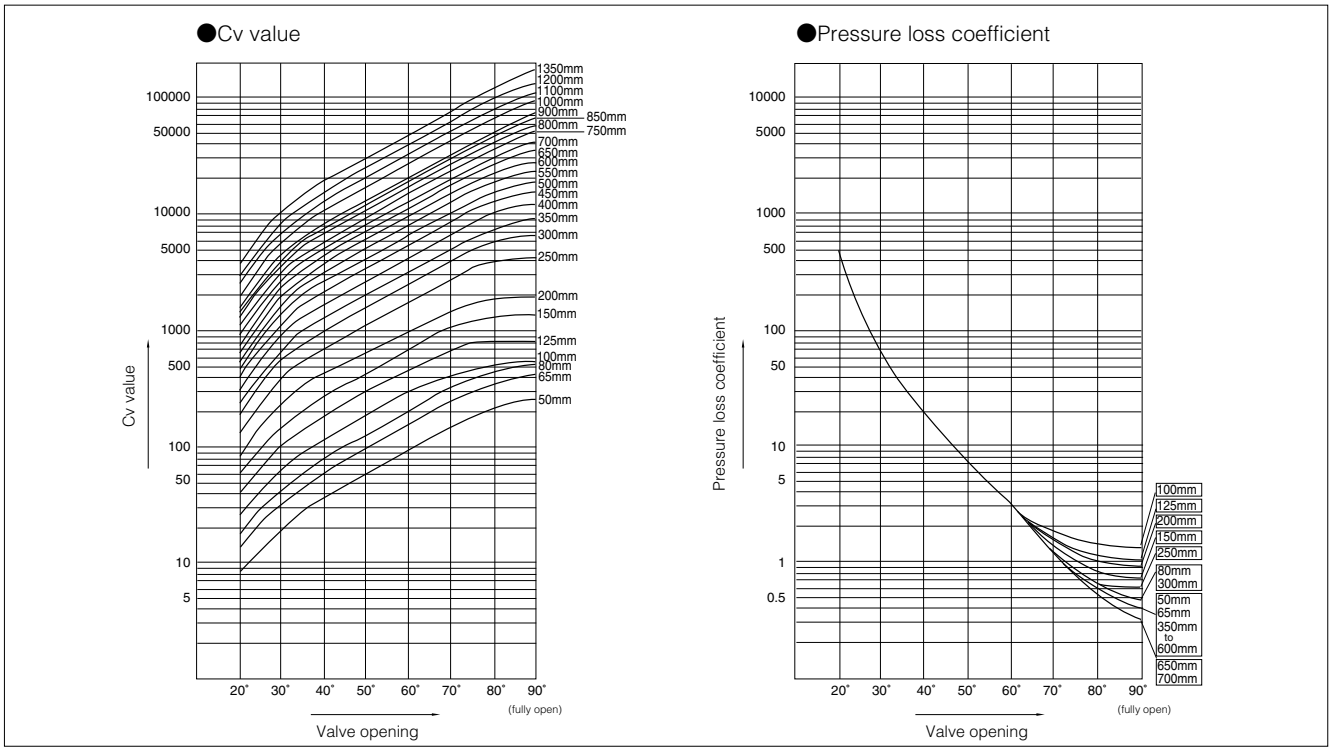

704G / 722F / 720F Cv value

Nominal size	Nominal size		Valve opening							
	mm	inch	20°	30°	40°	50°	60°	70°	80°	90°
704G	50	2	8	15	25	40	64	103	160	200
	65	2 1/2	12	25	41	64	102	162	260	320
	80	3	15	33	57	95	163	271	450	580
	100	4	27	58	100	162	269	444	749	880
722F	125	5	40	102	180	297	457	692	767	800
	150	6	61	146	272	429	710	1039	1295	1350
	200	8	71	239	417	646	969	1457	1836	1950
	250	10	139	375	693	1135	1746	2724	3855	4200
	300	12	184	544	995	1593	2461	3909	5571	6400
	350	14	215	678	1248	1982	3028	4827	7054	9000
	400	16	304	905	1656	2649	4094	6460	9782	12000
	450	18	381	1158	2136	3433	5274	8120	12430	15000
	500	20	496	1440	2631	4209	6434	10085	15436	17500
	550	22	571	1765	3234	5141	7833	12066	17999	22500
	600	24	688	2074	3815	6126	9433	14595	21897	26500
	650	26	817	2441	4473	7159	11013	17254	26972	32500
	700	28	934	2807	5122	8152	12511	19728	30929	39000
	750	30	935	3220	5965	9450	14328	22687	38260	52000
	800	32	1200	3721	6791	10771	16553	26976	43316	59000
720F	850	34	1164	4018	7516	12063	18567	29284	46350	66000
	900	36	1358	4497	8298	13177	20139	32362	53126	73000
	1000	40	1784	5835	10740	17060	26110	42070	68860	95000
	1100	44	2075	7030	13020	20680	31530	50420	83340	114000
	1200	48	2570	8520	15710	24900	37930	60280	98640	138000
	1350	54	3385	10180	18810	30490	47840	75750	119000	173000

704G / 722F / 720F Pressure Loss Coefficient

Nominal size	Nominal size		Valve opening							
	mm	inch	20°	30°	40°	50°	60°	70°	80°	90°
704G	50	2	257	68	25	10	4	2	1	0.4
	65	2 1/2	310	75	28	11	4	2	1	0.4
	80	3	394	83	27	10	3	1	0.4	0.2
	100	4	350	78	26	10	4	1	0.4	0.3
722F	125	5	399	61	19	7	3	1	1	1
	150	6	336	58	17	7	2	1	1	1
	200	8	745	65	22	9	4	2	1	1
	250	10	464	63	19	7	3	1	1	1
	300	12	545	62	19	7	3	1	1	0.4
	350	14	615	62	18	7	3	1	1	0.3
	400	16	540	61	18	7	3	1	1	0.3
	450	18	560	61	18	7	3	1	1	0.3
	500	20	510	61	18	7	3	1	1	0.4
	550	22	571	60	18	7	3	1	1	0.3
	600	24	561	62	18	7	3	1	1	0.3
	650	26	553	62	18	7	3	1	1	0.4
	700	28	573	63	19	8	3	1	1	0.3
	750	30	758	64	19	7	3	1	0.5	0.3
	800	32	599	62	19	7	3	1	0.5	0.3
720F	850	34	815	68	20	8	3	1	0.5	0.3
	900	36	756	69	20	8	3	1	0.5	0.3
	1000	40	645	60	18	7	3	1	0.4	0.2
	1100	44	701	61	18	7	3	1	0.4	0.2
	1200	48	658	60	18	7	3	1	0.4	0.2
	1350	54	611	68	20	8	3	1	0.5	0.2

704G / 722F / 720F Applicable flange standard

Type	Nominal size		JIS		ANSI		BS4504	DIN
	mm	inch	5K	10K	125Lb	150Lb	PN10	NP10
704G	50	2	○	○	○	○	○	○
	65	2 1/2	○	○	○	○	○	○
	80	3	◎	○	◎	◎	○	○
	100	4	○	○	○	○	○	○
722F	125	5	○	○	◎	◎	○	○
	150	6	○	○	◎	◎	○	○
	200	8	○	○	◎	◎	◎	◎
	250	10	○	○	◎	◎	○	○
	300	12	○	○	◎	◎	○	○
	350	14	○	○	◎	◎	◎	◎
	400	16	○	○	◎	◎	○	○
	450	18	○	○	◎	◎	○	–
	500	20	○	○	◎	◎	◎	◎
	550	22	○	○	–	–	–	–
	600	24	○	○	◎	◎	◎	◎
	650	26	○	○	Consult us if the flange standard is not JIS 5K/10K in 650mm type and over.			
	700	28	○	○				
	750	30	○	○				
	800	32	○	○				
720F	850	34	○	○				
	900	36	○	○				
	1000	40	○	○				
	1100	44	○	○				
	1200	48	○	○				
	1350	54	○	○				

○ : Can be used without flange drilling.
◎ : Tapped holes only. (ANSI body only)

704G / 722F / 720F Applicable Pipe List in Case of A

Type	Nominal size		SGP	STPY	Sch20	Sch40	Sch10S	Sch20S	Minimum internal diameter of piping (mm)
	mm	inch							
704G	50	2	○	–	○	○	○	○	34
	65	2 1/2	○	–	○	○	○	○	51
	80	3	○	–	○	○	○	○	70
	100	4	○	–	○	○	○	○	91
722F	125	5	○	–	○	○	○	○	118
	150	6	○	–	○	○	○	○	143
	200	8	○	–	○	○	○	○	187
	250	10	○	–	○	○	○	○	240
	300	12	○	–	○	○	○	○	286
	350	14	○	○	○	○	–	–	322
	400	16	○	○	○	○	–	–	372
	450	18	○	○	○	○	–	–	421
	500	20	○	○	○	○	–	–	463
	550	22	–	○	○	○	–	–	509
	600	24	–	○	○	○	–	–	566
	650	26	–	○	○	○	–	–	612
	700	28	–	○	–	–	–	–	653
	750	30	–	○	–	–	–	–	705
	800	32	–	○	–	–	–	–	754
720F	850	34	–	○	–	–	–	–	803
	900	36	–	○	–	–	–	–	834
	1000	40	–	○	–	–	–	–	950
	1100	44	–	○	–	–	–	–	1040
	1200	48	–	○	–	–	–	–	1138
	1350	54	–	○	–	–	–	–	1277

Remark 1: ○=Applicable
Remark 2: Butterfly valves are inserted into a pipe that was fitted with the disc when fully open.
In cases where you are using a pipe or flange that is less than the minimum inner pipe diameter, use is still possible if means are taken such as inserting a spacer between the valve and flange.
For details, please consult us.

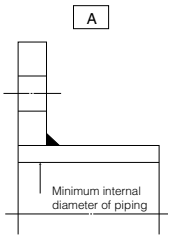

704G / 722F / 720F Applicable pipe list in case of B

Type	Nominal size		SGP	STPY	Sch20	Sch40	Sch10S	Sch20S
	mm	inch						
704G	50	2	○	–	○	○	○	○
	65	2 1/2	○	–	○	○	○	○
	80	3	○	–	○	○	○	○
	100	4	○	–	○	○	○	○
722F	125	5	○	–	○	○	○	○
	150	6	○	–	○	○	○	○
	200	8	○	–	○	○	○	○
	250	10	○	–	○	○	○	○
	300	12	○	–	○	○	○	○
	350	14	○	○	○	○	–	–
	400	16	○	○	○	○	–	–
	450	18	○	○	○	○	–	–
	500	20	○	○	○	○	–	–
	550	22	–	○	○	○	–	–
	600	24	–	○	○	○	–	–
	650	26	–	○	○	○	–	–
	700	28	–	○	–	–	–	–
	750	30	–	○	–	–	–	–
	800	32	–	○	–	–	–	–
720F	850	34	–	○	–	–	–	–
	900	36	–	○	–	–	–	–
	1000	40	–	○	–	–	–	–
	1100	44	–	○	–	–	–	–
	1200	48	–	○	–	–	–	–
	1350	54	–	○	–	–	–	–

Remark 1: ○=Applicable

Remark 2: Butterfly valves are inserted into a pipe that was fitted with the disc when fully open.
In cases where you are using a pipe or flange that is less than the minimum inner pipe diameter, use is still possible if means are taken such as inserting a spacer between the valve and flange.
For details, please consult us.

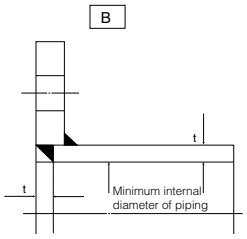

704G / 722F / 720F Piping Bolts Sizes

Type	Nominal size		JIS 5K		JIS 10K	
	mm	inch	Hexagon Bolts and Nuts	Hexagon Bolts	Hexagon Bolts and Nuts	Hexagon Bolts
704G	50	2	———	8-M12×30×25	———	8-M16×35×30
	65	2 1/2	———	8-M12×35×30	———	8-M16×35×30
	80	3	———	8-M16×35×30	———	16-M16×35×30
	100	4	———	16-M16×40×35	———	16-M16×40×35
722F	125	5	8-M16×60×38	8-M16×40×35	8-M20×65×46	8-M20×45×37
	150	6	8-M16×60×38	8-M16×40×35	8-M20×70×46	8-M20×50×42
	200	8	8-M20×65×46	8-M20×50×42	16-M20×70×46	8-M20×50×42
	250	10	16-M20×70×46	8-M20×50×42	16-M22×75×50	8-M22×50×42
	300	12	16-M20×70×46	8-M20×50×42	24-M22×75×50	8-M22×50×42
	350	14	16-M22×80×50	8-M22×55×47	24-M22×80×50	8-M22×55×47
	400	16	24-M22×85×50	8-M22×55×47	24-M24×90×54	8-M24×60×50
	450	18	24-M22×90×50	8-M22×60×50	32-M24×100×54	8-M24×65×54
	500	20	32-M22×90×50	8-M22×60×50	32-M24×100×54	8-M24×70×54
	550	22	32-M24×100×54	8-M24×65×54	32-M30×110×66	8-M30×70×54
	600	24	32-M24×100×54	8-M24×65×54	40-M30×110×66	8-M30×70×54
	650	26	40-M24×100×54	8-M24×70×54	40-M30×110×66	8-M30×80×66
	700	28	40-M24×100×54	8-M24×70×54	40-M30×110×66	8-M30×80×66
	750	30	40-M30×110×66	8-M30×80×66	40-M30×115×66	8-M30×80×66
	800	32	40-M30×110×66	8-M30×80×66	48-M30×115×66	8-M30×80×66
720F	850	34	40-M30×110×66	8-M30×80×66	48-M30×115×66	8-M30×80×66
	900	36	32-M30×115×66	16-M30×75×66	40-M30×120×66	16-M30×80×66
	1000	40	40-M30×130×72	16-M30×90×66	40-M36×145×84	16-M36×110×78
	1100	44	40-M30×130×72	16-M30×90×66	40-M36×145×84	16-M36×110×78
	1200	48	48-M30×130×72	16-M30×90×66	48-M36×150×84	16-M36×110×78
	1350	54	56-M30×135×72	16-M30×90×66	56-M42×165×96	16-M42×110×90

Remarks:
1. The bolt for valve positioning uses the screw hole.
2. The hexagon bolt is used in the screw hole part for valve positioning.
3. Please use a hexagon nut with 80% threading.
4. For uses other than marine, use SS400 as the bolt (and nut) material.

Example

Hexagon bolts: 4 - M30 × 95 × 65

N M L S

Hexagon bolts

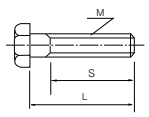

MEMO

KRV

DN1000
DN2000
(40" to 80")

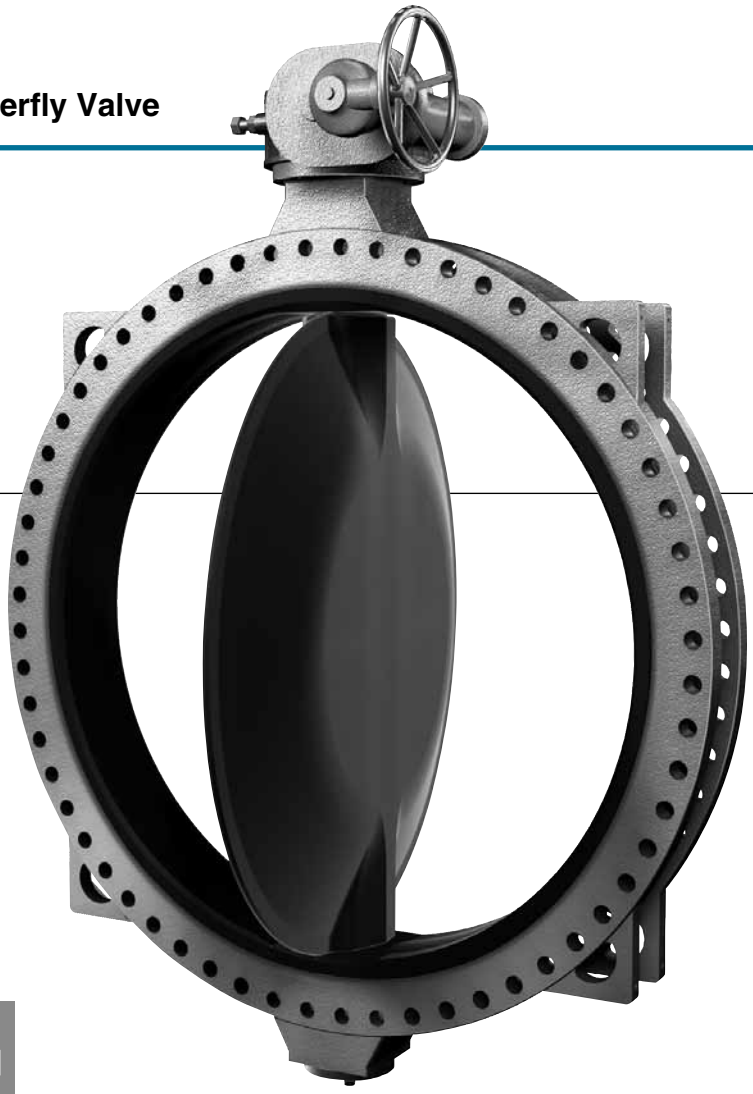

Valve nominal size

1000 to 2000mm

Max.working pressure MPa

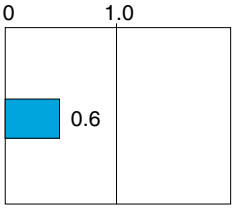

Working temperature range ℃

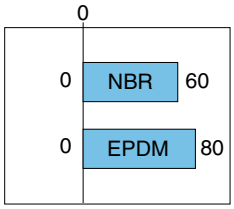

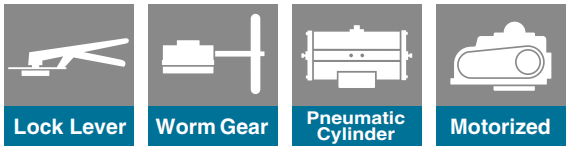

Features and Benefits

Lightweight design

Lightweight, slim disc design provides high Cv values and low pressure loss figures at the fully open position.

Rubber lined

The valve body is rubber lined to isolate the body material from the flow media and increase valve longevity.

Multi layered stem bearings

The multi layered stem bearings ensure that optimum torque figures are delivered and maintained.

Bi-directional flow

Seals flow in both directions. Concentric butterfly valve design makes it suitable for bi-directional flow.

Ease of maintenance

The replaceable seat ring makes maintenance easy and reduces maintenance costs.

General Description

Large diameter rubber seated concentric disc butterfly valve. Cost-effective design combined with TOMOE reliability.

Expanded view of components

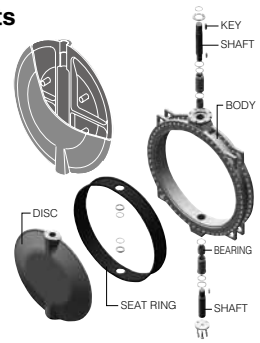

Detail of KRV 1600

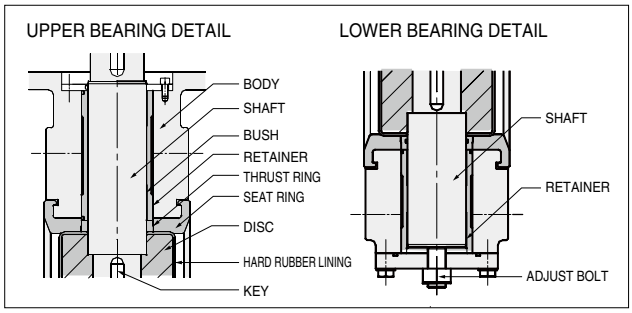

Standard Specifications

Valve style		Double flanged concentric butterfly valve
Valve size range		DN1000 – 2000 (40 – 80 inch)
Face-to-face dimensions		280mm (Manufacturer Standard)
End connection		EN 1092 PN6, 10 AWWAC207 Class D. Please consult us for other end connections
Maximum pressure		0.6MPa
Test pressure	Shell strength test ※1	0.9MPa
	Seat leakage test ※1	0.9MPa
Temperature range	NBR seat	0 to 60 degrees C (intermittent service: Max 80 degrees C)
	*EPDM seat	0 to 70 degrees C (intermittent service: Max 100 degrees C)
Standard materials	Body ※1	FCD450-10 (A636 gr. 60, 40, 18), A216 WCB
	Disc ※1	FCD450-10 (A536 gr. 60, 40, 18) A351 gr CF8M FCD450-10+ hard rubber lining, B148-C95800
	Shaft ※1	SUS 403
	Seat ring	*EPDM or NBR
Main application		Water (sea water, clean mater, industrial water) air
Flow direction		Bi-directional
Actuator		Worm gear, air cylinder, electric motor operator
Coating		TOMOE primer grey (Lacquer N7)

※1 Other product configurations are available on request, please consult your local sales office.
* Never use an EPDM rubber seat ring if the valve is being used for oil or for a fluid containing even a slight amount of oil.

KRV Dimensions

Nominal size		Dimension (mm)																				Approx Weight (kg)
mm	inch	φd	φD	φC	φD1	φC1	d2	L	H2	H1	l	T	t	b	t1	N1	K	N2	S	N3	B	
1000	40	951	1175	1120	300	254	70	280	713	693	75	50	30	22	9	24	30	4	M27	8	18	665
1100	44	1076	1300	1240	300	254	75	280	775	751	78	50	30	25	10	24	30	4	M27	8	18	761
1200	48	1176	1405	1340	300	254	80	280	828	801	89	50	30	25	10	28	33	4	M30	8	18	845
1300	52	1274	1525	1450	350	298	85	280	893	861	95	55	40	28	12	28	36	4	M33	8	22	1035
1400	56	1374	1630	1560	350	298	90	280	945	913	107	55	40	28	12	32	36	4	M33	8	22	1150
1500	60	1480	1730	1660	350	298	95	280	993	978	120	55	40	28	12	32	36	4	M33	8	22	1240
1600	64	1568	1830	1760	415	356	100	280	1050	1027	132	60	40	28	12	36	36	4	M33	8	33	1460
1800	72	1774	2045	1970	415	356	115	280	1157	1142	136	60	40	32	13	40	39	4	M36	8	33	1825
2000	80	1974	2265	2180	415	356	125	280	1267	1257	157	60	40	32	12	44	42	4	M39	8	33	2263

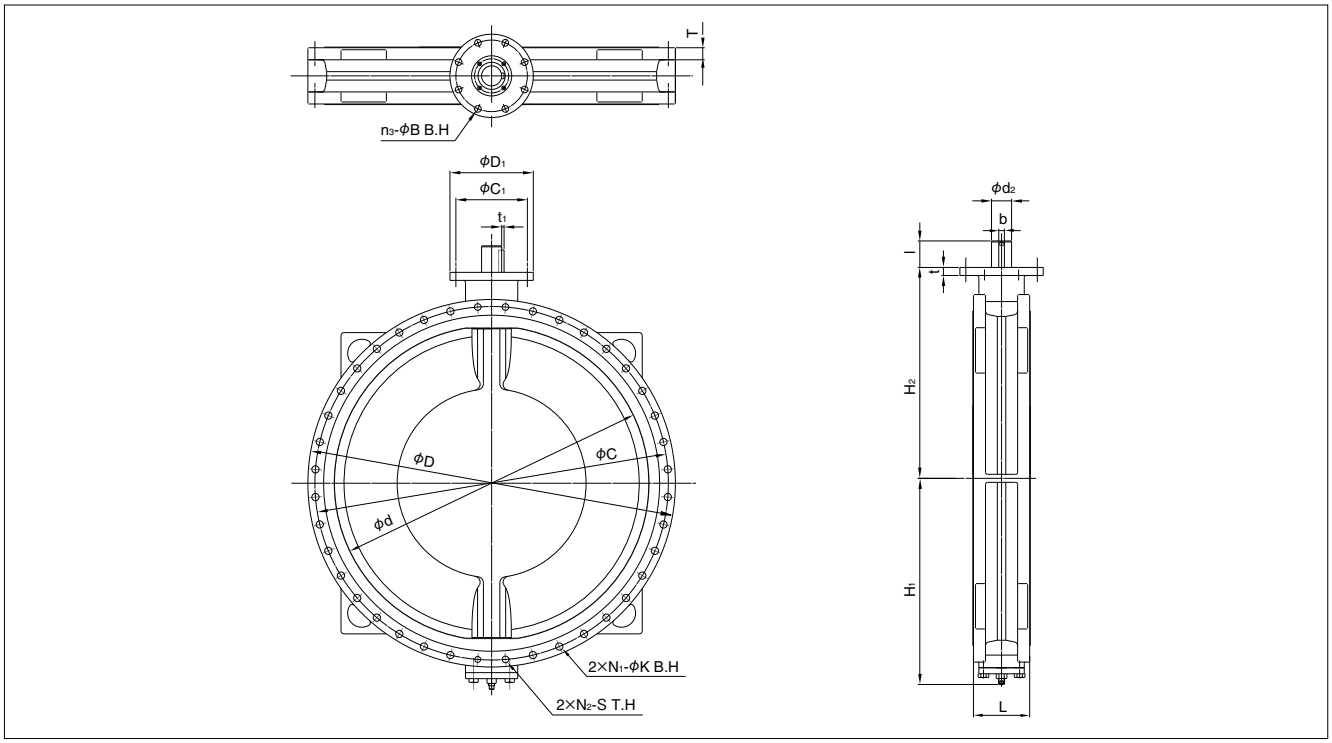

227P

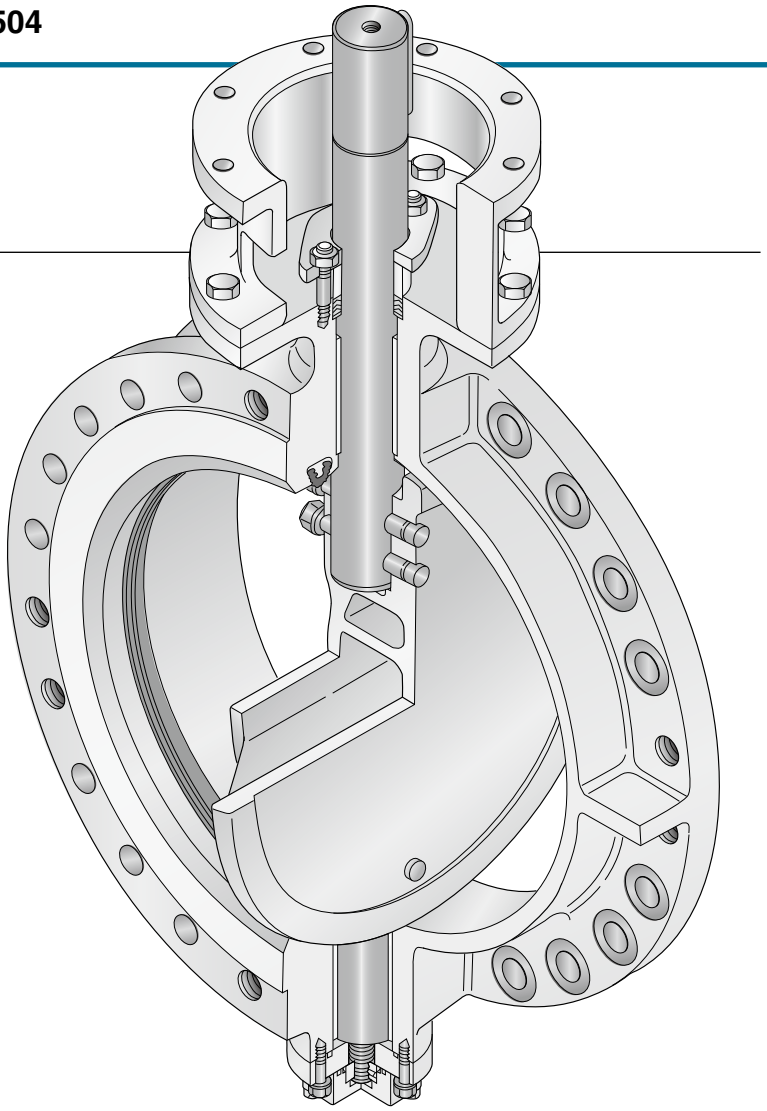

Worm Gear | Pneumatic Cylinder | Motorized

Features and Benefits

A unique structure and low cost with proven reliability in water works, power generation, desalination plants and other industrial applications.

Unique seat ring

Unique seat ring structure provides low torque and long life. Grooves are molded on the sealing surface of the seat to reduce operating torque. An original retaining method is adopted. Plastic resin is injected from behind the seat ring to stiffen it. The resin-reinforced seat ring keeps constant compression through the entire disc to assure tight shut off.

Arch-shaped disc

A light weight and highly rigid arch-shaped disc allows fluid to pass through it when a valve opens. The valve opening area (Cv value) increases by approximately 15% compared to conventional designs. The pressure drop is also minimized.

Easy seat repair

Generally, the seat ring can be used for over 10 years without replacement. If any leakage is found, it can be easily repaired using an injection kit to inject resin into the seat ring surface at the point of leakage. The seat can also be replaced by a new seat with the injection kit.

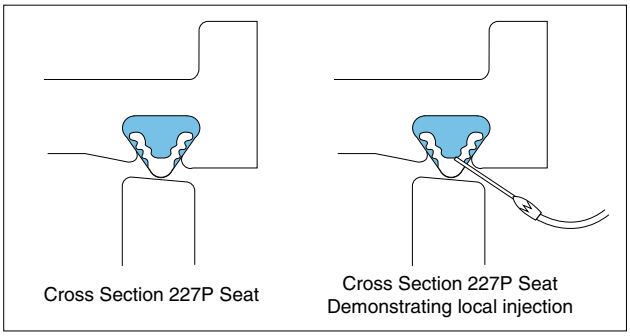

Cross Section 227P Seat

Cross Section 227P Seat
Demonstrating local injection

Custom-Mode Design

Costom mode desing, including the use of special materidls, special face to face dimentions are aviable upon request.

Standard Specifications

Valve nominal size		650mm to 2400mm
Applicable fiange standard		JIS 5K/10K, DIN NP10/NP16, JPI 150Lb, ANSI 125Lb/150Lb, AWWA
Max.Working pressure		1.6MPa
Pressure test	Body shell	2.4MPa (water pressure, max.)
	Seat leak	1.8MPa (max.)
Working temperature range		−10 to 80 degrees C（NBR）
Woking temperature in continuous use ※1		0 to 60 degrees C（NBR）
Standard materials	Body	FCD450, SCPH2
	Disc	SCS13, CAC702
	Stem	SUS304, SUS63, Monel K-500
	Seat ring	NBR, *EPDM
Special specification		Rubber lined body interior
Coating		Primer（Munsell N7）

※ Consult us with specifications if dimensions for actuator are required.
※ Actuators such as manual, pneumatic, electric and hydraulic ones can be selected upon adapt of detailed specifications.
※1."Woking temperature in continuous use" stands for the temperature continuously kept exceeding one hour.
*No EPDM seat can be used for fluid containing any oil.

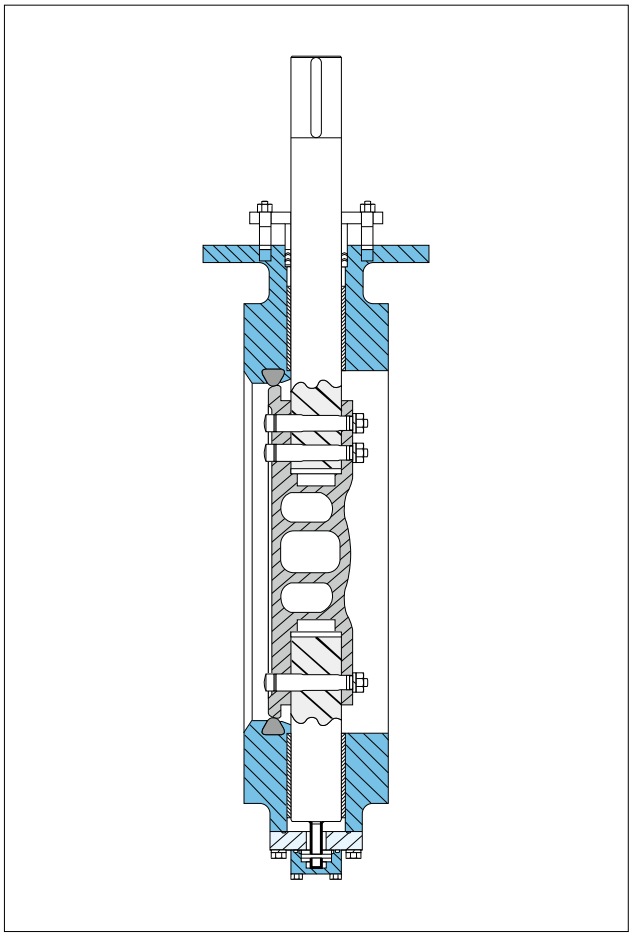

227P

Large diameter / AWWA C504

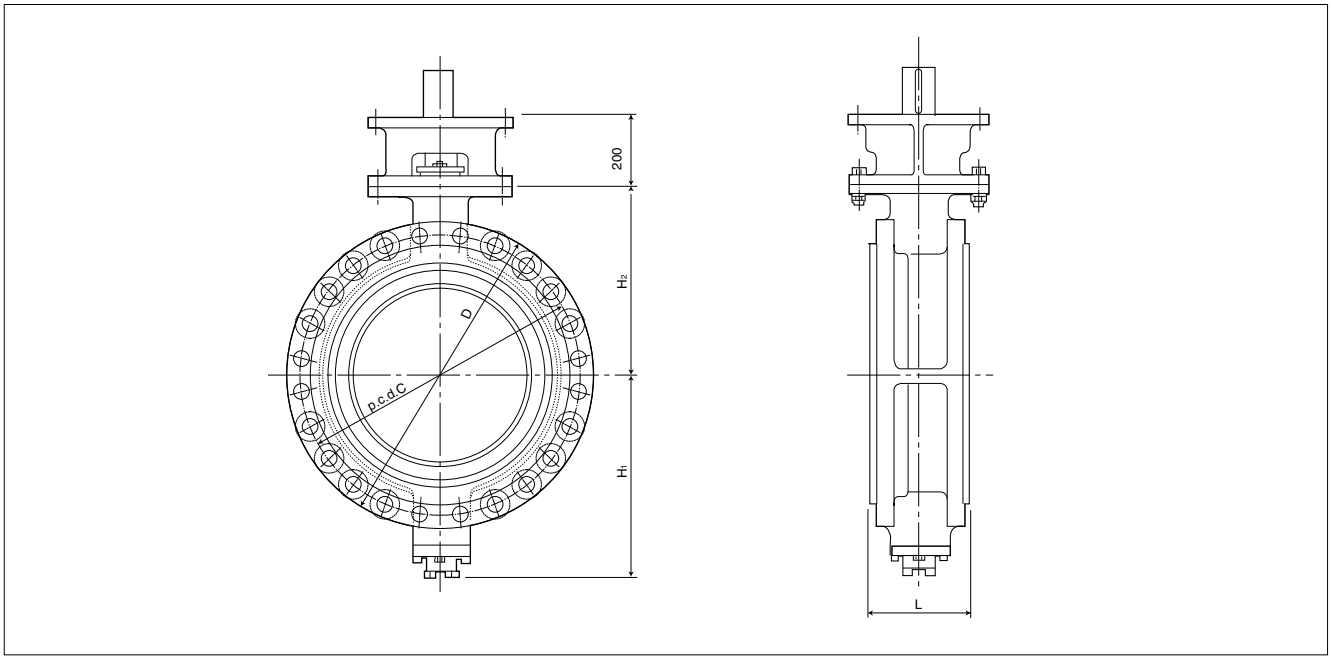

■Dimensions

Nominal size		Dimension (mm)				
mm	inch	H_2	H_1	D	L	C
650	26	505	535	845	254	780
750	30	543	613	984	305	914
900	36	648	727	1168	305	1086
1050	42	737	815	1346	305	1257
1200	48	819	905	1511	381	1422
1350	54	905	991	1683	381	1594
1500	60	991	1108	1854	381	1759
1650	66	1092	1192	2032	457	1930
1800	72	1175	1299	2197	457	2096
1950	78	1320	1387	2362	457	2254
2100	84	1404	1514	2534	457	2426
2250	90	1495	1610	2705	533	2597
2400	96	1610	1715	2877	610	2756

■ Use the gasket size that complies with flange standard when installing.
■ Body flange thickness may not comply with the standard. Consult with us.
■ 227P has two versions, AWWA type and general purpuse type.
■ Maximum flow velocity range should be 6m/sec in full open position and 9m/sec during emergencies or for short durations without frequent opening and closing.

227P 650-1,800mm (26-72") pressure classification
(Pipe inlet-pipe outlet)

25A, 25B —·—·—
75A, 75B ———
150A, 150B ·····

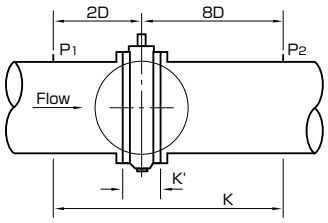

Flow coefficient based on K'

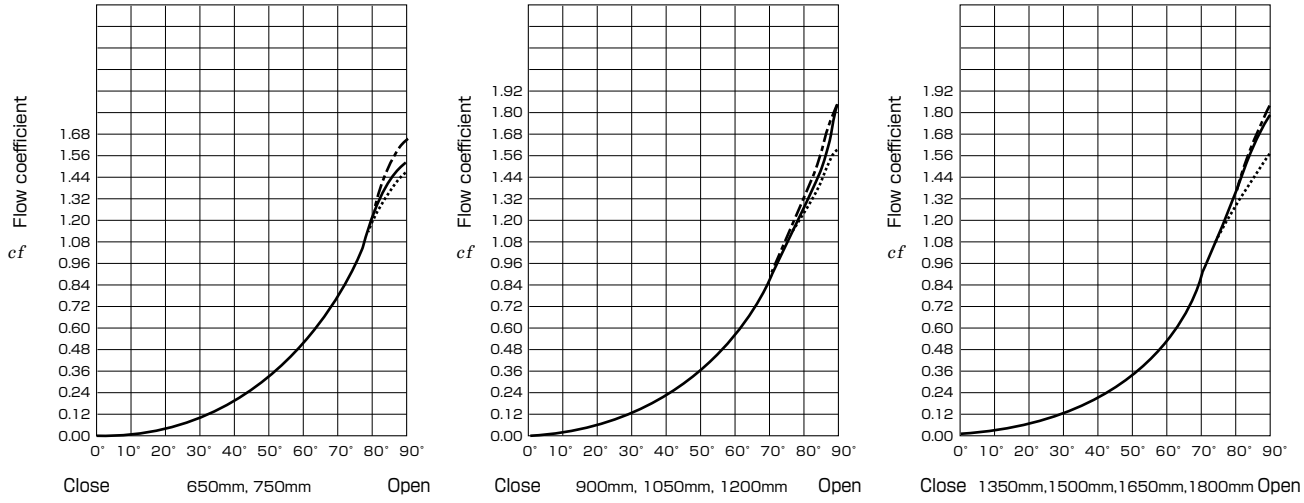

Flow coefficient based on K'

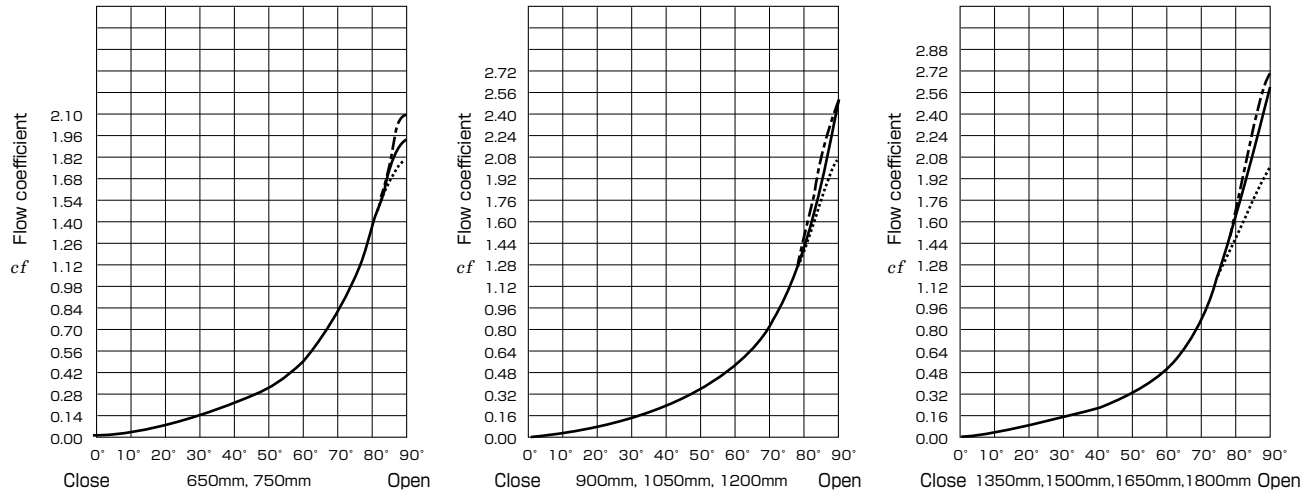

$$\Delta H = \frac{V^2}{cf^2 \cdot 2g}$$

ΔH= Head loss (feet of water)
V = Flow velocity through piping (feet／sec.)
cf = Flow coefficient for piping, whose length is 10 times that of the pipe diameter, and that for valve
cf = Flow coefficient of valve only
g = 32.17 feet/sec².

Cv value:
Cv =4294 $cf \times D^2$ D: Internal diameter of pipe (feet)

MKT Series
907H / 908H

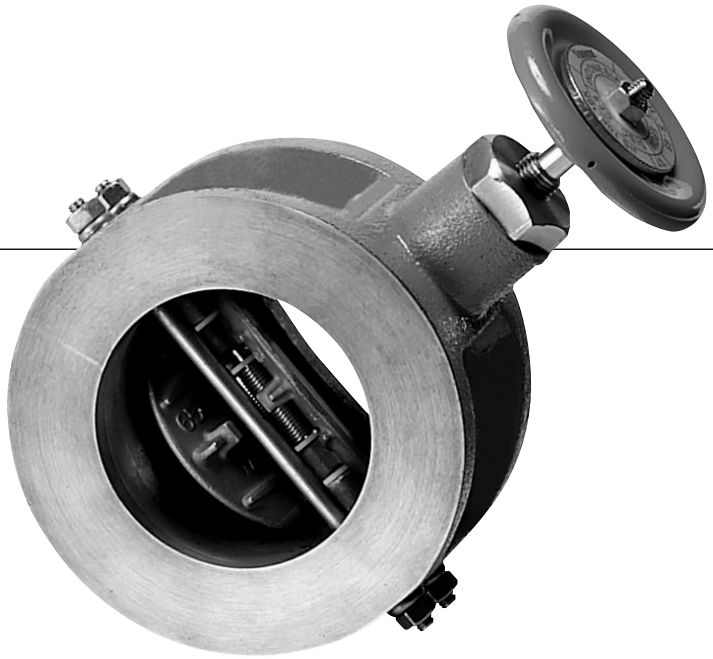

Prevention of chattering.
A new generation of check valves that reduce piping space and allow direct attachment of the pump.

Previous Product

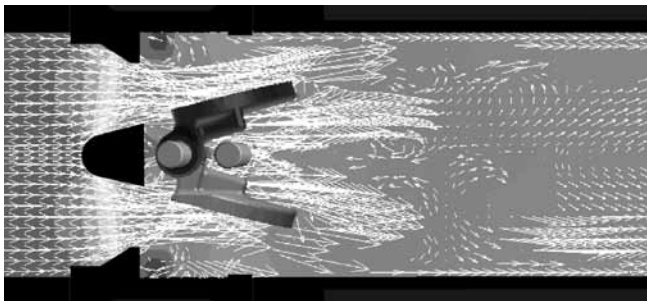

High pressure ← → Low pressure

MKT Series

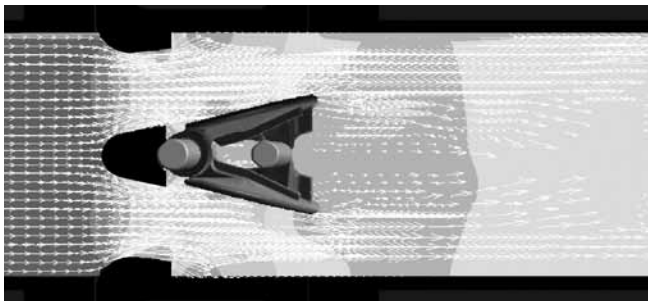

(Note) The colors indicate the pressure distribution. Red indicates high pressure and blue indicates low pressure. Flow speed is indicated by arrow size.

Based on fluid theory and vibration analysis, we have achieved a new mechanism that does not allow chattering even at high flow speeds and during fluid fluctuations.

Vibration Frequency Characteristics

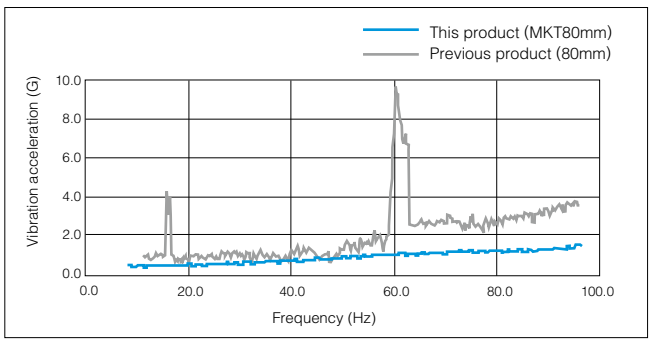

As indicated above, there are no vibration peaks at any of the frequencies and damage due to vibration is prevented.

Features and Benefits

Helps reduce installation space, resulting less cost and lesser time.

Over 80% of piping space reduced around pump

Designed for anti-vibration, that previouly found on the upstream side of check valves is no longer necessary and the piping space around the pump has been greatly reduced.

Direct pump installation possible

Designed for anti-vibration, the pump can now be installed directly. In fact, it achieved a smaller bore diameter that is 2 to 3 sizes smaller than previous one.

Prevents water hammer

The combination of a light, compact plate with a small moment of inertia and an optimized spring quickly stop the flow when the pump is turned off, preventing water hammer.

The figure below contains measurement data of pressure fluctuations when the pump is suddenly stopped. Compared to other models, the MKT series have a smaller pressure fluctuation amplitude on the downstream side which makes it effective in preventing water hammer.

MKT Series

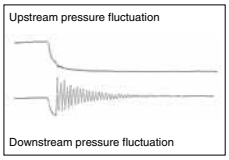

Lift check valve

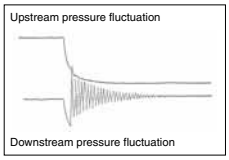

Swing check valve

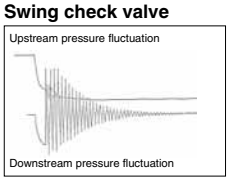

Suitable for all needs

Being able to handle water, steam, gases, and other fluids, all needs can be met. Also, use of a fluorocarbon resin sheet and stainless steel body allows chemicals, corrosive fluids and high temperature liquids (200 degrees C max.) to used which means a wide range of application environments can be convered.

Standard Specifications

		907H	908H
Valve design		Wafer-type double-plate check valve	
Valve nominal size ※1		50, 65, 80, 100, 125, 150, 200, 250, 300, 350, 400mm	50, 65, 80, 100, 125, 150, 200, 250, 300mm
Valve type		Check valve with bypass	
Applicable flange standard		JIS 10K, 16K, 20K, ASME B16.5 Class125/150	
Face-to-face dimensions		JV8-1 (stainless steel valves, wafer-type check valves), SAS358	
Max. working pressure		2.0MPa	
Allowed flow velocity		50-200mm : 0.5 m/s to 10 m/s, 250-300mm : 0.8 m/s to 10 m/s,	
Seat leakage		Tight shut	
Test pressure	Pressure resistance of body	3.0MPa	
	Valve seat leak	High-pressure test 2.2MPa(hydraulic)	
Working temperature range (without freezing)		NBR seat : 0 to 60 degrees C, *EPDM seat : 0 to 100 degrees C	
Standard materials	Main body	A536 Gr.65-45-12 (ductile iron)	A351 CF8 (stainless steel)
	Plate	A351 CF8 (stainless steel)	
	Pin	304 stainless steel	
	Spring	304 stainless steel	
	Seat ring ※2	NBR, *EPDM	
Pipe gasket		Required (please purchase a commercially available gasket that satisfies the flange standards)	
Coating		Resin baked finish (Munsell 2.5BG 6/12-Green)	No coating

※1 250mm and 300mm include rubber sleeves. Compared to the ones without rubber sleeves, loss of pressure increases 8˚/ around. 907H 350mm & 400mm can be made to order. Please contact us for the details.
※2 The rubber seat is vulcanized to the valve body.
* Never use an EPDM rubber seat ring if the valve is being used for oil or for a fluid containing even a slight amount of oil.

MKT Expanded view of components

■MKT Disc Expanded View/ Parts List

No.	Description	Q'ty	Remarks
1	Body	1	
2L	Left plate	1	
2R	Right plate	1	
3	Spring	1	200 mm, 250 mm, 300 mm: 2
4	Hinge pin	1	
5	Stop pin	1	
6	Seat	1	Vulcanized to body
7	Hexagon nut	4	
8	PTFE washer	2	
9	PTFE washer	4	
10	Eye bolt	1	Only 150mm and over
12	Handle wheel	1	
13	Lock bolt	1	
14	Stopper	1	
15	Hex.socket set screws	2	
16	O ring	1	
20	Spindle	1	
21	Hexagon nut	1	
23	Collar	1	
26	Seal washer	4	
29	Spring lock washer	1	
30	Bearing	4	
51	By-Pass seat	1	
99	Sleeve	1	Only 250, 300mm

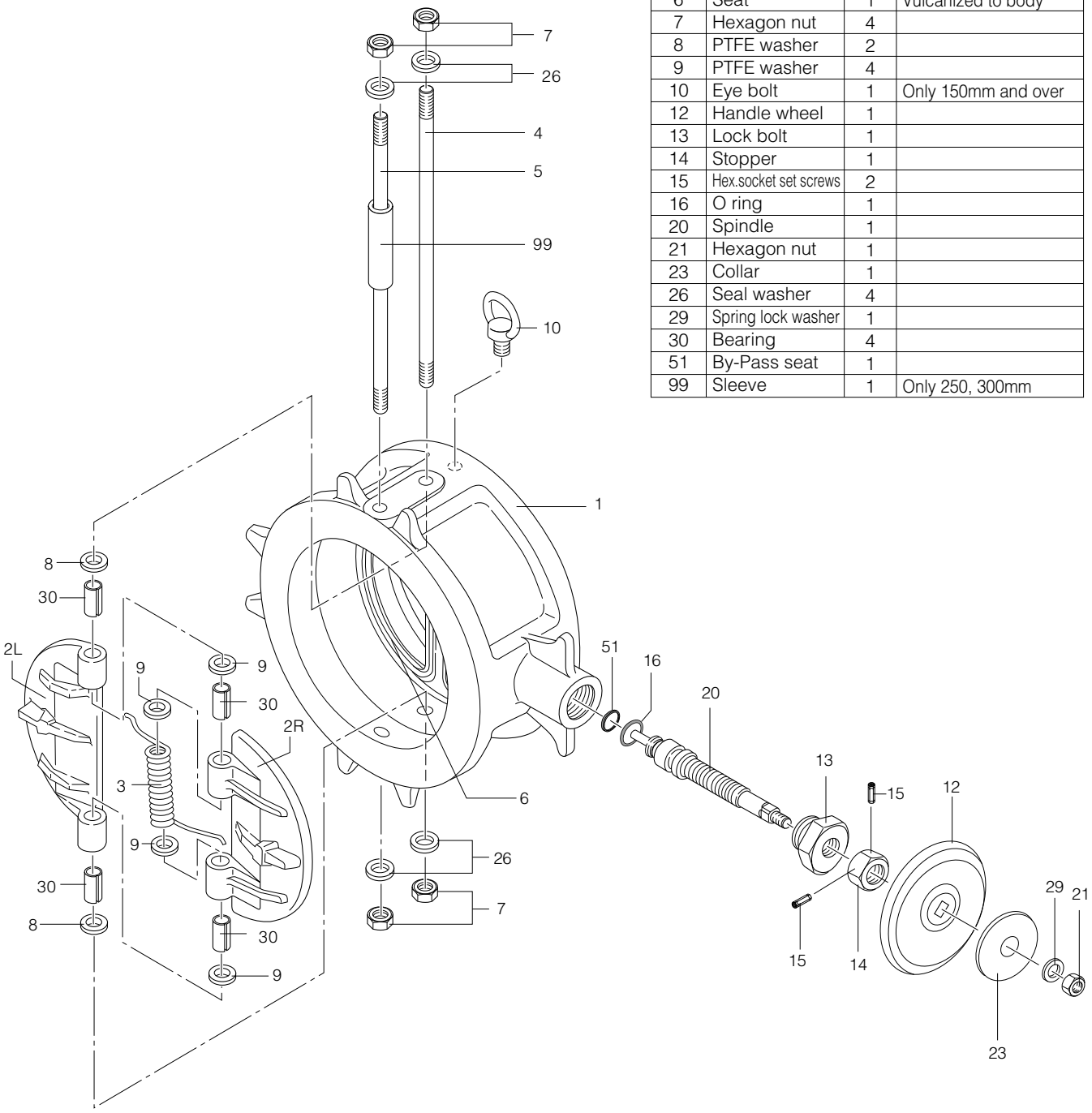

MKT Principal dimensions

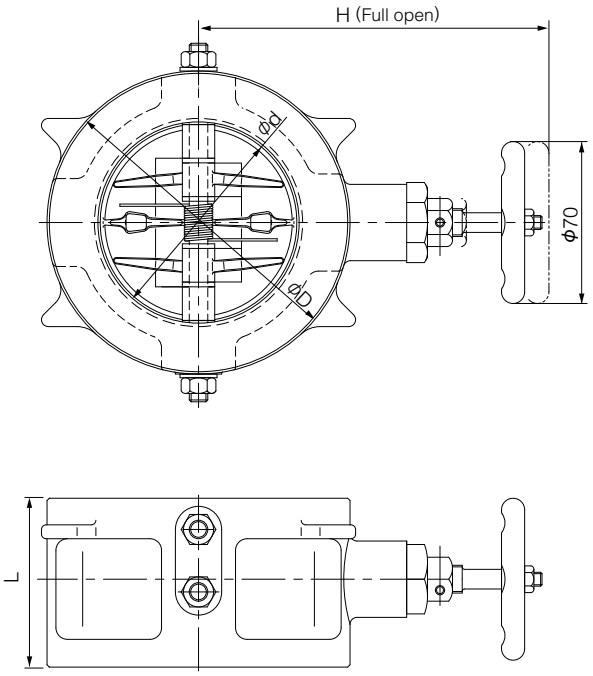

MKT Dimension

Nominal size		Dimension (mm)				Approx.Mass (kg)	
mm	inch	φd	φD	L	H	SCS	FCD
50	2	58	101	60	135	2.7	2.5
65	2 1/2	74	121	67	142	3.7	3.5
80	3	87	131	73	149	4.7	4.4
100	4	105	156	73	186	6.2	5.9
125	5	134	187	86	200	9.2	8.7
150	6	160	217	98	213	13.1	12.4
200	8	210	267	127	239	22.6	21.5
250	10	258	330	146	282	37.5	35.6
300	12	306	375	181	308	56.2	53.4

MKT Head loss vs. Flow

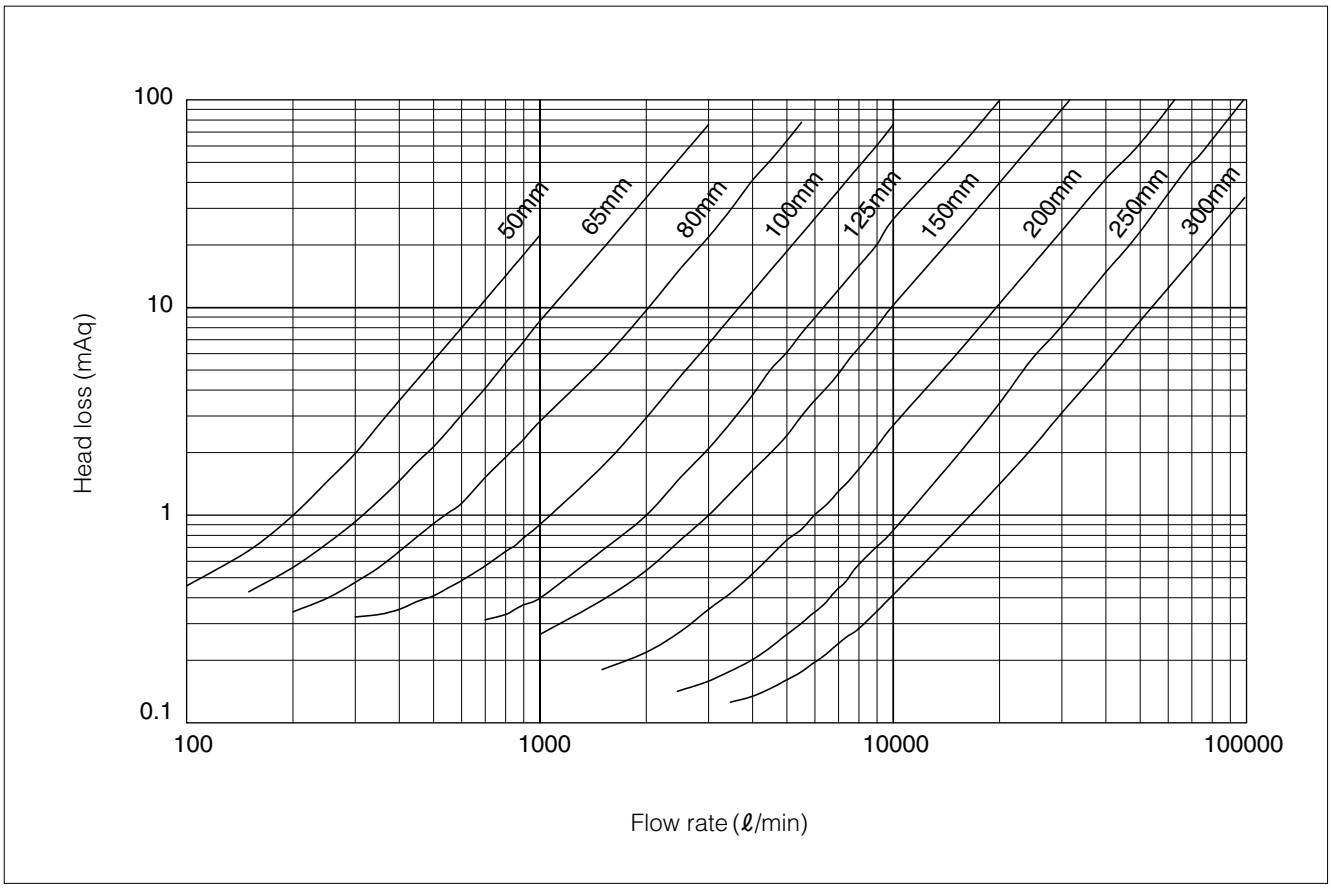

MKT Selection Criteria

Chart 1 Selection table by application and spring

	Application	Velocity	Flow Direction	Spring type
A	Fluid: Liquid and Installation: directly after 3D expanding pie or elbow※1	See Chart 2	Up flow 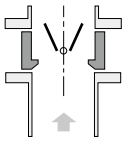	Low torque spring with rubber sleeve 200mm and smaller: Special selection (※2) 250mm and above: standard selection
B	Fluid Gas (air)	10m/s ～ 50m/s, and line and differential pressure 0.1MPa ～ 2MPa		
C	Fluid Liquid* *If installed directly after expanding pipe, it should not be more than 2D	0.5m/s ～ less than 2m/s		200mm and smaller: special selection (low torque spring) 250mm and above: standard selection
		2m/s ～ less than 10m/s		Standard torque spring
		2m/s ～ less than 10m/s	Horizontal pipe layout 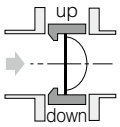	Standard torque spring
		Less than 5m/s Valve size less than 200mm	Down flow (※3) 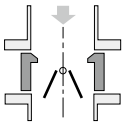	High torque spring

※1 Please do not install MKT directly after 4D or more expanding pipe due to possible abnormal noise, damage and leakage. Selection C can be applied if 5D or more expanding pipe.
※2 For valve size 200mm and smaller, pressure loss at full open will increase due to rubber sleeve.
※3 There is possible seat leakage by reverse flow in case of down flow.
※ Please contact us for application other than above application to avoid possible abnormal noise, damage, and leakage.
※ Selection C can be applied if MKT is installed before expanding pipe.

Chart 2 Minimum necessary average velocity for MKT installed after 3D expanding pipe and elbow

Valve size	50, 65, 80, 100mm	125,150, 200mm	250, 300mm
Minimum necessary velocity	1.2m/s	1.6m/s	2.2m/s
Maximum allowable velocity	10m/s	10m/s	10m/s

MKT Applicable pipe list in case of A

Nominal size		SGP	Sch20	Sch40	Sch10S	Sch20S
mm	inch					
50	2	○	○	○	○	○
65	2 1/2	○	○	○	○	○
80	3	○	○	○	○	○
100	4	○	○	○	○	○
125	5	○	○	○	○	○
150	6	○	○	○	○	○
200	8	○	○	○	○	○
250	10	○	○	○	○	○
300	12	○	○	○	○	○

MKT Applicable pipe list in case of B

Nominal size		SGP	Sch20	Sch40	Sch10S	Sch20S
mm	inch					
50	2	○	○	○	○	○
65	2 1/2	○	○	○	○	○
80	3	○	○	○	○	○
100	4	○	○	○	○	○
125	5	○	○	○	○	○
150	6	○	○	○	○	○
200	8	○	○	○	○	○
250	10	○	○	○	○	○
300	12	○	○	○	○	○

Remark: ○: Installation possible, —: No standard

Minimum internal diameters of piping (mm)

Nominal size		Minimum internal diameters of piping (mm)
mm	inch	
50	2	35.0
65	2 1/2	45.5
80	3	56.0
100	4	80.6
125	5	98.2
150	6	122.1
200	8	156.8
250	10	204.7
300	12	222.9

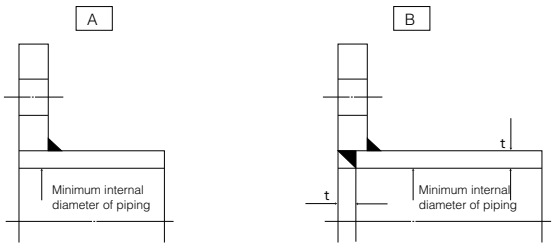

MKT Cracking Pressure (Opening Pressure)

Minimum required pressure difference for flowing in forward direction

Nominal size		CV value	Standard torque spring		Low torque spring	
mm	inch		mmAq	MPa	mmAq	MPa
50	2	46.0	116	0.00114	12	0.00012
65	2 1/2	74.5	113	0.00111	13	0.00013
80	3	138	160	0.00157	22	0.00022
100	4	251	82	0.00080	16	0.00016
125	5	435	49	0.00048	12	0.00012
150	6	685	58	0.00057	15	0.00015
200	8	1340	79	0.00077	16	0.00016
250	10	2330	59	0.00058	12	0.00012
300	12	3760	50	0.00049	10	0.00010

MKT Piping Bolt and Nut Sizes

Nominal size		JIS10K	JIS16K	JIS20K	ASME B16.5 Class150
mm	inch				
50	2	4-M16×140×35	8-M16×140×35	8-M16×140×35	4-U5/8-11×145×40
65	2 1/2	4-M16×150×40	8-M16×150×40	8-M16×150×40	4-U5/8-11×160×40
80	3	8-M16×160×40	8-M20×175×50	8-M20×175×50	4-U5/8-11×170×40
100	4	8-M16×160×40	8-M20×175×50	8-M20×175×50	8-U5/8-11×170×40
125	5	8-M20×180×50	8-M22×200×50	8-M22×200×50	8-U3/4-10×190×50
150	6	8-M20×200×50	12-M22×215×50	12-M22×215×50	8-U3/4-10×205×50
200	8	12-M20×230×50	12-M22×240×50	12-M22×240×50	8-U3/4-10×240×50
250	10	12-M22×260×50	12-M24×275×60	12-M24×275×60	12-U7/8-9×265×55
300	12	16-M22×300×50	16-M24×315×60	16-M24×315×60	12-U7/8-9×305×55

●The bolt lengths are in accordance with JIS and thickness of steel flanges.

Remark: *Use a hexagon nut with 80% threading.
*Material: "SS400" (Unichrome plating)

Example

Long bolts: 16 - M22 × 300 × 45
N M L S

Long bolts and nuts

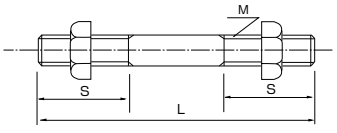

Bata-Check 903C

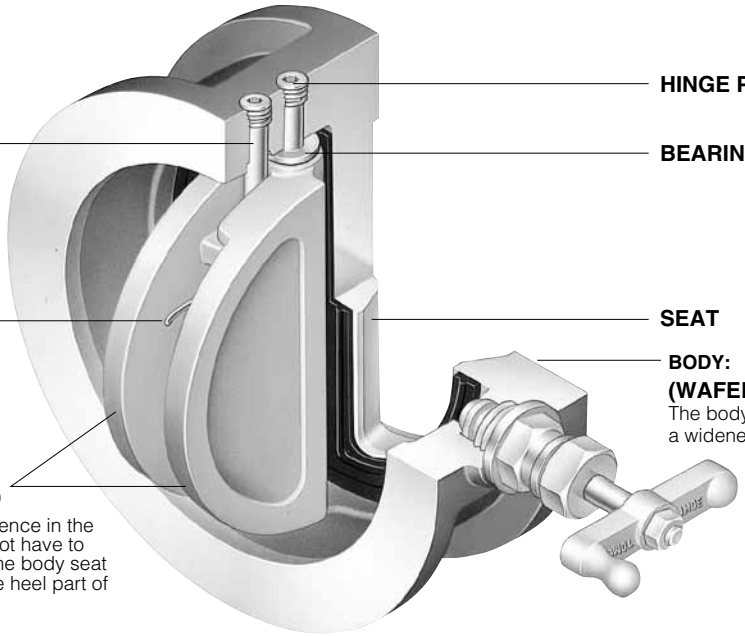

Outstanding Features

1. Lightweight and Compact

Lightweight and compact design that have never been realized in conventional sewing check valves.

2. Alleviation from Water Hammer

Instant response by spring-biased dual plates that prevent water hammer.

3. Tight Sealing

Shock-resistance and tight sealing effect ensured by resilient seat.

4. Free Installation Direction

Installed either horizontally or vertically in the piping.

5. Low Head Loss

Opening area is expanded to the allowable limit and head loss of flow passage is less compared to similar dual type check valves.

Comparison Between Wing Check Valve and Bata Check

Swing Check Valve

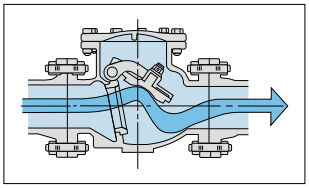

1. Plate stroke is long.
2. Face to Face dimension is long.
3. Slow response
4. Difficult to install vertically.

Bata Check (wafer check valve)

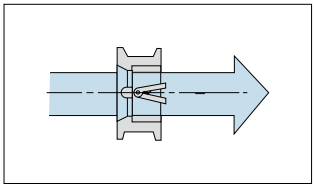

1. Plate stroke is short
2. Lightweight and compact due to wafer type body.
   F. to F. dimension is reduced to about 1/4 and the weight is about 1/5.
3. Maintenance-free due to simple structure.



Standard Specifications

Size	50mm to 300mm
Face to face	TOMOE dimension
Flange accommodation	JIS 10kgf/cm², ANSI 125 Lbs
Max working pressure	0.98 Mpa
Temperature	Min.−20 degrees C, Max. +80 degrees C (NBR) +120 degrees C (EPDM)
Test pressure	Body hydrostatic test : 1.47 Mpa Seat hydrostatic test : 1.08 Mpa

Spring Selection Criteria

Spring type	Bata check conditions of use 1.0 MPa type.
Low torque spring	Parallel piping in which gas (compressible liquid) or liquid line pressure is between 0.05 and 0.10 MPa or up-flow line in which fluid flows from bottom to top.
Standard torque spring	Parallel piping in which liquid line pressure is between 0.1 and 0.7 MPa or up-flow line in which fluid flows from bottom to top.
High torque spring	Liquid line pressure is 0.7 MPa or higher or down-flow lines in which fluid flows from top to bottom. ***Please use a high torque spring in the pump outlet regardless of the pressure.**

903C Principal Dimensions

Nominal size		Dimension (mm)					Approx. Weight (kg)
mm	inch	φd	φD	φd1	L	H	
50	2	62	101	42	56	157	2.4
65	2 1/2	73	121	48	56	162	3.4
80	3	89	131	63	60	170	3.9
100	4	115	156	82	66	184	5.5
125	5	142	187	110	70	200	8
150	6	168	217	128	76	213	10
200	8	220	267	174	95	239	17
250	10	273	330	218	108	286	28
300	12	324	375	260	144	309	44

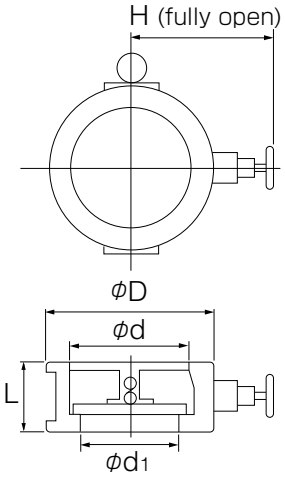

Head Loss vs. Flow

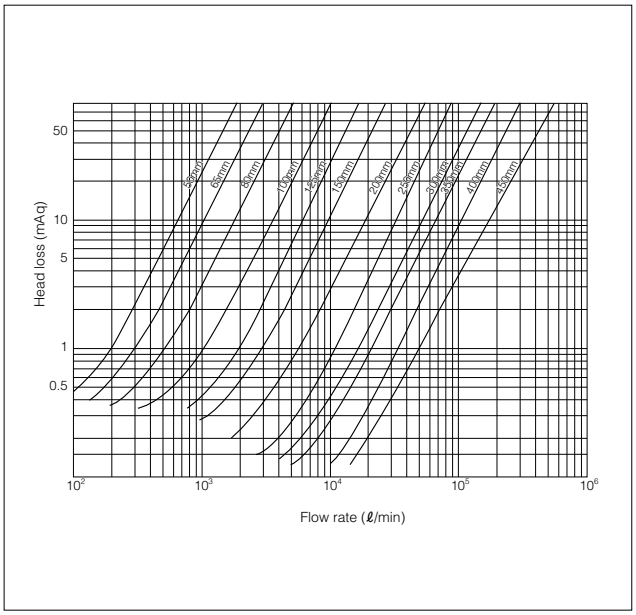

MEMO

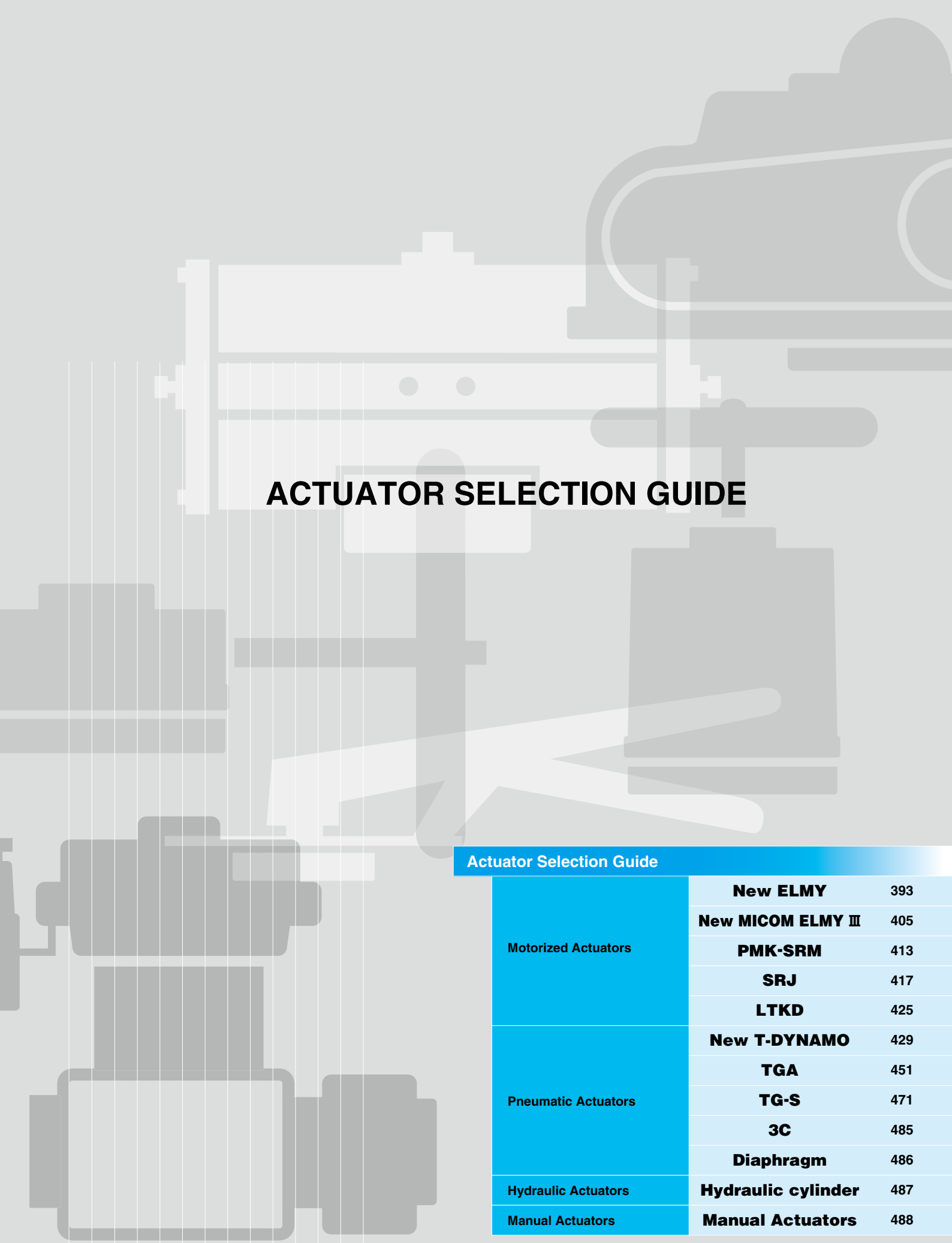

ACTUATOR SELECTION GUIDE

Actuator Selection Guide

Motorized Actuators	New ELMY	393
	New MICOM ELMY Ⅲ	405
	PMK-SRM	413
	SRJ	417
	LTKD	425
Pneumatic Actuators	New T-DYNAMO	429
	TGA	451
	TG-S	471
	3C	485
	Diaphragm	486
Hydraulic Actuators	Hydraulic cylinder	487
Manual Actuators	Manual Actuators	488

Compact Motorized Actuator

New ELMY®

Using the superior characteristics of the best selling ELMY butterfly valve actuator, we developed an improved successor, the New ELMY®. With a replaceable control circuit board, tough metal gears, new limit cam mechanism, a new clutch mechanism, and an improved watertight design, the New ELMY® actuator is even better than before.

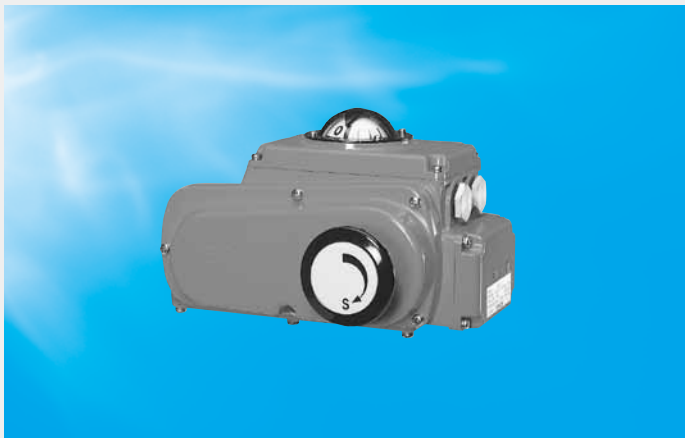

■Features

- ●Circuit board is easily replaceable to meet different requirements.
- ●New adjustable limit switch cam plate.
- ●Waterproof design protects against rain water or condensation
- ●Declutchable handwheel for ease of operation and maximum safety.
- ●High output torque and compact in size.

New ELMY Structure figure

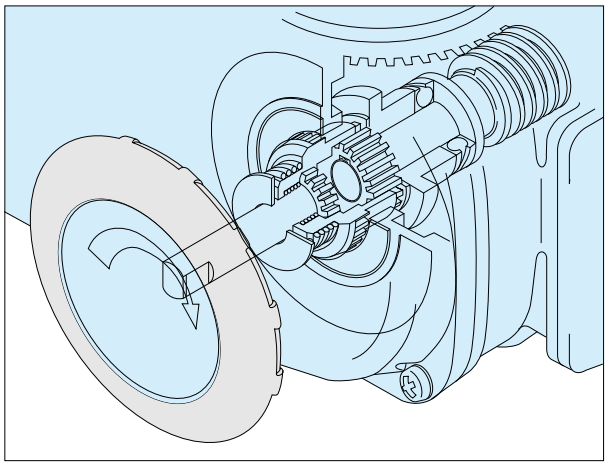

Types 1 to 4

New ELMY Wiring diagrams Standard (With extra position limit switch non-voltage)

Type 00

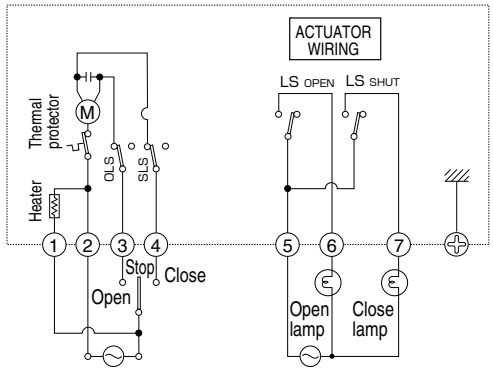

Type 0 to 4

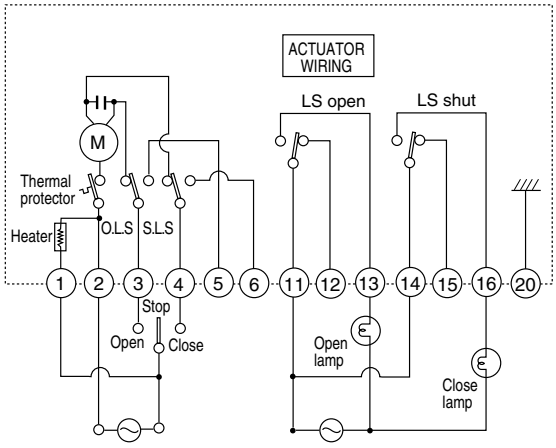

New ELMY Specifications							
Type	Type 00	Type 0	Type 1	Type 2	Type 2.5	Type 3	Type 4
Output torque (N · m)	25	70	98	196	333	981	2000
Power source (V)	AC 100V, 200V, 220V		AC 100V, 120V, 200V, 220V, 240V, 50/60Hz※1				
Motor capacity (W)	8		20	30		90	
Travel time (50/60Hz) (sec)	10/8	25/20 (180/150)※2			37/30 (260/210)※2	55/50 (500/440)※2	125/105 (1100/900)※2
Electric power consumption (only as a rough standard)	60W		100W	160W		200W	
Rating (min)	30						
Insulation	Class E						
Type of motor and its protective device	Reversible motor with built-in thermal protector						
Space heater	Option	Supplied under the standard specifications					
Position limit switch	One each at fully opened and closedpositions, contact capacity: AC250V-5A(Can be used with minimum load down to 100mA.)	One each at fully opened and closed positions, contact capacity: AC250V-10A (Can be used with minimum load down to 100mA.)					
Torque limit switch	None						
Mechanical limit stop	End of travel positioning bolt built-in						
Conduit connections	G 1/2 (PF 1/2)1 ports	G 1/2 (PF 1/2) 2 ports					
Enclosure	JIS C 0920 (IP 65), Class 5, dust and water-jet proof type						
Manual operation	Detachable handle		Declutchable handwheel				
Number of turns for handle/handwheel	7.5 turns	6.7 turns	16.5 turns				
Working temperature range	−10 to 60 degreesC						
Storage temperature range	−30 to 80 degreesC						
Paint finish	Epoxy-melanin baked with Munsell 2.5 BG 6/12						
Options	1) Space heater	1) Potentiometer: 135Ω and 500Ω 2) Intermediate limit switch (no voltage) 3) Extra position limit switch contact capacity for minute-load: 30V-100mA (Can be used with minimum load down to 1mA.) 4) Servounit※1 (DC 4−20mA, DC1−5V, 0−10V) 5) Speed controller unit※1					

※1. Servounit, speed controller unit not support 240V, space heater as an option.
※2. With speed controller unit

New ELMY Tabel Actuator Selection

Nominal size (mm)	700Z	700G 705G 704G	700S 720F	731P	732P	847T 846T	508V
40	Type 00	Type 00	——	——	——	——	——
50			Type 0	Type 00	Type 00	Type 0	Type 0
65		Type 0		Type 0	Type 0		——
80	Type 0					Type 1	Type 0
100		Type 1	Type 1	Type 1	Type 1		Type 1
125	Type 1	Type 2	Type 2	Type 2	Type 2	Type 2	——
150	Type 2						Type 2.5
200		Type 2.5	Type 2.5	Type 2.5	Type 3	Type 2.5	
250	Type 2.5		Type 3	Type 3		Type 3	Type 3
300	Type 3	Type 3					
350				Type 4	Type 4		
400							Type 4
450		Type 4	Type 4				
500							

※ For on-off Selection

New ELMY Dimensions

Type 00 and 0

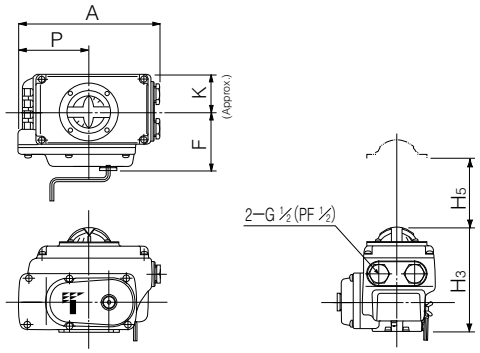

Types 2 and 2.5

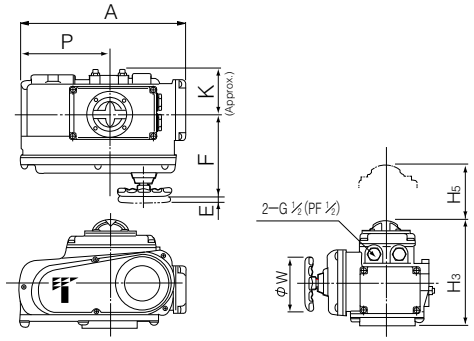

Type 1

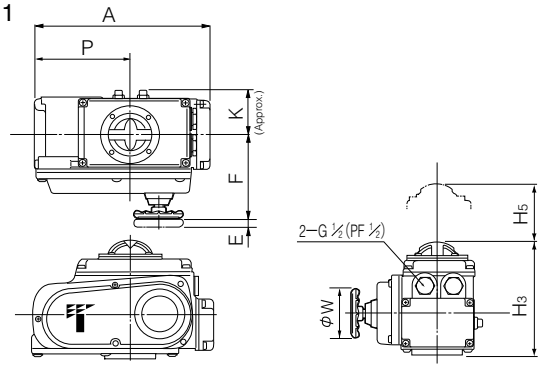

Types 3 and 4

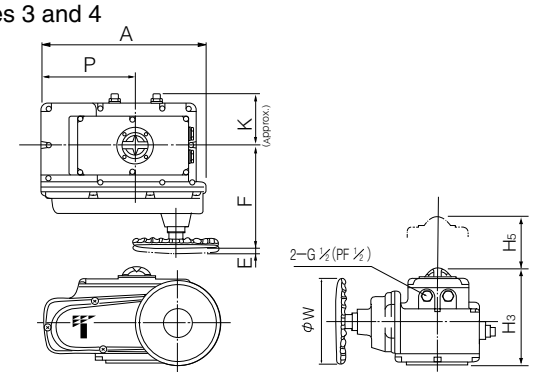

New ELMY Dimensions / Weight

Motor type	Dimension (mm)								Approx. Weight (kg)
	H_3	H_5	P	A	E	F	K	ϕW	
Type 00	100	100	84	161	–	58	43	–	2.1
Type 0	150(185)	100	100	202	–	85	54	–	4.2
Type 1	165(191)	100	138	252	12	126	65	70	6.4
Type 2	198(224)	100	167	310	14	154	85	100	11.2
Type 2.5	198(224)	100	167	310	14	154	85	100	12.8
Type 3	230(255)	100	223	388	23	243	136	200	23.2
Type 4	230(255)	100	223	388	23	246	136	280	28.3

( ): Demension with servounit

New ELMY Mounting details

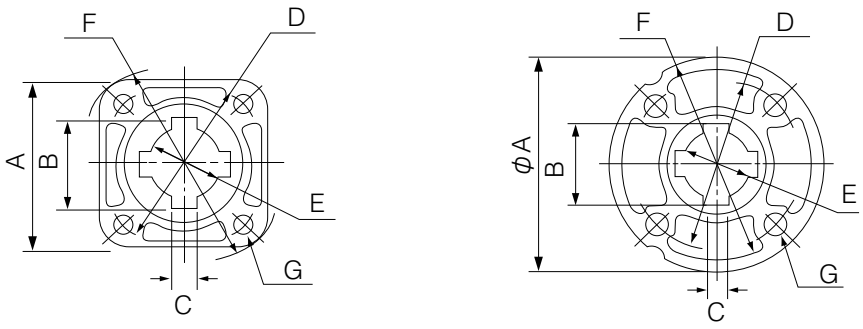

New ELMY Mounting flange details

Actuator type		A	B	C	D (Φ)	E (Φ)	F (Φ)	G			
								Qty	M	P	Dep.
Type 00	ISO F05/F07	□70	–	–	50/70	□12	90	4	8/6	1.25/1.0	13/10
Type 0	ISO F07	□70	–	–	70	□12	90	4	8	1.25	13
Type 1	ISO F07	□70	34.6	8	70	28	90	4	8	1.25	13
	Tomoe Original	Φ100	34.6	8	80	28	100	4	10	1.5	12
Type 2	ISO F10	□102	52.6	14	102	45	125	4	10	1.5	15
	Tomoe Original	Φ125	52.6	14	95	45	125	4	12	1.75	15
Type 2.5	ISO F10	□102	52.6	14	102	45	125	4	10	1.5	15
	ISO F12	□125	52.6	14	125	45	155	4	12	1.75	20
	Tomoe Original	Φ125	52.6	14	95	45	125	4	12	1.75	15
Type 3	ISO F10	□140	57.6	14	102	50	175	4	10	1.5	15
	ISO F12	□140	57.6	14	125	50	175	4	12	1.75	18
		□140	38.6	10	140	32	175	4	12	1.75	18
	ISO F14	□140	46.6	12	140	40	175	4	16	2.0	24
	Tomoe Original	Φ200	43.1	10	125	35.5	200	4	12	1.75	24
		Φ200	47.6	10	170	40	200	4	16	2.0	30
Type 4	ISO F12	□140	57.6	14	125	50.0	175	4	12	1.75	18
	ISO F14	□140	46.6	12	140	40.0	175	4	16	2.0	24
		□140	53.6	14	140	46.0	175	4	16	2.0	24
		□140	57.6	14	140	50.0	175	4	16	2.0	24
	Tomoe Original	Φ200	47.6	10	170	40.0	200	4	16	2.0	30
		Φ200	54.6	12	170	47.0	200	4	16	2.0	30

New ELMY Terminal board connection diagram（Type 00）

Notes:
1. The FG terminal should be grounded.
2. If a space heater (option) is used, the round terminal should be connected to terminals 1, 2, and 3.
3. The power sources for the control units are the same for both 100V and 200V series, however the actuator motors differ depending on the power source.

   Terminal block screw size: M3 (with angular washer)

Wiring diagram

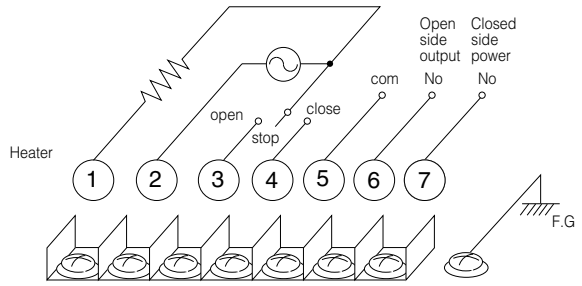

New ELMY Terminal board connection diagram（Type 0 to 4）

(1) FG contact should be grounded.
(2) If space heater (option) is used, round contact should be connected to contacts 1 and 2.
(3) Power source for control unit of 100V series and 200V series is same, but power source for actuator motor is not.

Terminal block screw size: M3 (with washer)

Wirng diagram

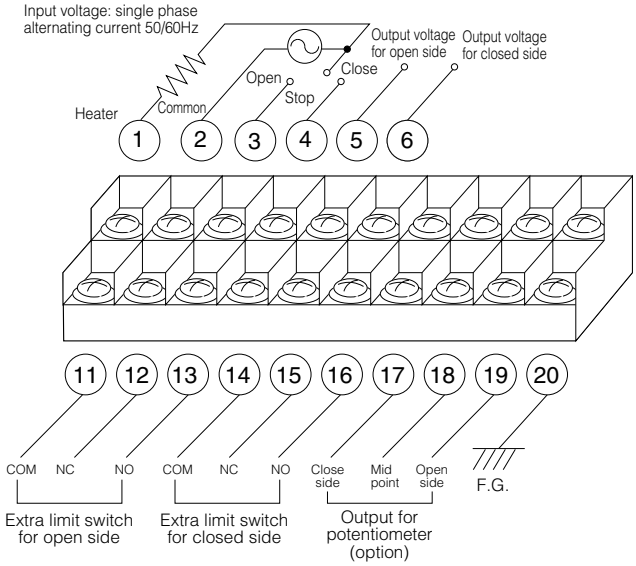

New ELMY Terminal board (Type 0 to 4)

Terminal No.	Specification	Standard with extra position limit switches	With intermediate limit switches	With a potentiometer and extra position limit switches	With a potentiometer and intermediate limit switches
①	Heater	○	○	○	○
②	COMMON	○	○	○	○
③	Open switch	○	○	○	○
④	Close switch	○	○	○	○
⑤	Open lamp	○	○	○	○
⑥	Close lamp	○	○	○	○
⑪	Extra position limit switch, open end (intermediate limit switch 1) COMMON	○	○	○	○
⑫	(intermediate limit switch 1) NC	○	○	○	○
⑬	(intermediate limit switch 1) NO	○	○	○	○
⑭	Extra position limit switch, close end (intermediate limit switch 2) COMMON	○	○	○	○
⑮	(intermediate limit switch 2) NC	○	○	○	○
⑯	(intermediate limit switch 2) NO	○	○	○	○
⑰	Potentiometer	—	—	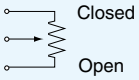	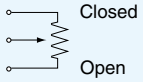
⑱	Potentiometer	—	—		
⑲	Potentiometer	—	—		
⑳	Earth (F.G.)	○	○	○	○

7, 8 and 9 are out of use.
○: wired
— : not wired

New ELMY Contacts

	Terminal No.	Connection	Capacity
Contact output	⑦(COM)	Common with No. 8 and 9	AC250V-10A
	⑧(OPEN)	Connect with No. 7 at open position	
	⑨(CLOSE)	Connect with No. 7 at close position	

New ELMY Recommended fuse and non-fuse breaker

1. On-off use

with extra limit switch (as standard)
with intermediate limit switch (as option)

Type	Power source and frequency	Recommended capacity for fuse	Recommended capacity for non-fuse breaker
0, 1	100V/110V(50Hz/60Hz)	2A	2A
	200V/220V(50Hz/60Hz)	1A	1A
2, 2.5	100V/110V(50Hz/60Hz)	3A	3A
	200V/220V(50Hz/60Hz)	2A	2A
3, 4	100V/110V(50Hz/60Hz)	7A	7A
	200V/220V(50Hz/60Hz)	5A	5A

2. Modulating use

with speed control unit (as option)
with servo unit (as option)

Type	Power source and frequency	Recommended capacity for fuse	Recommended capacity for non-fuse breaker
0, 1	100V/110V(50Hz/60Hz)	3A	3A
	200V/220V(50Hz/60Hz)	2A	2A
2, 2.5	100V/110V(50Hz/60Hz)	5A	5A
	200V/220V(50Hz/60Hz)	3A	3A
3, 4	100V/110V(50Hz/60Hz)	10A	10A
	200V/220V(50Hz/60Hz)	7A	7A

New ELMY Wiring diagrams (Control options) (Type 0 to 4)

Standard

With extra position limit switch (non-voltage)

- **Purpose**
  To send non-voltage full-open and full-closed signals by switching on and off.

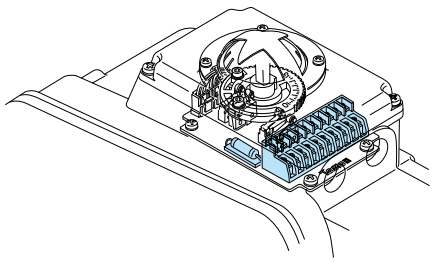

Limit switch contact development

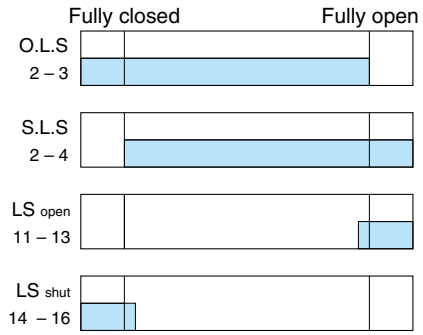

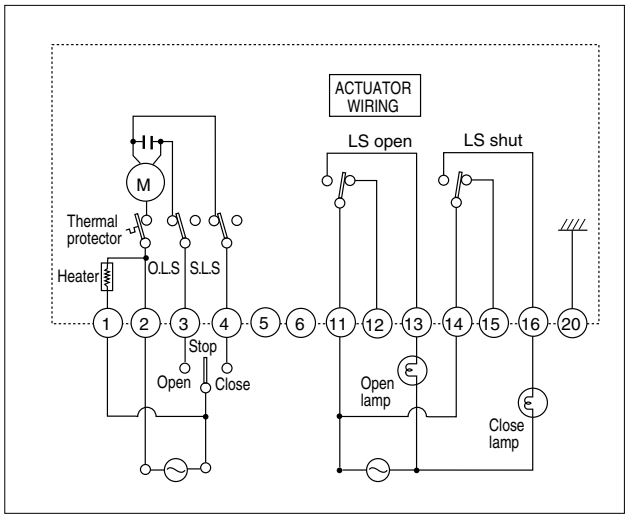

Notes
1. Do not use a switch for two or more motor actuators, as the voltage will be transmitted to the other motor through the capacitor and cause malfunction.
2. Extra limit switches work 2 to 3% ahead of each opening and closing position of the valve. Therefore, if you stop the valve using signals from an extra limit switch, leakage may occur.
3. The contact capacity of the extra limit switch is 250 VAC-10 A (min. 0.1 A). For anything below this contact capacity (1 mA to 100 mA, 5 to 30 V), please use specifications for minute loads.

With intermediate limit switch

- **Purpose**
  To send intermediate open and close signals by switching on and off, and to stop the valve at intermediate positions.
- **Options**
  Intermediate limit switches (two, non-voltage)

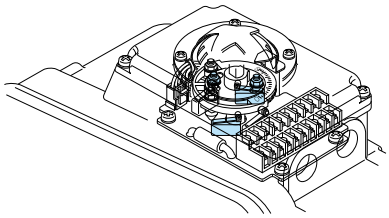

Limit switch contact development

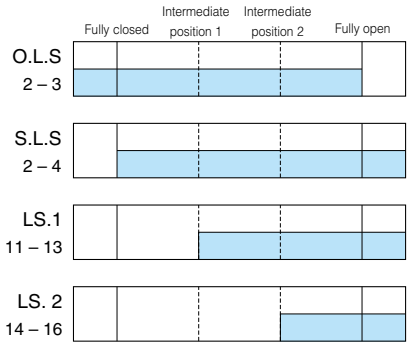

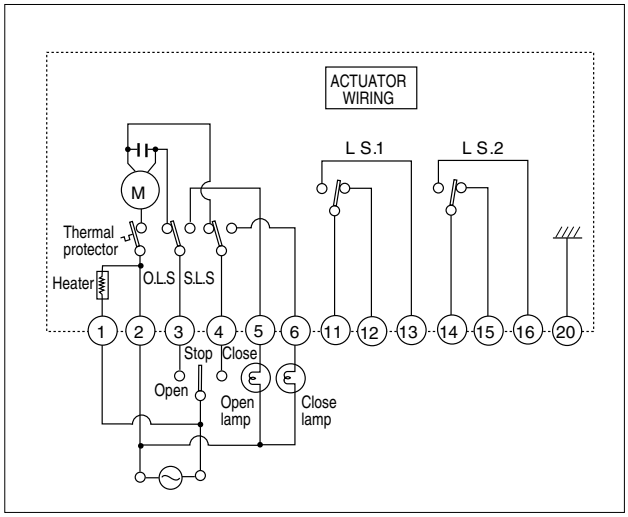

Notes
1. Do not use a switch for two or more motor actuators, as the voltage will be transmitted to the other motor through the capacitor and cause malfunction.
2. The contact capacity of the extra limit switch is 250 VAC-10 A (min. 0.1 A). For anything below this contact capacity (1 mA to 100 mA, 5 to 30 V), please use specifications for minute loads.

With potentiometer and extra position limit switch (non-voltage)

- **Purpose**
  To control valve opening by resistance variations and send non-voltage full-open and full-closed signals by switching on and off.
- **Options**
  135Ω or 500Ω potentiometer

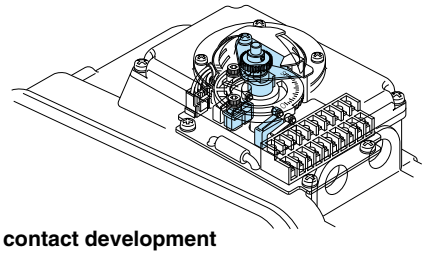

Limit switch contact development

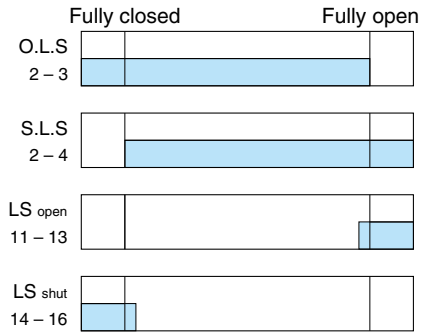

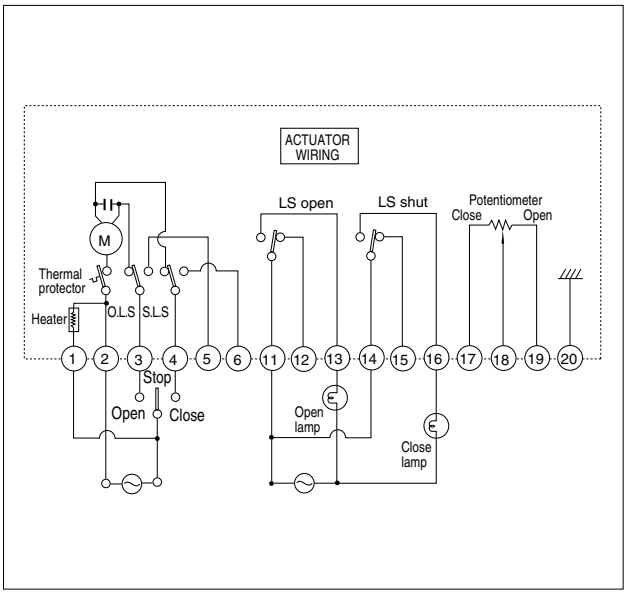

Notes
1. Do not use a switch for two or more of motor actuators, as the voltage will be transmitted to the other motor through the capacitor and cause malfunction.
2. Extra limit switches work 2 to 3% ahead of each opening and closing position of the valve. Therefore, if you stop the valve using signals from an extra limit switch, leakage may occur.
3. The contact capacity of the extra limit switch is 250 VAC-10 A (min. 0.1 A). For anything below this contact capacity (1 mA to 100 mA, 5 to 30 V), please use specifications for minute loads.

With thermal output

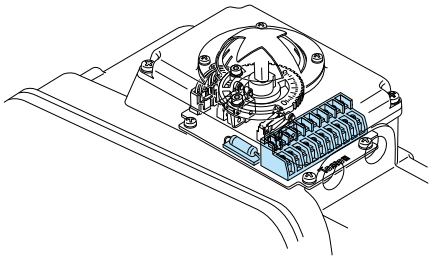

Limit switch contact development

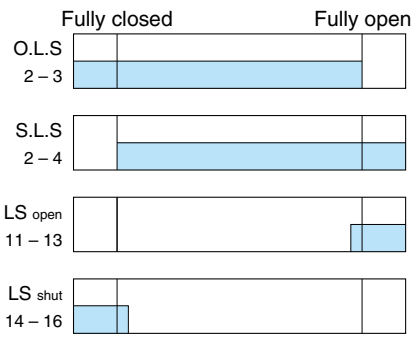

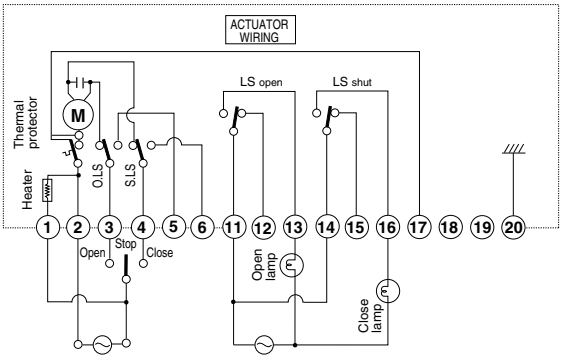

Notes
1. Outputs when thermal operation shall be “b” contacts.
2. Do not use a switch for two or more motor actuators, as the voltage will be transmitted to the other motor through the capacitor and cause malfunction.
3. Extra limit switche work 2 to 3% ahead of each opening and closing position of the valve. Therefore, if you stop the valve using signals from an extra limit switch, leakage may occur.
4. The contact capacity of the extra limit switch is 250 VAC-10 A (min. 0.1 A). For anything below this contact capacity (1 mA to 100 mA, 5 to 30 V), please use specifications for minute loads.

New ELMY Wiring diagrams (Control options) (Type 0 to 4)

With speed controller unit

●Purpose
Set the valve open and close time.

●Options
135Ω or 500Ω potentionmeter, heater

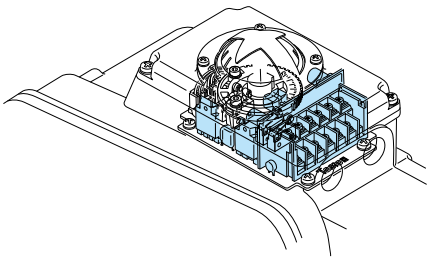

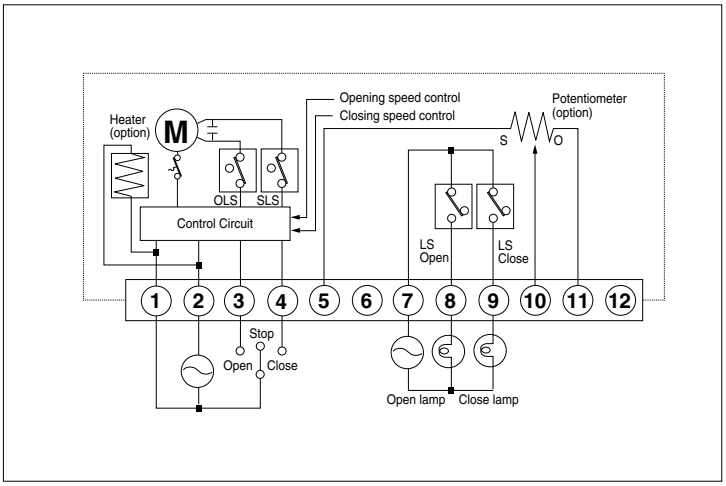

Notes
1. Do not use a switch for two or more motor actuators, as the voltage will be transmitted to the other motor through the capacitor and cause malfunction.
2. Extra limit switches work 2 to 3% ahead of each opening and closing position of the valve. Therefore, if you stop the valve using signals from an extra limit switch, leakage may occur.

Type		0, 1, 2	2.5	3	4
Opening degree		0 to 90 degrees C			
Open and close time	50Hz	25／180sec	37／260sec	55／500sec	125／1100sec
	60Hz	20／150sec	30／210sec	50／440sec	105／900sec
Adjustment method		Adjustment trimmer			

With servo unit

Potentiometer and extra position limit switch (non-voltage)

●Purpose
Control the valve opening degree proportionally
Input signal : 4 to 20mA DC (1 to 5V DC, 0 to 10V DC as option)
Output signal : 4 to 20mA DC

For full-open / full-close : contact output

●Option
Servo unit 500Ω potentiometer

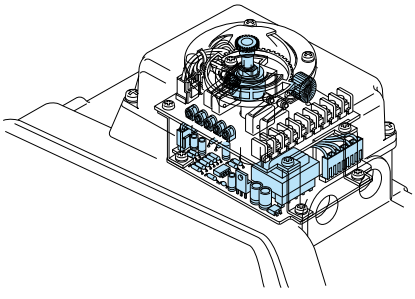

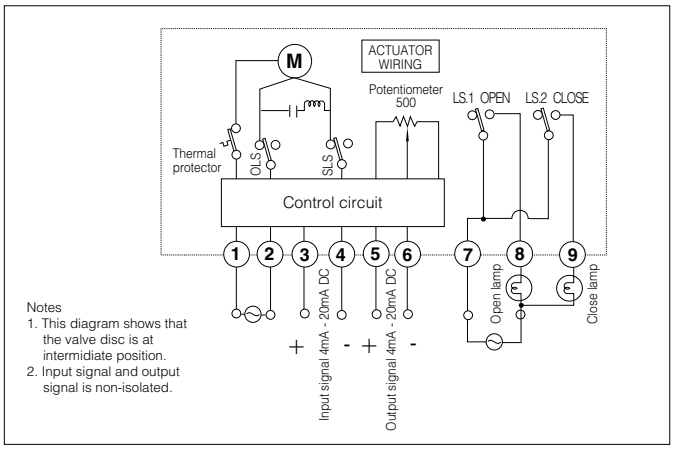

Notes
1. This diagram shows that the valve disc is at intermidiate position.
2. Input signal and output signal is non-isolated.

Notes
1. The contact capacity of the extra limit switch is 250 VAC-10 A (min. 0.1 A). For anything below this contact capacity (1 mA to 100 mA, 5 to 30 V), please use specifications for minute loads.

Parts list for New ELMY (Type 0 to 4)

With servo unit inside of types 0, 1, 2 and 2.5

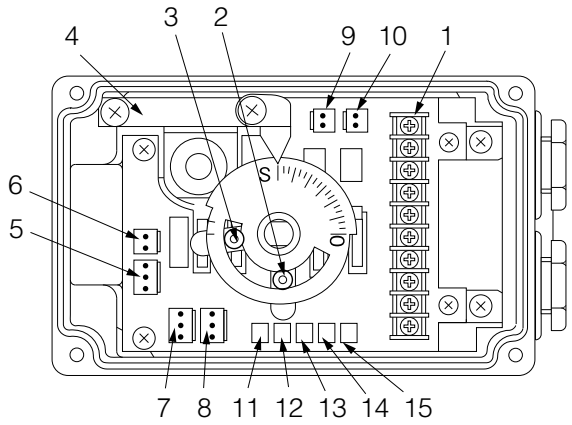

1	Terminal	9	RA: wiring connector
2	Dog for open position	10	DA: wiring connector
3	Dog for closed position	11	Trimmer for hysterisis adjustment
4	Potentiometer	12	Trimmer for zero adjustment
5	Connector for motor	13	Trimmer for span adjustment
6	Connector for motor capacitor	14	Trimmer for output zero adjustment
7	RA: connector for potentiometer	15	Trimmer for output span adjustment
8	DA: connector for potentiometer		

Remarks: When Z1 is adjusted, then please adjust S1 too.
When Z2 is adjusted, then please adjust S2 too.

With servo unit inside of types 3 and 4

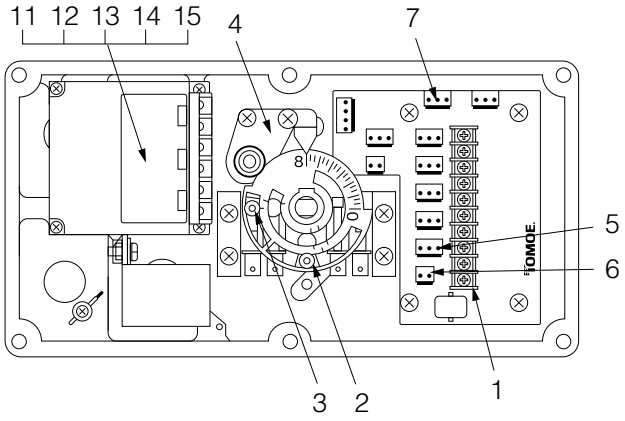

1	Terminal	7	RA: connector for potentiometer
2	Dog for open position	11	Trimmer for hysterisis adjustment
3	Dog for closed position	12	Trimmer for zero adjustment
4	Potentiometer	13	Trimmer for span adjustment
5	Connector for motor	14	Trimmer for output zero adjustment
6	Connector for motor capacitor	15	Trimmer for output span adjustment

Remarks: When Z1 is adjusted, then please adjust S1 too.
When Z2 is adjusted, then please adjust S2 too.

Parts list for New ELMY with speed controller unit(Type 0 to 4)

Inside of types 0, 1, 2 and 2.5

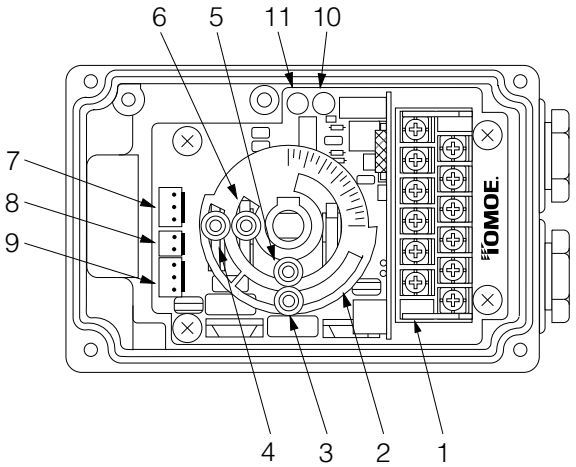

1	Terminal	7	Connector for potentiometer
2	Limit switch cam	8	Connector for motor capacitor
3	Dog for open position	9	Connector for motor
4	Dog for closed position	10	Trimmer for closed position
5	Dog for open signal	11	Trimmer for open position
6	Dog for closed signal		

Inside of types 3 and 4

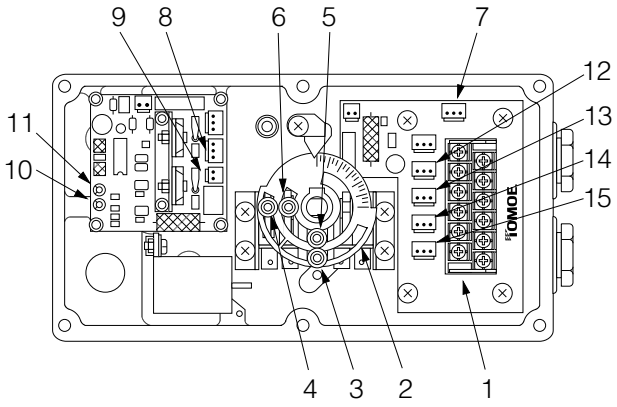

1	Terminal	9	Connector for motor
2	Limit switch cam	10	Trimmer for closed position
3	Dog for open position	11	Trimmer for open position
4	Dog for closed position	12	Connector for open signal
5	Dog for open signal	13	Connector for closed signal
6	Dog for closed signal	14	Connector for open limit switch
7	Connector for potentiometer	15	Connector for closed limit switch
8	Connector for motor capacitor		

New ELMY Adjustable operating speed (Type 0 to 4)

Stroke time for open to close and close to open can be set independently.
See the trimmer position for operating speed adjustment.

Trimmer position and stroke time

Position		Type 0, 1 and 2		Type 2.5		Type 3		Type 4	
		50Hz	60Hz	50Hz	60Hz	50Hz	60Hz	50Hz	60Hz
1		25 sec	20 sec	37 sec	30 sec	55 sec	50 sec	120 sec	105 sec
		Tolerance 5 sec				Tolerance 5 sec			
2		90 sec	70 sec	130 sec	110 sec	250 sec	220 sec	500 sec	450 sec
		Tolerance 20 sec				Tolerance 40 sec			
3		180 sec	150 sec	260 sec	220 sec	500 sec	440 sec	1100 sec	900 sec
		Tolerance 40 sec				Tolerance 80 sec			

(1) Carry out the procedure after the limit switch and stopper bolt are set.

(2) Adjust the trimmer with a screwdriver following the table above.

(3) Standard stroke time can be set by turning the trimmer fully in the clockwise direction.

(4) Stroke time can be adjusted by turning the trimmer counterclockwise.

New ELMY Rated current

Type	Motor voltage (V)	Impressed voltage (V)	Frequency (Hz)	Starting current (A)	Rated current (A)	Note
00	100	100	50	0.8	0.40	
			60	0.8	0.40	
	200	200	50	0.5	0.25	
			60	0.5	0.25	
	220		50	0.7	0.30	
			60	0.7	0.30	
0	100	100	50	1.2	0.50	
			60	1.2	0.50	
	200	200	50	0.5	0.25	
			60	0.5	0.25	
	220		50	0.7	0.30	
			60	0.7	0.30	
1	100	100	50	1.6	0.70	
			60	1.4	0.60	
	110		50	1.7	0.90	
			60	1.7	0.70	
	200	200	50	0.7	0.40	
			60	0.7	0.30	
	220		50	0.8	0.50	※
			60	0.9	0.40	※
	220	220	50	0.7	0.40	
			60	0.7	0.30	
	240	240	50	0.6	0.30	
			60	0.6	0.30	
2 2.5	100	100	50	2.4	0.90	
			60	2.4	1.20	
	110		50	2.5	1.00	
			60	2.5	1.20	
	200	200	50	1.1	0.50	
			60	1.1	0.80	
	220		50	1.2	0.60	※
			60	1.2	0.80	※
	220	220	50	1.1	0.50	
			60	1.0	0.50	
	240	240	50	0.9	0.50	
			60	0.9	0.60	
3 4	100	100	50	5.1	1.60	
			60	4.8	1.70	
	110		50	6.1	1.70	
			60	6.6	1.80	
	200	200	50	2.6	0.80	
			60	2.4	1.00	
	220		50	3.1	0.90	※
			60	3.0	1.00	※
	220	220	50	2.3	0.70	
			60	2.3	0.80	
	240	240	50	2.1	0.60	
			60	2.2	0.60	

"※" means not available as standard specification. Values are provided as reference.

Electric Motor Actuator with a built in Microcomputer

New MICOM ELMY® Ⅲ

The New MICOM ELMYⅢ offers highly accurate controllability, and its various functions are easily set via communication with a personal computer.

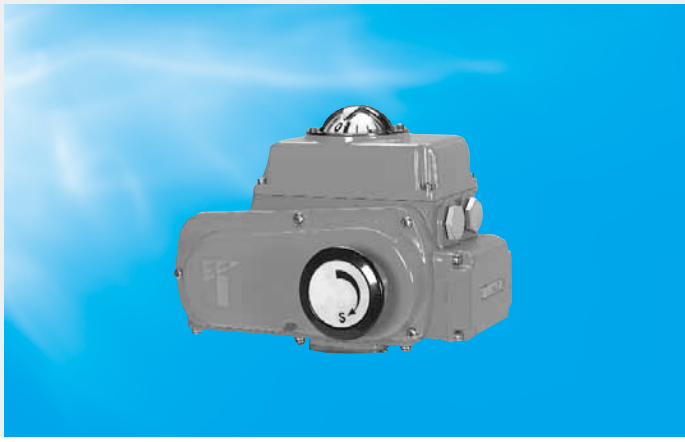

■Controller features

- **Flow characteristics can be set at work site with PC.**
- **High reliability**
- **Adjustable operating speed**
- **Multiple functions**
- **Compact**

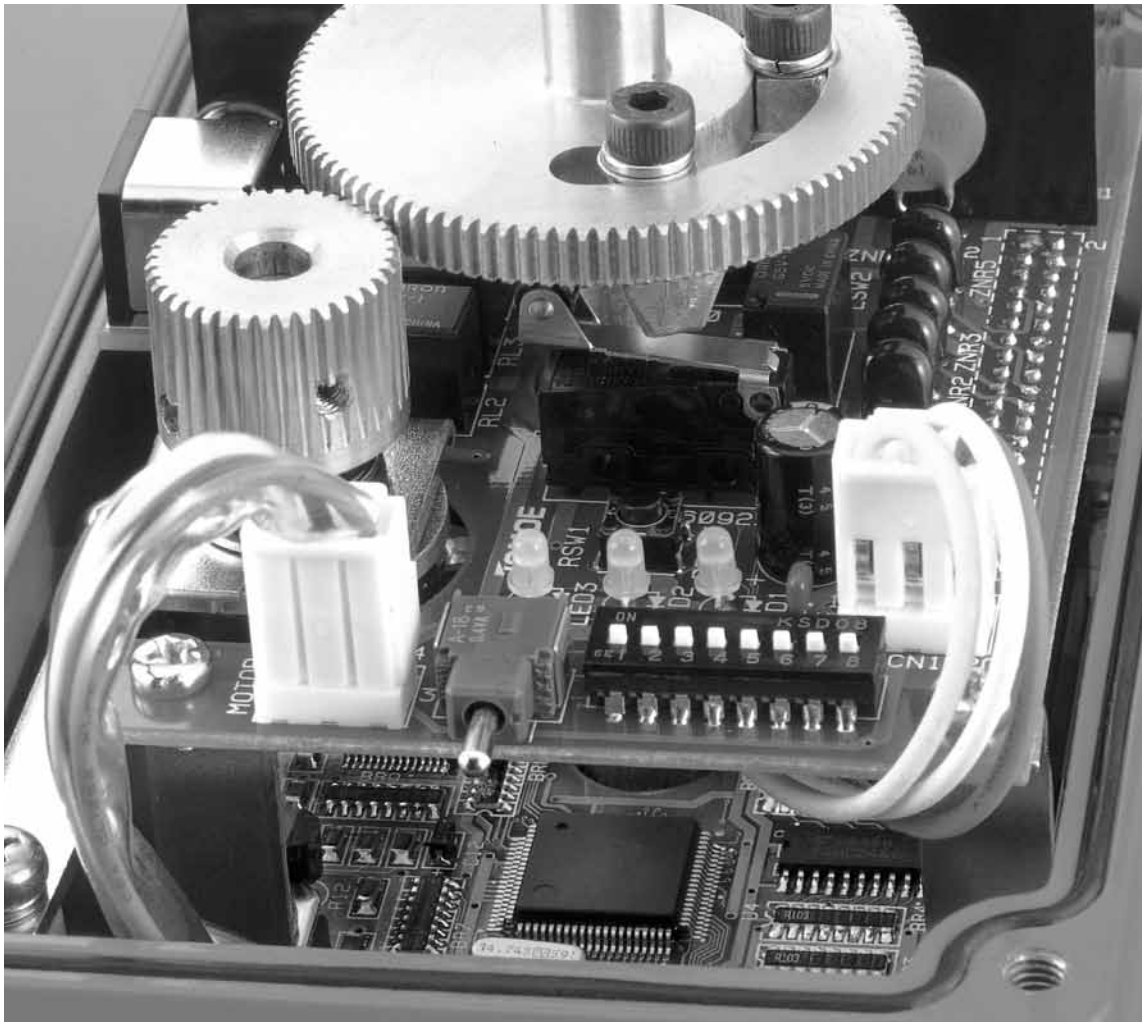

New MICOM ELMY Ⅲ Specifications (Controller)	
Model	New MICOM ELMY Ⅱ
Input signal	4 to 20mA DC (input resistance 250 ohm) 1 to 5V DC
Non-voltage contact input	Open／close signal (a contact)
Output signal	4 to 20mA DC (load resistance 300 Ω)
Non-voltage contact output	Open／close contact signal (Capacity AC220V-0.3A, DC24V-1A) Alarm output for hunching and thermal rising (Capacity AC220V-0.3A, DC24V-1A) Power off output for excessive torque and thermal rising (Capacity AC220V-0.3A, DC24V-1A)
Operation frequency rate	50% ED or less
Inching operation	60 times／min. or less
Positioning accuracy	± 1% (For operation range of 90 degrees C, input signal amplitude of 16mA during linear operation.)
Resolution	1／200 (For operation range of 90 degrees C, input signal amplitude of16mA during linear operation.)
Flow characteristic variation	Cv linear settings (concentric and eccentric type are built into controller.) Disc angle linear settings Flow linear settings
Input signal mode	Direct, reverse
Input signal failure mode	Stop, open, close or optional position
Output signal mode	Direct, reverse
Zero-span adjustment range	-5 to 95 degrees C
Hysterisis adjustment range	0.5 to 4.0% at full span
Operation speed control	Range and operation speed can be adjusted.
Protection function	Limit switch at full open and close Mechanical stopper

Resolution is set at 1/100 at the time of shipment. If any other resolution is required, please contact us.

New MICOM ELMY Ⅲ Specifications (Actuator)						
Type	Type 0	Type 1	Type 2	Type 2.5	Type 3	Type 4
Output torque(N·m)	70	98	196	333	981	2000
Power source(V)	AC100, 200, 220 50/60Hz					
Motor capacity(W)	8W	20W	30W		90W	
Operating range	0 to 90 degrees C					
Travel time(50／60Hz) (sec)	25/20 sec(0 to 90 degrees C)			37/30 sec (0 to 90 degrees C)	55/50 sec (0 to 90 degrees C)	125/105 sec (0 to 90 degrees C)
Insulation	Class E					
Enclosure	JIS C 0920 (IP 65), Class 5, dust and water-jet proof type					
Protect function	Built in mechanical thermal protector stopper at full open and close side					
Conduit connections	G1/2(PF1/2)2 port					
Manual operation	Detachable handle	Declutchable handwheel				
Motor protection	Built-in thermal protector					
Mechanical stopper	End of travel positioning bolt					
Environmental temperature during operation	−10 to 50 degrees C					
Environmental temperature during storage	−30 to 80 degrees C					
Paint finish	Epoxy-melanin baked with Munsell 2.5BG 6/12					

New MICOM ELMY Ⅲ Dimensions diagram

Type 0

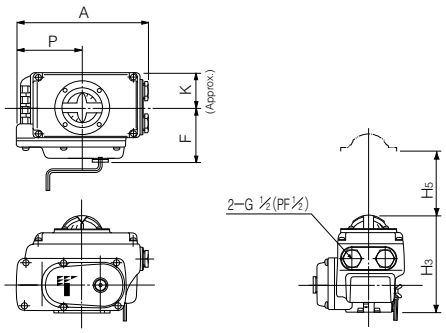

Type 2
Type 2.5

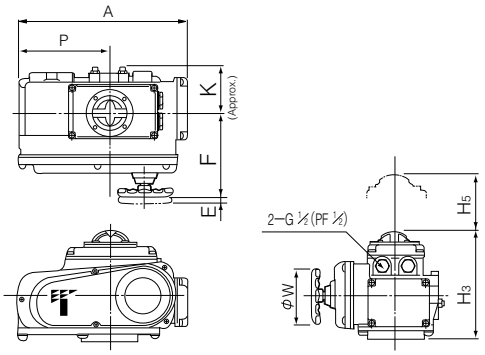

Type 1

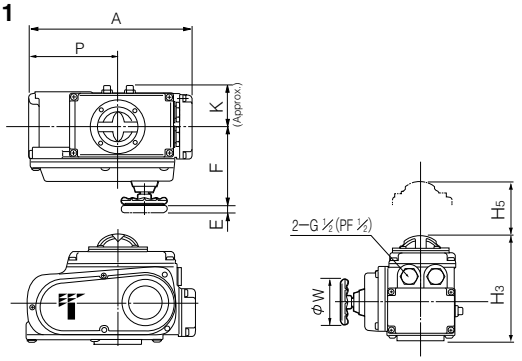

Type 3
Type 4

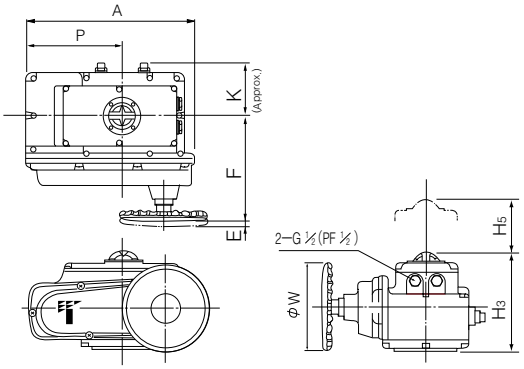

New MICOM ELMY Ⅲ Dimensions

Motor type	Dimensions (mm)								Approx. Mass (kg)
	H_3	H_5	P	A	E	F	K	ΦW	
Type 0	185	100	100	202	43	85	54	–	4.2
Type 1	191(193)	100	138	252	12	126	65	70	6.4
Type 2	224(227)	100	167	310	14	154	85	100	11.2
Type 2.5	224(227)	100	167	310	14	154	85	100	12.8
Type 3	255(258)	100	223	388	23	246	136	200	23.2
Type 4	255(258)	100	223	388	23	246	136	280	28.3

( ) shows non-ISO top dimension
The figure in ( ) is for other than 700G.

New MICOM ELMY Ⅲ Wiring diagram

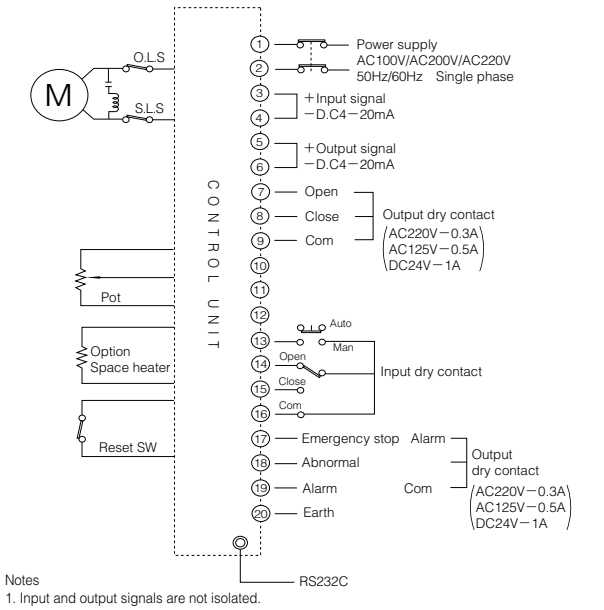

Notes
1. Input and output signals are not isolated.
2. This diagram shows when valve disc is at intermediate position.
3. Control unit can be used for each voltage by switching jumper pin, but motor actuator can not.
4. Priority is given to contact input signal over analog input signal.
5. Output for emergency stop is generated when analog signal is cut during contact input operation.

New MICOM ELMY Ⅲ Operation

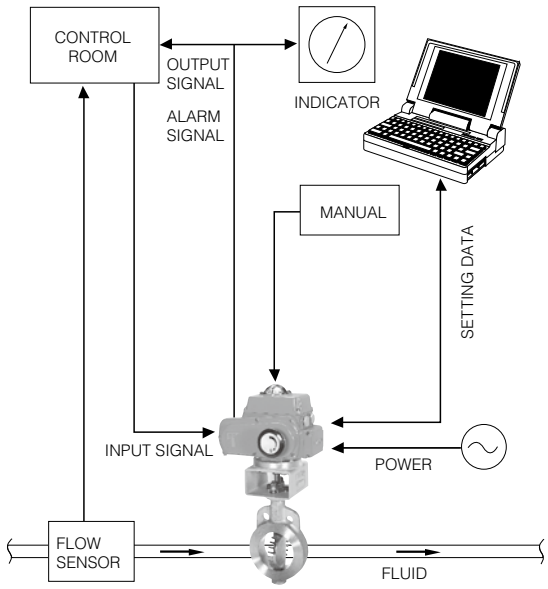

New MICOM ELMY Ⅲ Control functions

Function	By software	By DIP switch	Standard factory settings
Opening angle settings	○	○	0-90 or 0-70 degrees
Input signal settings	○	○	4-20mA
Output signal settings	○	○	4-20mA
Signal failure mode	○	○	Emergency stop
Signal failure mode variation	○	×	1mA or less is 5 sec.
Flow characteristic variation	○	Signal linear, CV linear for concentric type of valve, and CV linear for eccentric type of valve	No correction (linear signal)
Hysterisis variaton	○	×	Input signal: 1.0% Angle signal: 0.5%
Hunting setting	○	×	Time for judgment: 180 sec Frequency of operation: 90 Operation angle range: 10 degrees Average angle: 5 degrees
Hunting interval setting	○	×	Signal hysteresis transition: 0.5% Interval limit hysteresis: 2% Automatically returns to hysteresis of time of shipping after 6 hrs.
High frequency operation	○	×	When signal hysteresis exceeds 2% for hunting interval
Abnormal output shaft operation	○	×	30 sec. × 3 times
Temperature monitoring	○	×	Alarm: 50˚C
Communication speed	○	×	9600bps
Logging data transmittal	○	×	——
Display of setting data	○	×	——

New MICOM ELMY Ⅲ Initial setting mode at the time of shipment

Input signal	Reverse action
Output signal	Reverse action
Flow rate adjustment	No adjustment
Action at the time of abnormal situation	Emergency stop
Flow adjustment data	Hold the data before reset
Setting mode entry	Operation mode

New MICOM ELMY Ⅲ Operating system

Usage environment	RS232C interface (Connector: D-sub 9-pin) PC that can run Windows 2000, ME or 98 (Please consult us regarding Windows XP support.) Connect to PC with dedicated cable.

New MICOM ELMY Ⅲ Terminal board

Notes
1. Input and output signals are not insulated.
2. Use FG terminal for earth.
3. Priority is given to contact input of terminal Nos. 14 to 16 over input signals of Nos. 3 and 4. Even terminal No. 13 is set to AUTO.

Terminal block screw size: M3 (with washer)

Wiring diagram

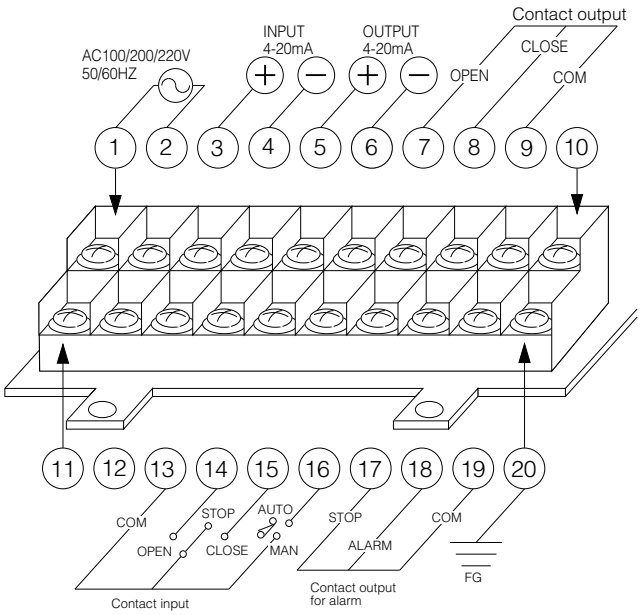

New MICOM ELMY Ⅲ Contacts

Terminals

	Terminal No.	Purpose	Capacity
Contact output	No. 7 (OPEN)	Outputs at full open position	AC220V-0.3A DC125V-0.5A DC24V-1A
	No. 8 (CLOSE)	Outputs at full closed position	
	No. 9 (COM)	COM for No. 7 and 8 terminals	
	No. 17 (STOP)	Outputs when abnormally stopped *1	
	No. 18 (ALARM)	Outputs when alarm signal transmitted *2	
	No. 19 (COM)	COM for No. 17 and 18 terminals	
Contact input	No. 13 (COM)	COM for No. 14, 15 and 16 terminals	
	No. 14 (OPEN)	Connect No. 13 when valve moves toward open direction	
	No. 15 (CLOSE)	Connect No. 13 when valve moves toward closed direction	
	No. 16 (AUTO/MAN)	Switching of auto and manual operation.	

*1: No. 17 works during signal failure, abnormal torque or temperature increase.
*2: No. 18 works during hunting or abnormal temperature increase.

Wiring diagram example
for combination of auto and manual
Operation by 4-20 mA signal.
Closed during manual operation.

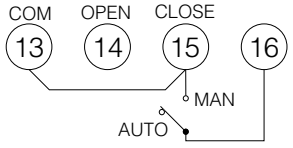

Operation by 4-20 mA signal.
Open during manual operation.

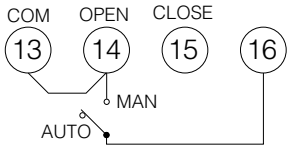

New MICOM ELMY Ⅲ Function and dip switch position

Setting item	Setting of dip switch							
	SW1	SW2	SW3	SW4	SW5	SW6	SW7	SW8
	Input signal							
Reverse action	OFF						OFF	OFF
Direct action	ON						OFF	OFF
	Output (feedback) signal							
Reverse action		OFF					OFF	OFF
Direct action		ON					OFF	OFF
	Opening degree adjustment							
None(Linear in accordance with signal)			OFF	OFF			OFF	OFF
Cv linear for concentric valve			OFF	ON			OFF	OFF
Cv linear for eccentric valve			ON	OFF			OFF	OFF
For customer use			ON	ON			OFF	OFF
	Signal failure mode							
Stop					OFF	OFF	OFF	OFF
Fully open					ON	OFF	OFF	OFF
Fully close					OFF	ON	OFF	OFF
Memorized opening degree					ON	ON	OFF	OFF
	***Initialization of setting data**							
Hold							OFF	OFF
Initialize							ON	OFF

Notes
1. Reset is necessary after switching.
2. An asterisk means all setting data (such as valve opening degree, input signal, zero span of output single, etc.) will be initialized.
3. Input signal: Reverse action: signal increase open
   Direct acton: signal increase close
4. Output signal: Reverse action: valve open signal increase
   Direct action: valve close signal increase
5. Shaded areas mean initial setting mode at the time of shipment.

New MICOM ELMY Ⅲ Parts list

Types 0, 1, 2 and 2.5

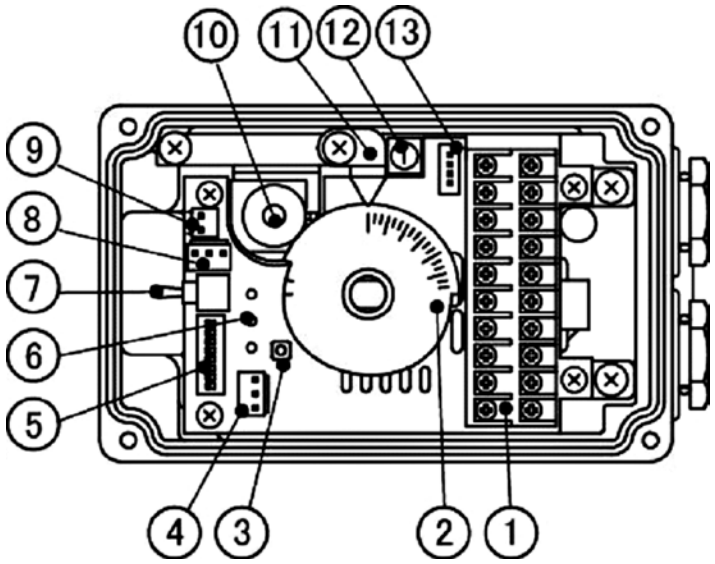

1	Terminal
2	Limit switch cam
3	Reset switch
4	Connector for potentiometer
5	Dip switch
6	LED
7	Toggle switch
8	Connector for motor
9	Connector for motor capacitor
10	Potentiometer
11	Sub-indicator
12	Rotary dip switch
13	Connector for interface

New MICOM ELMY Ⅲ Parts list

Types 3 and 4

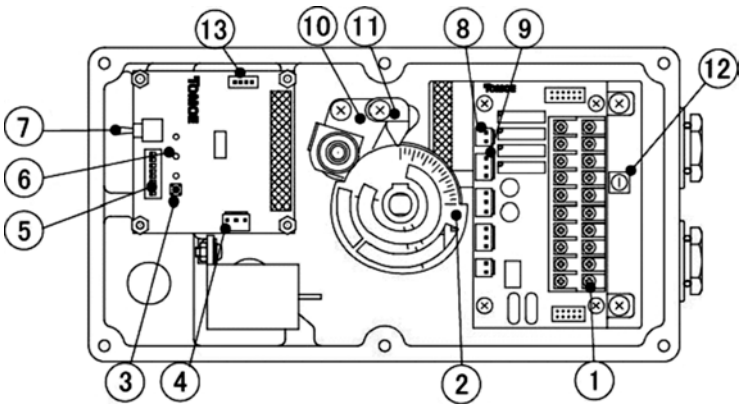

1	Terminal
2	Limit switch cam
3	Reset switch
4	Connector for potentiometer
5	Dip switch
6	LED
7	Toggle switch
8	Connector for motor
9	Connector for motor capacitor
10	Potentiometer
11	Sub-indicator
12	Rotary dip switch
13	Connector for interface

New MICOM ELMY Ⅲ Recommended fuse and non-fuse breaker

Type	Power source and frequency	Recommended capacity for fuse	Recommended capacity for non-fuse breaker
0, 1	100V/110V (50Hz/60Hz)	3A	3A
	200V/220V (50Hz/60Hz)	2A	2A
2, 2.5	100V/110V (50Hz/60Hz)	5A	5A
	200V/220V (50Hz/60Hz)	3A	3A
3, 4	100V/110V (50Hz/60Hz)	10A	10A
	200V/220V (50Hz/60Hz)	7A	7A

Emergency shut-off (open) motorized actuator

PMK-SRM

The PMK-SRM is an electrical spring return type actuator that does not require a power supply unit and protects your piping from damage during emergencies. It serves as a safety countermeasure for various fluid lines, from water, sewage and steam lines, to chemical and powder lines.



■Features

- **Reliable motorized spring return system**
- **Does not require a power supply unit**
- **On and off operations, proportional control, and emergency shut-off all in one device**

PMK-SRM Type Standard Specifications

Type		PMK-005SRM		PMK-010SRM		PMK-030SRM		PMK-080SRM	
Output torque		49N·m		88N·m		294N·m		784N·m	
Motor power source		AC100V 50/60Hz	AC200V 50/60Hz	AC100V 50/60Hz	AC200V 50/60Hz	AC100V 50/60Hz	AC200V 50/60Hz	AC100V 50/60Hz	AC200V 50/60Hz
Power consumption (VA)	Rated	35	48	46	48	130	120	200	200
	Startup	70	110	100	110	290	280	300	300
Travel time (50/60Hz) (sec)	Spring winding	55/43		55/46		61/49		60/50	
	Opening and closing	40/33		46/38		49/41		55/46	
	Emergency shut-off (return)	Max. 2		Max. 3		Max. 10		Max. 20	
Current value (A)	Spring winding	0.35	0.24	0.46	0.24	1.3	0.6	2.0	1.0
	Rated	0.09	0.04	0.09	0.04	0.12	0.06	0.24	0.12
Time rating		30 minutes							
No. of poles		4							
Insulation		Class E							
Motor protection		Thermal protector							
Space heater		Option							
Position limit switch		One each for fully open and fully closed (contact capacity: AC250V, 10A)							
Torque limit switch		None							
Mechanical limit stop		End of travel positioning bolt built-in							
Conduit connections		G3/4 at one port							
Enclosure		JIS C 0920 (IP54), Class 4, dust and water-jet proof type							
Manual operation		None							
Ambient temperature		−10 to 50 degrees C							
Coating		Silver hammer net (Munsell N7)							
Options		① Potentiometer (135 Ω, 500 Ω) ② Electro-electro Positioner (4 to 20 mA DC I/O)							

Note: A sun cover is required if you will be using this product outdoors. For details please consult us.

PMK-SRM Dimensions

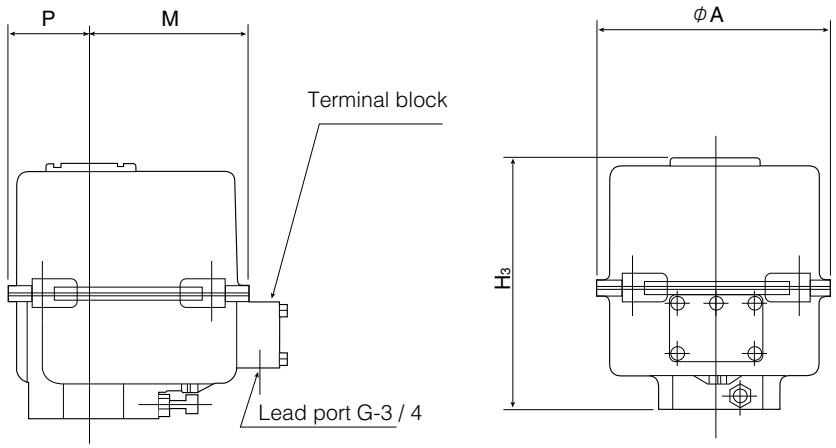

PMK-SRM Dimensions / Weight

Type	Dimension (mm)				Approx. Mass (kg)
	A	M	P	H3	
PMK-005SRM	205	171	70.5	221	10
PMK-010SRM	205	171	70.5	284	11
PMK-030SRM	240	206	85	457	35
PMK-080SRM	300	210	150	364	40

PMK-SRM Operation Circuit

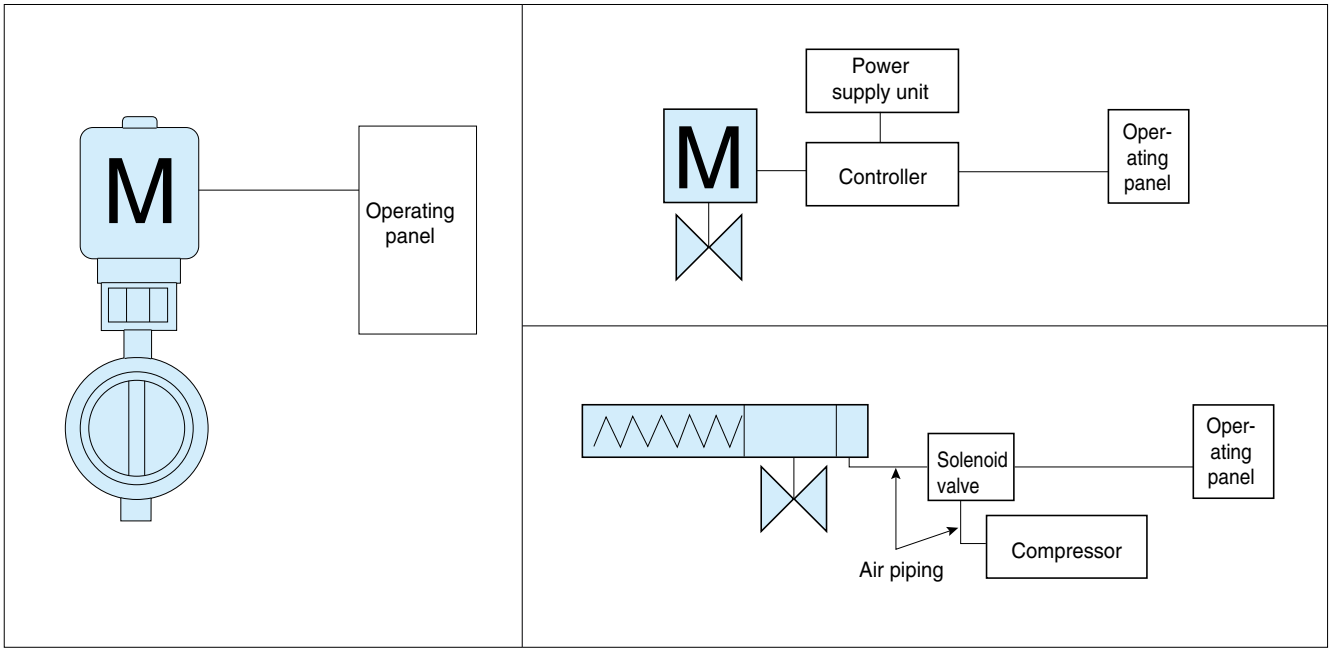

PMK-SRM Circuit and Explanation of Operation

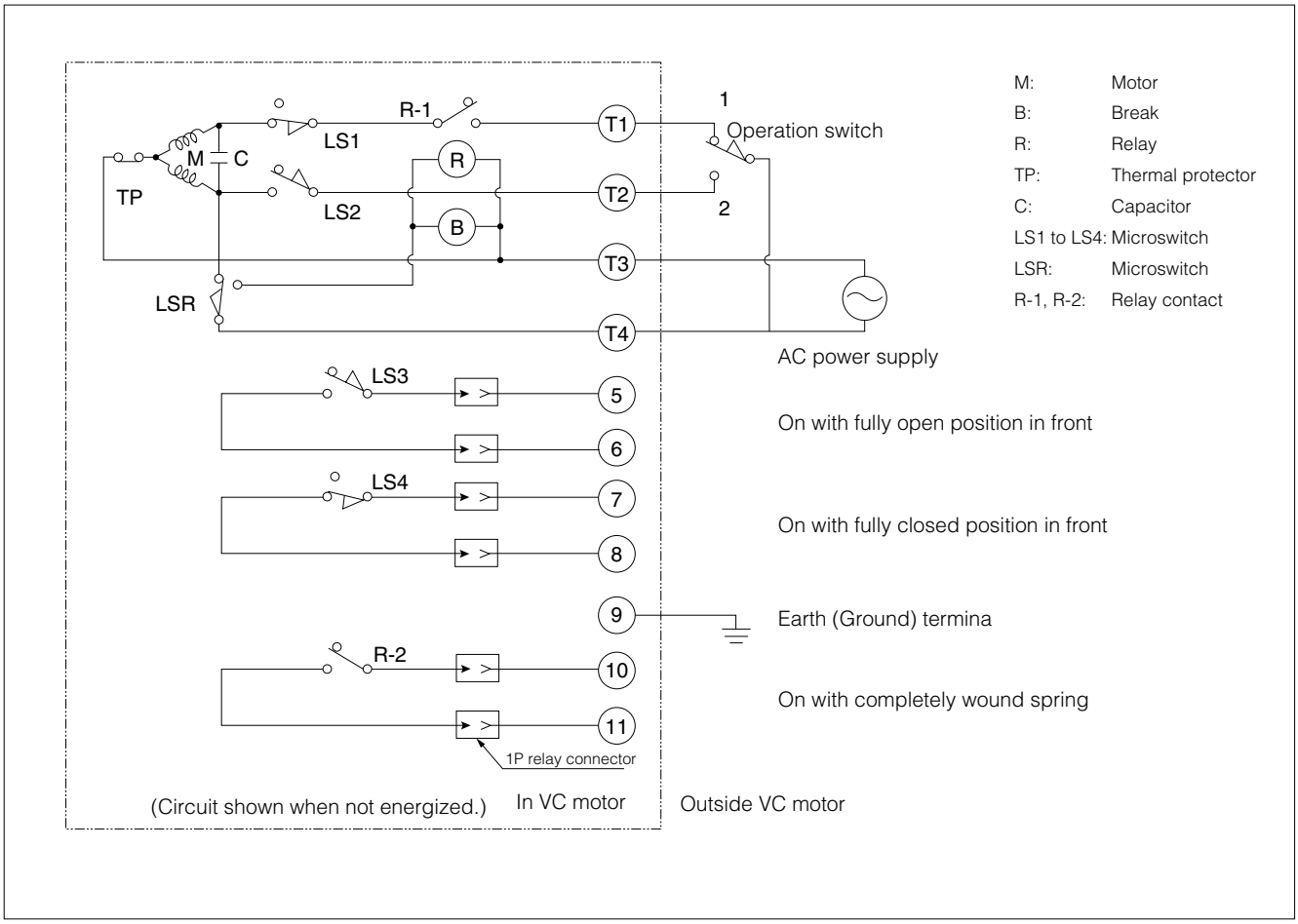

MEMO

SRJ

Lightweight, easy-to-handle, and completely waterproof Miniature motorized actuator for 90 degrees rotation rotary valves

Can be submersed (IP68)
Uses special gaskets and O-rings, with doublle-sealed terminals.

Case and covers of lightweight, high-rigidity aluminum alloy

Open/close torque and limit switches
Limit switch open/close both 1a1b.
Torque switch open/close both 1a1b.

Combines worm and spur high-speed reduction ratio gears

Exd II BT4 pressure-resistant, explosion-proof configuration available (complies with IEC standard)

Simplified external wiring
32 terminal contacts, 3-G1 cable feed-in port.

ISO flanges

Both open and close stoppers included

Includes handle and automatic recovery select lever

Rich range of options
-Auxiliary contact (limit switch)
-Opening angle transmitter
-R/I converter
-Proportional controller
Electronic controller

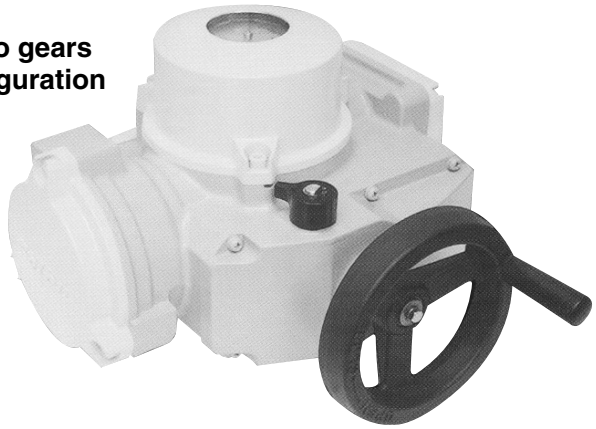

Electronic controller

Seitroller
Inputs the continuous DC signal from the adjustor or other system, compares it to valve angle (feedback potentiometer), and implements proportional control of valve. (Includes Seimitter functions.) Single-phase supply only.

Seimitter
Converts the valves opening angle signal (change in potentiometer resistance) to a continuous DC signal (4 to 20 mA DC), enabling remote monitoring angle.

SRJ Specifications

Type		SRJ-010	SRJ-020	SRJ-060	SRJ-1	SRJ-2
Output torque (Nm)		125	250	600	1000	2000
Power source		AC100V/110V, 200V/220V 50/60Hz Single-phase AC200V/220V,AC400V/440V 50/60Hz Triple-phase				
Motor capacity (W)		40		100	200	
Travel time (50/60 Hz) (sec.)	Standard time	18/15	36/30			72/60
	Setting at time of order	9/7.5	18/15			36/30
Mass (kg)		13		18	40	
Rating (min.)		15				
Insulation		B				
Motor protection		Thermal protector				
Stopper		Mechanical (full-closure/opening positioning bolt type)				
Position limit switch		Full-closure/opening, torque switch: one each (1a1b non-voltage)				
Torque limit switch		Contact capacity: AC250V-2A (at induction load), Contact capacity: DC125V-0.4A				
Conduit connections		G1, 3 ports				
Enclosure		IP68				
Manual operation		Reserve (round handle switching lever type auto return)				
Handle revolutions (to 90°)		20.8		26	79.4	
Options		① Pressure-resistant, explosion-proof (ExII BT4): Except SRJ-1 and SRJ-2 ② 2Potentiometer (135Ω, 200Ω and 500Ω) ③ Seimitter (R/I converter) ④ Intermediate valve opening output ⑤ Intermediate valve opening seimitter (Intermediate valve opening output, Seimitter R/I converter) ⑥ Seitroller (Power: single phase only)				

SRJ Dimensions

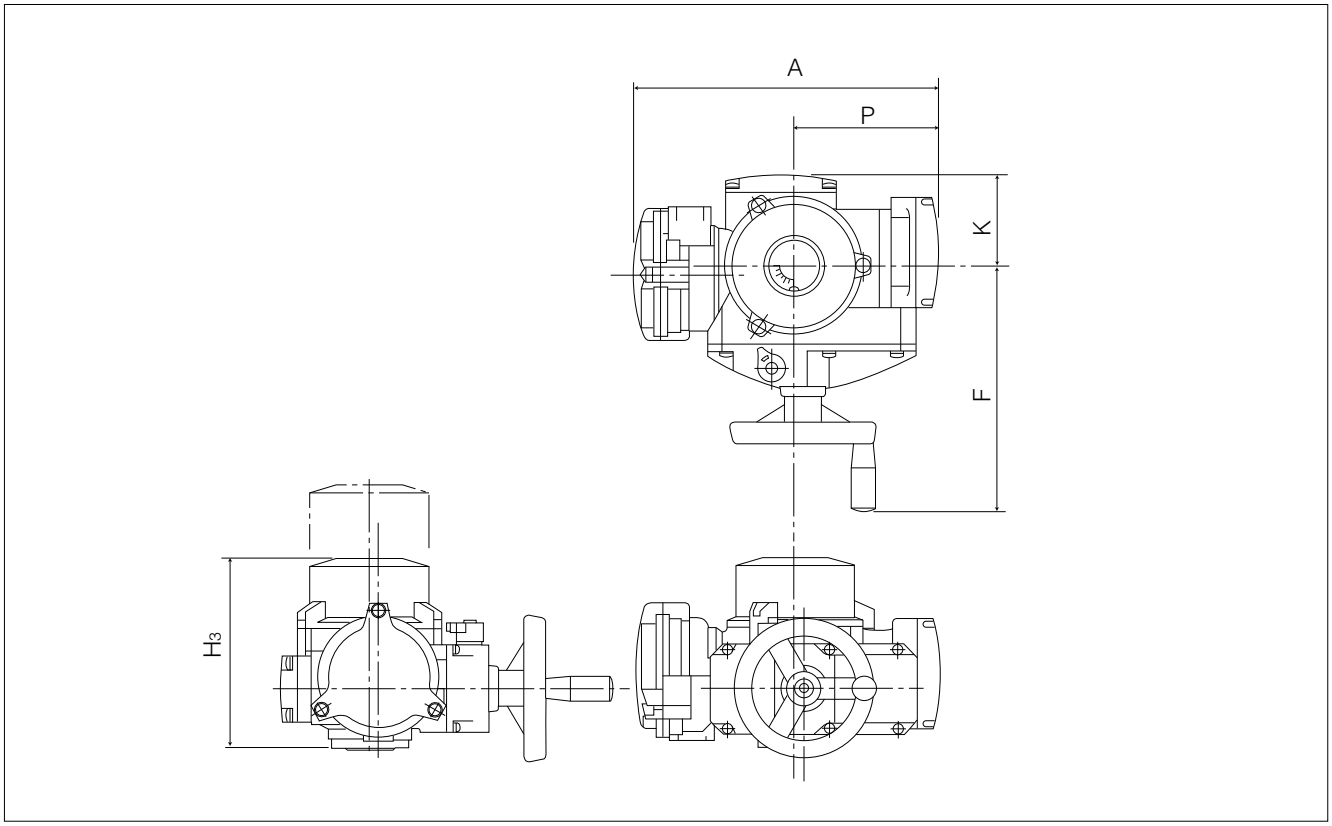

SRJ Dimensions and Weight

Type	Dimensions (mm)					Approx. Mass (kg)
	H3	A	P	F	K	
SRJ-010	218	353	167	286	104	13
SRJ-020	218	353	167	286	104	13
SRJ-060	235	393	191	330	130	18
SRJ-1	296	507	267	368	191	40
SRJ-2	296	507	267	368	191	40

SRJ Motor Rated Current

Type	Power source (V)	Frequency (Hz)	Single-phase motor		Three-phase motor	
			Starting current (A)	Rated current (A)	Starting current (A)	Rated current (A)
SRJ-010 SRJ-020	100	50	2.31	1.40	—	—
		60	2.34	1.44	—	—
	110	50	2.61	1.73	—	—
		60	2.59	1.50	—	—
	200	50	1.20	0.72	1.27	0.53
		60	1.19	0.78	1.19	0.45
	220	50	1.34	0.88	1.40	0.59
		60	1.33	0.80	1.28	0.48
	400	50	—	—	0.63	0.26
		60	—	—	0.58	0.22
	440	50	—	—	0.68	0.29
		60	—	—	0.63	0.23
SRJ-060	100	50	3.25	2.44	—	—
		60	3.38	2.48	—	—
	110	50	3.60	2.74	—	—
		60	3.71	2.50	—	—
	200	50	1.86	1.56	1.89	0.74
		60	1.82	1.13	1.77	0.67
	220	50	2.04	1.84	2.00	0.76
		60	2.01	1.27	1.92	0.67
	400	50	—	—	0.94	0.37
		60	—	—	0.90	0.34
	440	50	—	—	0.99	0.39
		60	—	—	0.97	0.34
SRJ-1 SRJ-2	100	50	9.33	4.98	—	—
		60	9.63	7.43	—	—
	110	50	10.27	5.15	—	—
		60	10.56	7.43	—	—
	200	50	4.34	2.18	4.57	1.10
		60	4.45	3.00	4.31	0.99
	220	50	4.87	2.28	5.07	1.06
		60	4.91	2.99	4.76	0.96
	400	50	—	—	2.35	0.53
		60	—	—	2.24	0.48
	440	50	—	—	2.48	0.52
		60	—	—	2.48	0.47

SRJ Wiring Diagram (Single-phase)

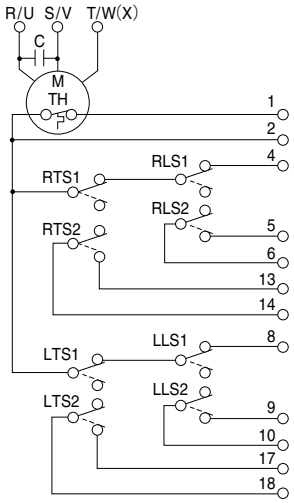

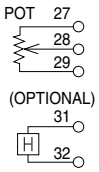

Terminal arrangement

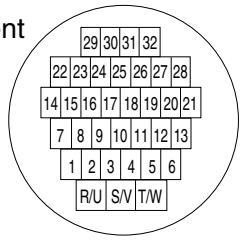

Switch	Terminal No.	Degree of valve opening	
		Left limit	Right limit
RLS1	1–4		
RLS2	5–6		
LLS1	1–8		
LLS2	9–10		

——— : Contact ON – – – : Contact OFF

13–14 : ON at right limit direction over-torque
1–4 : OFF at right limit direction over-torque
17–18 : ON at left limit direction over-torque
1–8 : OFF at left limit direction over-torque
31–32 : Heater power terminal

Direction of rotation

Single phase: Clockwise at R - (U), T - (X)
Single phase: Counterclockwise at R - (V), T - (X)
Direction of rotation refers to direction from the valve controller to the valve

Definition of codes

RLS1, RLS2 : Right directional rotation limit switch
LLS1, LLS2 : Left directional rotation limit switch
RTS1, RTS2 : Right directional rotation torque switch
LTS1, LTS2 : Left directional rotation torque switch

M : Motor
TH : Thermal protector
H : Heater
C : Condenser
POT : Potentiometer (option)

SRJ Wiring Diagram (Single-phase 3-wire)

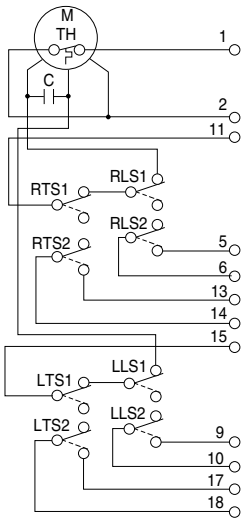

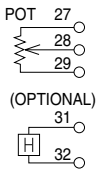

Terminal arrangement

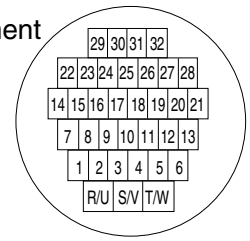

Switch	Terminal No.	Degree of valve opening	
		Left limit	Right limit
RLS1	1–11		
RLS2	5–6		
LLS1	1–15		
LLS2	9–10		

——— : Contact ON – – – : Contact OFF

13–14 : ON at right limit direction over-torque
1–11 : OFF at right limit direction over-torque
17–18 : ON at left limit direction over-torque
1–15 : OFF at left limit direction over-torque
31–32 : Heater power terminal
27,28,29 : Potentiometer terminal

Direction of rotation

Single phase: Clockwise at R - 1, T - 11
Single phase: Counterclockwise at R - 1, T - 15
Direction of rotation refers to direction from the valve controller to the valve

Definition of codes

RLS1, RLS2 : Right directional rotation limit switch
LLS1, LLS2 : Left directional rotation limit switch
RTS1, RTS2 : Right directional rotation torque switch
LTS1, LTS2 : Left directional rotation torque switch

M : Motor
TH : Thermal protector
H : Heater
C : Condenser
POT : Potentiometer (option)

SRJ Wiring Diagram (Three-phase)

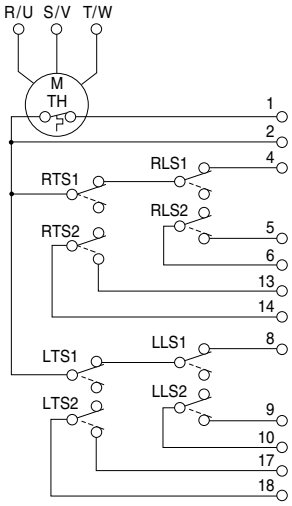

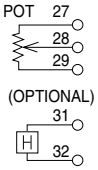

Terminal arrangement

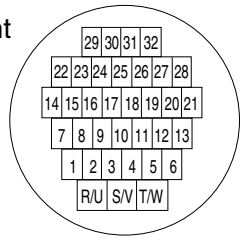

Switch	Terminal No.	Degree of valve opening: Left limit — Right limit
RLS1	1—4	
RLS2	5—6	
LLS1	1—8	
LLS2	9—10	

——: Contact ON – – – –: Contact OFF

13—14 : ON at right limit direction over-torque
1—4 : OFF at right limit direction over-torque
17—18 : ON at left limit direction over-torque
1—8 : OFF at left limit direction over-torque
31—32 : Heater power terminal

Direction of rotation

Three-phase: Clockwise at R - (W), S – (V), T - (U)
Three-phase: Counterclockwise at R - (U), S – (V), T - (W)
Direction of rotation refers to direction from the valve controller to the valve

Definition of codes

RLS1, RLS2 : Right directional rotation limit switch
LLS1, LLS2 : Left directional rotation limit switch
RTS1, RTS2 : Right directional rotation torque switch
LTS1, LTS2 : Left directional rotation torque switch

M : M: Motor
TH : TH: Thermal protector
H : H: Heater
C : C: Condenser
POT : POT: Potentiometer (option)

SRJ Wiring Diagram (Single-phase All terminals independent contact)

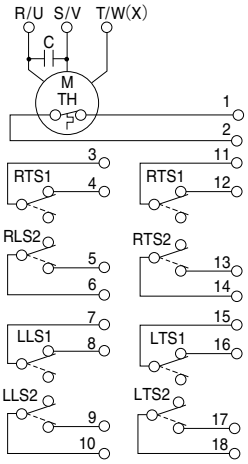

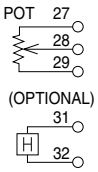

Terminal arrangement

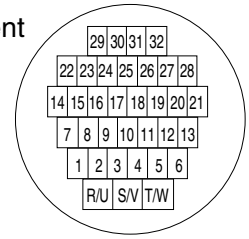

Switch	Terminal No.	Degree of valve opening: Left limit — Right limit
RLS1	3—4	
RLS2	5—6	
LLS1	7—8	
LLS2	9—10	

——: Contact ON – – – –: Contact OFF

13—14 : ON at right limit direction over-torque
11—12 : OFF at right limit direction over-torque
17—18 : ON at left limit direction over-torque
15—16 : OFF at left limit direction over-torque
31—32 : Heater power terminal

Direction of rotation

Single phase: Clockwise at R – (U), T – (X),
Single phase: Counterclockwise at R – (V),
Direction of rotation refers to direction from the valve controller to the valve

Definition of codes

RLS1, RLS2 : Right directional rotation limit switch
LLS1, LLS2 : Left directional rotation limit switch
RTS1, RTS2 : Right directional rotation torque switch
LTS1, LTS2 : Left directional rotation torque switch

M : Motor
TH : Thermal protector
H : Heater
C : Condenser
POT : Potentiometer (option)

SRJ Wiring Diagram (Three-phase, All terminals independent contact)

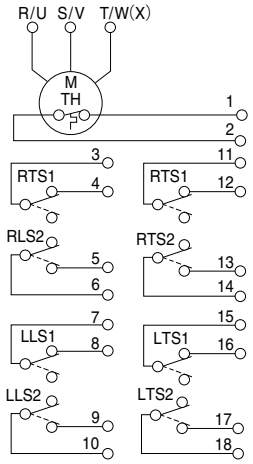

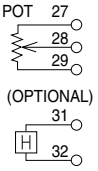

Switch	Terminal No.	Degree of valve opening: Left limit — Right limit
RLS1	3–4	
RLS2	5–6	
LLS1	7–8	
LLS2	9–10	

——: Contact ON – – – –: Contact OFF

Terminal arrangement

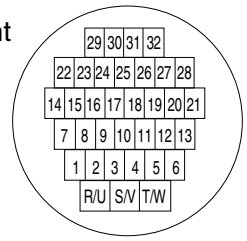

13–14 : ON at right limit direction over-torque
11–12 : OFF at right limit direction over-torque
17–18 : ON at left limit direction over-torque
15–16 : OFF at left limit direction over-torque
31–32 : Heater power terminal

Direction of rotation

Three-phase: Clockwise at R - (W), S – (V), T - (U)
Three-phase: Counterclockwise at R - (U), S – (V), T - (W)
Direction of rotation refers to direction from the valve controller to the valve

Definition of codes

RLS1, RLS2 : Right directional rotation limit switch
LLS1, LLS2 : Left directional rotation limit switch
RTS1, RTS2 : Right directional rotation torque switch
LTS1, LTS2 : Left directional rotation torque switch

M : Motor
TH : Thermal protector
H : Heater
C : Condenser
POT : Potentiometer (option)

SRJ Selection Chart

700 Series

Nominal size	mm	40	50	65	80	100	125	150	200	250	300	350	400	450
	inch	1 1/2	2	2 1/2	3	4	5	6	8	10	12	14	16	18
700G		SRJ-010					SRJ-020		SRJ-060			SRJ-1	SRJ-2	
763Z			SRJ-010					SRJ-020	SRJ-060					
704G / 722F			SRJ-010				SRJ-020		SRJ-060			SRJ-1	SRJ-2	
700S / 720F			SRJ-010				SRJ-020		SRJ-060			SRJ-1	SRJ-2	
731P			SRJ-010				SRJ-020		SRJ-060		SRJ-1			
732P			SRJ-010				SRJ-020		SRJ-060	SRJ-1				

500 Series

Nominal size	mm	40	50	65	80	100	125	150	200	250	300	350	400	450
	inch	1 1/2	2	2 1/2	3	4	5	6	8	10	12	14	16	18
508V			SRJ-010		SRJ-010			SRJ-020	SRJ-060		SRJ-1	SRJ-2		
507V			SRJ-010		SRJ-010			SRJ-020		SRJ-060				

300 Series

口径	mm	40	50	65	80	100	125	150	200	250	300	350	400	Nominal size
	inch	1 1/2	2	2 1/2	3	4	5	6	8	10	12	14	16	
302Y	TL	SRJ-010					SRJ-020	SRJ-060		SRJ-1	SRJ-2			T_L
	TH	SRJ-010			SRJ-020			SRJ-060		SRJ-2				T_H
302A	T10				SRJ-010		SRJ-020		SRJ-060		SRJ-1	SRJ-2		Category A
												SRJ-2		Category B
	T20				SRJ-010	SRJ-020		SRJ-060		SRJ-1	SRJ-2			Category C
304Y	T10	SRJ-010						SRJ-020	SRJ-060					T10
	T20	SRJ-010					SRJ-020		SRJ-060					T20
304A	T10				SRJ-010			SRJ-020	SRJ-060			SRJ-2		Category A
												SRJ-2		Category B
	T20				SRJ-010		SRJ-020		SRJ-060					Category C

MEMO

Large Motorized Actuator

LTKD

The LTKD type is a motorized actuator suitable mainly for valve sizes 350A and higher, and uses three-phase 200 V and 400 V power supplies. In addition to on-off control, it can be used for slot-ring control because of its built-in electric positioner (seitroller). It also supports special specification requirements.



■Features

- **Utilizes dedicated high-torque motor.**
- **Highly reliable counter-gear-type cam limit switch**
- **Output shaft dual sleeve system**
- **Supports wide range of output torques and open-close times by combining motors of differing capacities.**

LTKD Specifications							
Type	LTKD-01		LTKD-02		LTKD-05		LTKD-1
Motor capacity (Wk)	0.2	0.4	0.4	0.75	0.75	1.5	1.5
Weight (kg)	55	58	72	83	127	130	187
Power source (V)	AC200, AC220, AC400V, AC440　50/60Hz　Three phase						
Rating (min)	15 min. (With brake: 30 min.)						
Number of poles	4						
Insulation	Class B　(option class F and H)						
Motor protection	None (Please provide thermal relay separately.)						
Space heater	Supplied as standard specification (Rated power: 15W)						
Position limit switch	1 each for fully open and fully closed (contact capacity: AC250V, 5A)						
Torque limit switch	1 each for fully open and fully closed (contact capacity: AC250V, 15A)						
Brake	Optional (Will not be supplied as standard.)						
Conduit connection	G1 at two locations (for control) and G3/4 (for motor)						
Enclosure	JIS C 0920 (IP 55), class 5, dust and water-jet proot type						
Manual operation	Always (round handle and built-in manual return clutch)						
Ambient temperature	−10 to 50 degrees C						
Coating	Lacqure primer (Munsell N7)						
Options	①Potentiometer　500Ω, 1kΩ ②Intermediate limit switch (no voltage) ③Synchro reciever, transmitter ④Seimitter (R/I converter) ⑤Seitroller (DC4 to 20mA I/O) ⑥Withstand pressure anti-explosion type (d2G4)						

Remark: Open and close time differs depending on motor gear ratio (number of sleeve rotations) and type of secondary reducer.

LTKD Dimensions

LTKD-01, 02

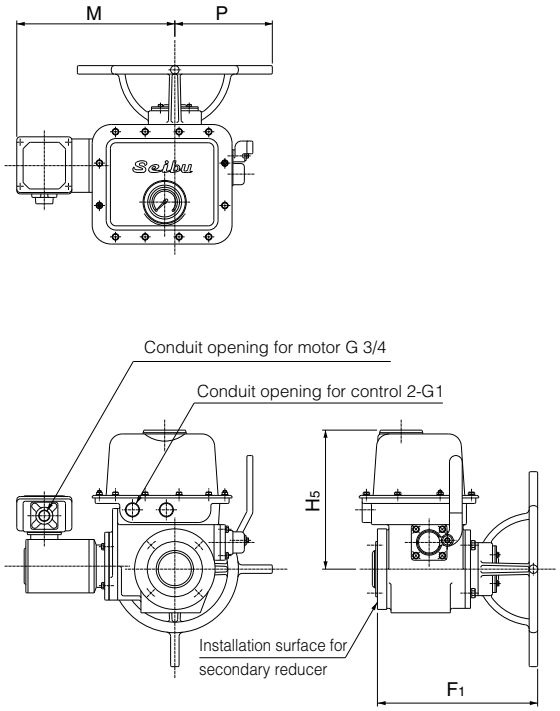

LTKD-05, 1

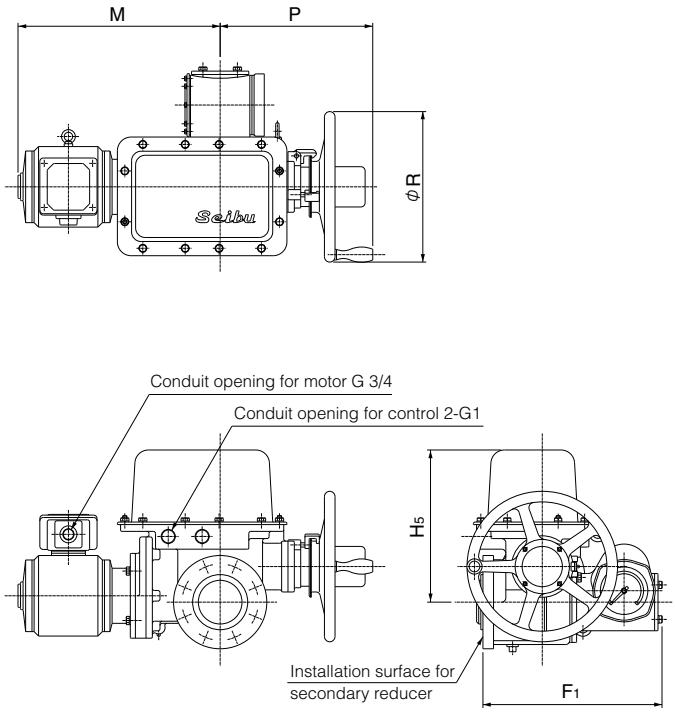

LTKD Dimensions and Weight

Type	Motor capacity	Dimensions (mm)					Approx.Mass (kg)
		M	P	F_1	H_5	R	
LTKD-01	0.2kW	363	230	342	293	—	55
	0.4kW	373	230	342	293	—	58
LTKD-02	0.4kW	373	230	378	328	—	72
	0.75kW	400	230	378	328	—	83
LTKD-05	0.75kW	440	360	422	359	355	127
	1.5kW	477	360	422	359	355	130
LTKD-1	1.5kW	537	410	488	399	355	187

Remark: The table above shows dimensions for an actuator with a motor without brake.

LTKD Motor currents

Type	Impressed voltage (V)	Frequency (Hz)	No brake (Type B and Standard)		With brake (Type B and Option)	
			Rated current (A)	Starting current (A)	Rated current (A)	Starting current (A)
0.2kW	200	50	1.8	7.6	1.9	7.6
	200	60	1.4	6.9	1.5	6.9
	220	50	—	—	—	—
	220	60	1.5	7.6	1.7	7.6
	400	50	0.91	3.9	1.0	3.9
	400	60	0.75	3.6	0.85	3.6
	440	50	—	—	—	—
	440	60	0.78	4.0	0.89	4.0
0.4kW	200	50	2.5	10.2	2.6	10.2
	200	60	2.2	9.6	2.3	9.6
	220	50	—	—	—	—
	220	60	2.2	9.6	2.3	10.6
	400	50	1.2	4.6	1.3	4.6
	400	60	0.99	4.4	1.1	4.4
	440	50	—	—	—	—
	440	60	1.1	4.9	1.2	4.9
0.75kW	200	50	3.9	18.9	4.0	18.9
	200	60	3.5	17.3	3.7	17.3
	220	50	—	—	—	—
	220	60	3.4	19.4	3.6	19.4
	400	50	1.9	9.0	2.0	9.0
	400	60	1.8	8.4	1.9	8.4
	440	50	—	—	—	—
	440	60	1.8	9.5	1.9	9.5
1.5kW	200	50	7.7	38.0	7.9	38.0
	200	60	6.9	35.0	7.1	35.0
	220	50	—	—	—	—
	220	60	6.6	39.5	6.8	39.5
	400	50	3.9	19.0	4.0	19.0
	400	60	3.5	17.5	3.7	17.5
	440	50	—	—	—	—
	440	60	3.3	19.8	3.5	19.8

LTKD Wiring diagram

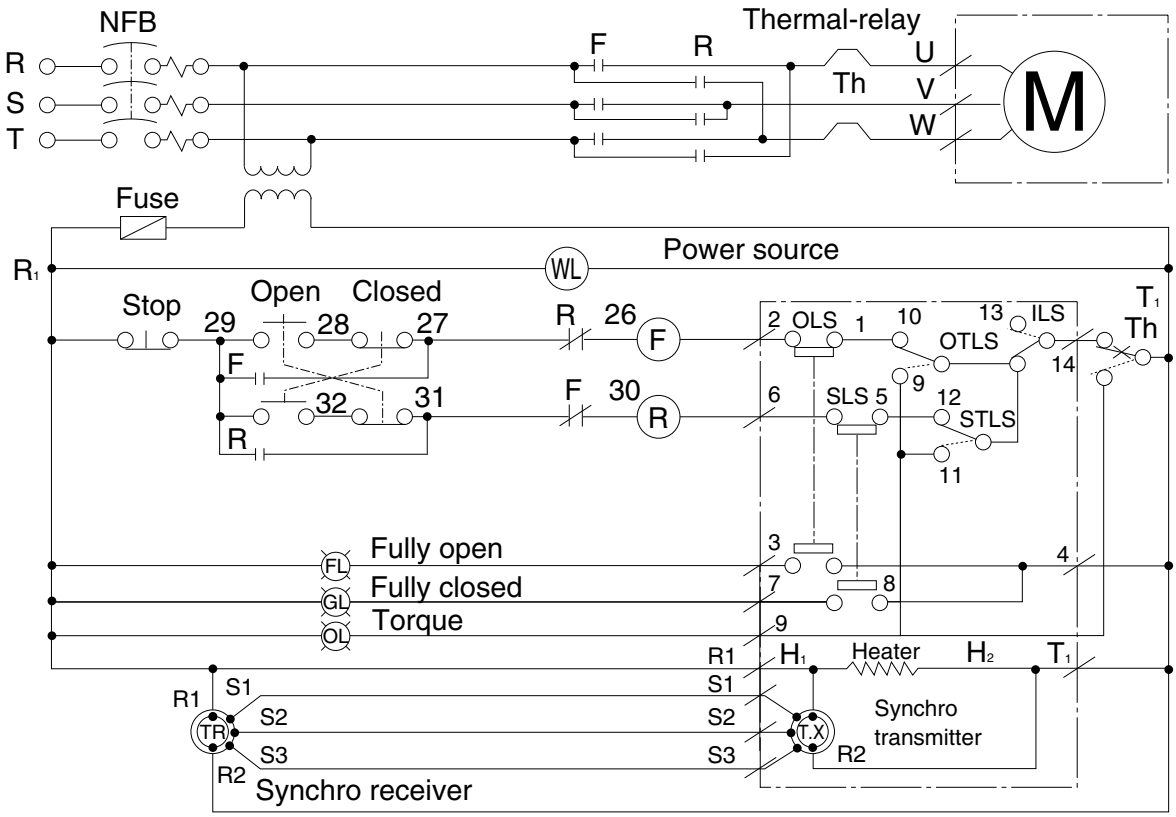

Outside terminals

R	S	T	U	V	W	R_1	T_1	2	3	4	6	7	9	14	S1	S2	S3			

: LTKD unit

OLS: Limit switch at open

SLS: Limit switch at close

OTLS: Torque switch at open

STLS: Torque switch at close

ILS: Interlock switch

New T-DYNAMO® (7E/7F/7G)

We have pursued top-level performance that carries on the excellence of the T-matic cylinder, our top-selling pneumatic actuator for butterfly valves. Employing an NAMUR mount, this unit is compact and lightweight, and offers high output and further heightened perfection as a complete system.

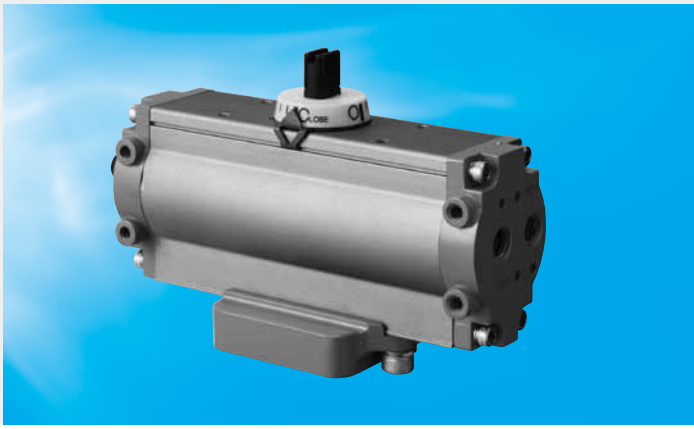

■Features

- **Direct valve installation with bottom ISO mounting.**
- **Completely direct mounting of valve installation section.**
- **NAMUR mount at pneumatic port connections and accessories interface.**

New T-DYNAMO Standard specifications

	Double-acting type					Single-acting type			
Type Torque (N·m)(When supply pressure is 0.4MPa and rotation angle is 0°)	T35	T85	T200	T380	T750	T85S	T200S	T380S	T750S
	35	85	200	380	750	30	65	116	240
Supply air pressure condition/temperature	−10 to 60 degrees C								
Air Supply Pressure	0.4 to 0.7MPa								
Body shell max (MPa)	1.05MPa								
Air connection (Rc)	Rc(PT)1/4								
Rotating angle	90°								
Ambient temperature	−10 to 60 degrees C								
Travel time(sec) with speed controller	1 to 15 sec	2 to 15 sec	3 to 15 sec	7 to 20 sec	12 to 25 sec	2 to 15 sec	6 to 15 sec	8 to 20 sec	15 to 25 sec

※The opening and closing times are the times in the case of a single unit of a cylinder with a standard speed controller (SP-K017-Z03-006) and a solenoid valve (PCS2408-03-100MC) when the air supply pressure is 0.4MPa. The opening and closing times depend on pneumatic piping system, etc.

New T-DYNAMO Principle of operation

■Double-acting type cylinder

(1) The cylinder space which is enclosed by the case ① and the covers⑥ and ⑦ is divided into airtight chambers ⓐ and ⓑ by the pistons ⑤ and the piston packing ㉔.
(2) The shaft ② penetrates the chamber ⓑ of the case. The yoke ③ is fitted in the hole across the shaft in such a way that it allows it to slide in the hole. The top of the yoke is connected with the parallel pins ㉜ so it rotates in accordance with the movement of the pistons.
(3) The compressed air enters chamber ⓐ through port A and pushes the pistons. The air in chamber ⓑ is exhausted through port B as the pistons move due to a pressure difference between the two chambers. Integrated with these pistons, the parallel pins ㉜ also move and torque in the shaft is generated.

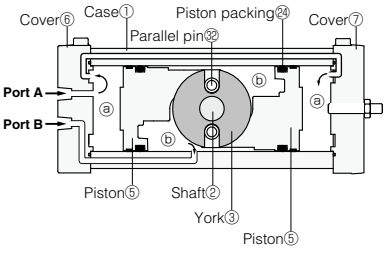

■Single-acting type cylinder

(1) The cylinder space which is enclosed by the case ① and the covers⑥ and ⑦ is divided into airtight chambers ⓐ and ⓑ by the pistons ⑤ and the piston packing ㉔.
(2) The shaft ② penetrates the chamber ⓑ of the case. The yoke ③ is fitted in the hole across the shaft in such a way that it allows it to slide in the hole. The top of the yoke is connected with the parallel pins ㉜ so it rotates in accordance with the movement of the pistons.
(3) The compressed air enters chamber ⓑ through port B and pushes the pistons. The air in chamber ⓐ is exhausted through port C as the pistons ⑤ move and the spring ㊷ is squeezed due to a pressure difference between the two chambers. Integrated with these pistons ⑤, the parallel pins ㉜ also move and torque in the shaft is generated.
(4) When air supply to Port B is stopped, the pistons are pushed back due to the force of the spring ㊷ and torque in the shaft is generated.

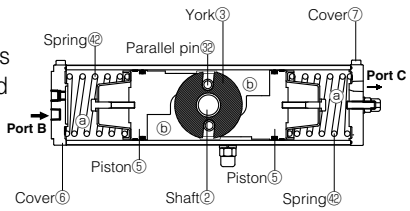

New T-DYNAMO Dimensions

Double-acting type

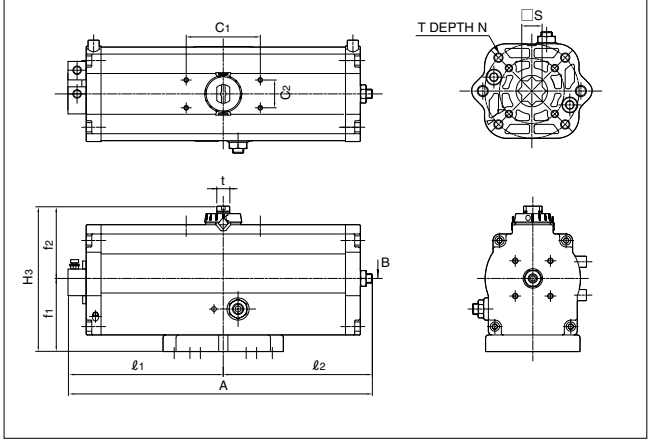

Single-acting type

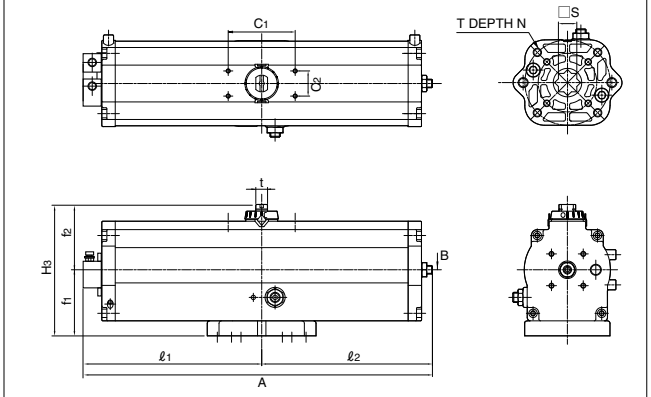

New T-DYNAMO Dimension list

Cylinder type		Dimension (mm)											Cylinder capacity (litter/st)	Approx. Mass (kg)
		A	P1	P2	H3	C1	C2	f1	f2	S	MG	N		
T35	P.C.D.70	202.5	112	90.5	125	80	30	57	35	12	M8	13	0.2	1.7
T85	P.C.D.70	251	134	117	168	80	30	75	51	14	M8	17	0.5	4.6
	P.C.D.102										M10	20		
T200	P.C.D.70	320.5	170	150.5	203	80	30	79	51	18	M8	15	1.1	7.9
	P.C.D.102										M10	20		
T380	P.C.D.70	397.5	208.5	189	231	80	30	91	62.5	24	M8	15	2.1	14
	P.C.D.102										M10	18.5		
	P.C.D.125										M12	20		
T750	P.C.D.102	520.5	276	244.5	269	80	30	118	70	24	M10	18.5	4.6	24
	P.C.D.125										M12	23		
	P.C.D.140										M16	28		

New T-DYNAMO Dimension list

Cylinder type		Dimension (mm)											Cylinder capacity (litter/st)	Approx. Mass (kg)
		A	P1	P2	H3	C1	C2	f1	f2	S	MG	N		
T85S	P.C.D.70	338.5	181	157.5	168	80	30	75	51	14	M8	17	0.5	6.2
	P.C.D.102										M10	20		
T200S	P.C.D.70	423.5	223	200.5	203	80	30	79	51	18	M8	15	1.1	10.7
	P.C.D.102										M10	20		
T380S	P.C.D.70	524.5	273.5	251	231	80	30	91	62.5	24	M8	15	2.1	18.9
	P.C.D.102										M10	18.5		
	P.C.D.125										M12	20		
T750S	P.C.D.102	697.5	363	334.5	269	80	30	118	70	24	M10	18.5	4.6	32.4
	P.C.D.125										M12	23		
	P.C.D.140										M16	28		

New T-DYNAMO Output torque curves

Double-acting type

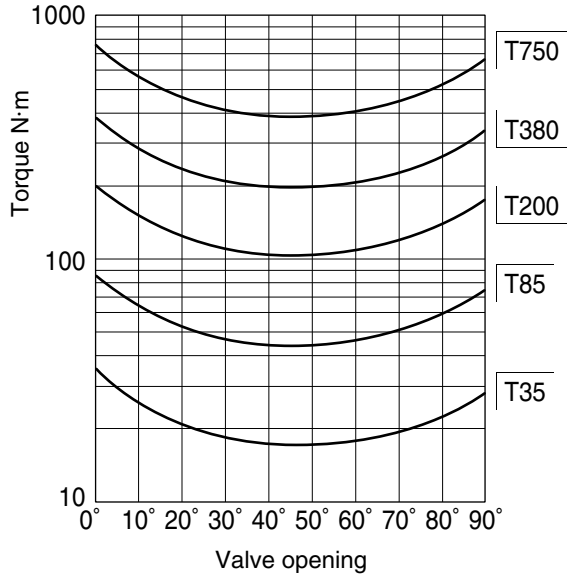

Single-acting type (spring returned type)

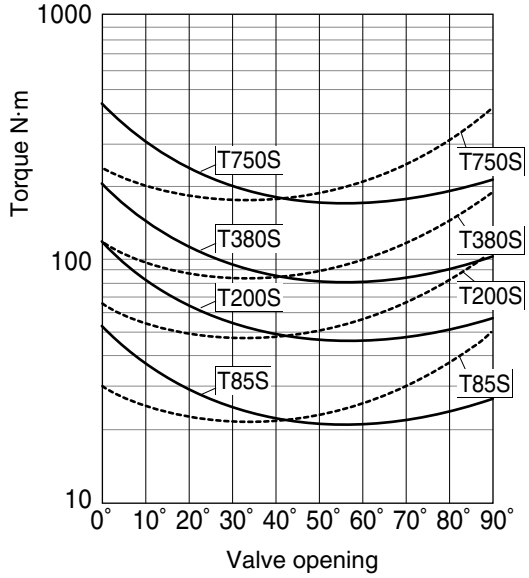

① The table shows the torque at an operating air pressure of 0.4 MPa.
② Output torque for an operating air pressure of P MPa is given by : = P x (torque value obtained from the table)/0.4. (Only double-acting type cylinder)
③ In the case of single-acting type cylinders, the spring force does not change even if the operating air pressure is changed. Thus the torque indicated by the dotted lines is constant regardless of the operating air pressure.
④ In the case of single-acting type cylinders, the output torque value at open→close is different from that at close→open. The continuous lines and dotted lines indicate the torques respectively.

	7G (Open with pressure)	7F (Close with pressure)
Continuous line	Torque at close→open with air pressure	Torque at close→open with spring
Dotted line	Torque at open→close with spring	Torque at open→close with air pressure

⑤ A valve for the single-acting type cylinder should be selected referring to the torque indicated with a dotted line.

New T-DYNAMO Output torque

Double-acting type

(N·m)

Type	Supply pressure (MPa)			
	0.4	0.5	0.6	0.7
T35	35	43	52	61
T85	85	106	127	148
T200	200	250	300	350
T380	380	475	570	665
T750	750	937	1125	1312

Single-acting type (spring returned type)

(N·m)

Type	Supply pressure (MPa)								Spring	
	0.4		0.5		0.6		0.7			
	0°	90°	0°	90°	0°	90°	0°	90°	0°	90°
T85S	55	30	76	51	97	72	118	93	30	55
T200S	135	65	185	115	235	165	285	215	65	135
T380S	264	116	359	211	454	306	549	401	116	264
T750S	510	240	697	427	885	615	1072	802	240	510

New T-DYNAMO Air Consumption

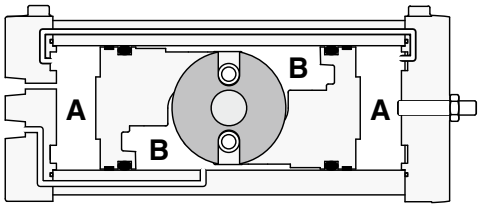

(1) Required air consumption

Double-acting type

$$VD=(A+B)\left(\frac{P+0.1013}{0.1013}\right)N$$

Single-acting type

$$VS=(B)\left(\frac{P+0.1013}{0.1013}\right)N$$

V D : Double-acting type cylinder air consumption (N ℓ)
V S : Single-acting type cylinder air consumption (N ℓ)
A,B : Cylinder capacity (ℓ)
P : Working pressure (MPa)
N : Operating frequencies in a given time (1 round trip=1)

(2) Air consumption within a unit time

Double-acting type $CD=\frac{VD}{t}$

Single-acting type $CS=\frac{VS}{t}$

C D : Double-acting type cylinder aircon-sumption (N ℓ/sec)
C S : Single-acting type cylinder air consumption (N ℓ/sec)
t : Unit time (sec)

(Note) The compressor should have a larger capacity than air consumption calculated in above (1)and (2).

•Double-acting type

type	Cylinder capacity (ℓ)	
	A	B
T35	0.2	0.2
T85	0.4	0.5
T200	0.8	1.1
T380	1.8	2.1
T750	3.2	4.6

•Single-acting type

type	Cylinder capacity (ℓ)
	B
T85S	0.5
T200S	1.1
T380S	2.1
T750S	4.6

New T-DYNAMO Expanded view of component T35 to T750(double-acting type)

Note: The parts numbers marked with □ indicate “O-ring set”.
Please exchange all the parts included in the set.

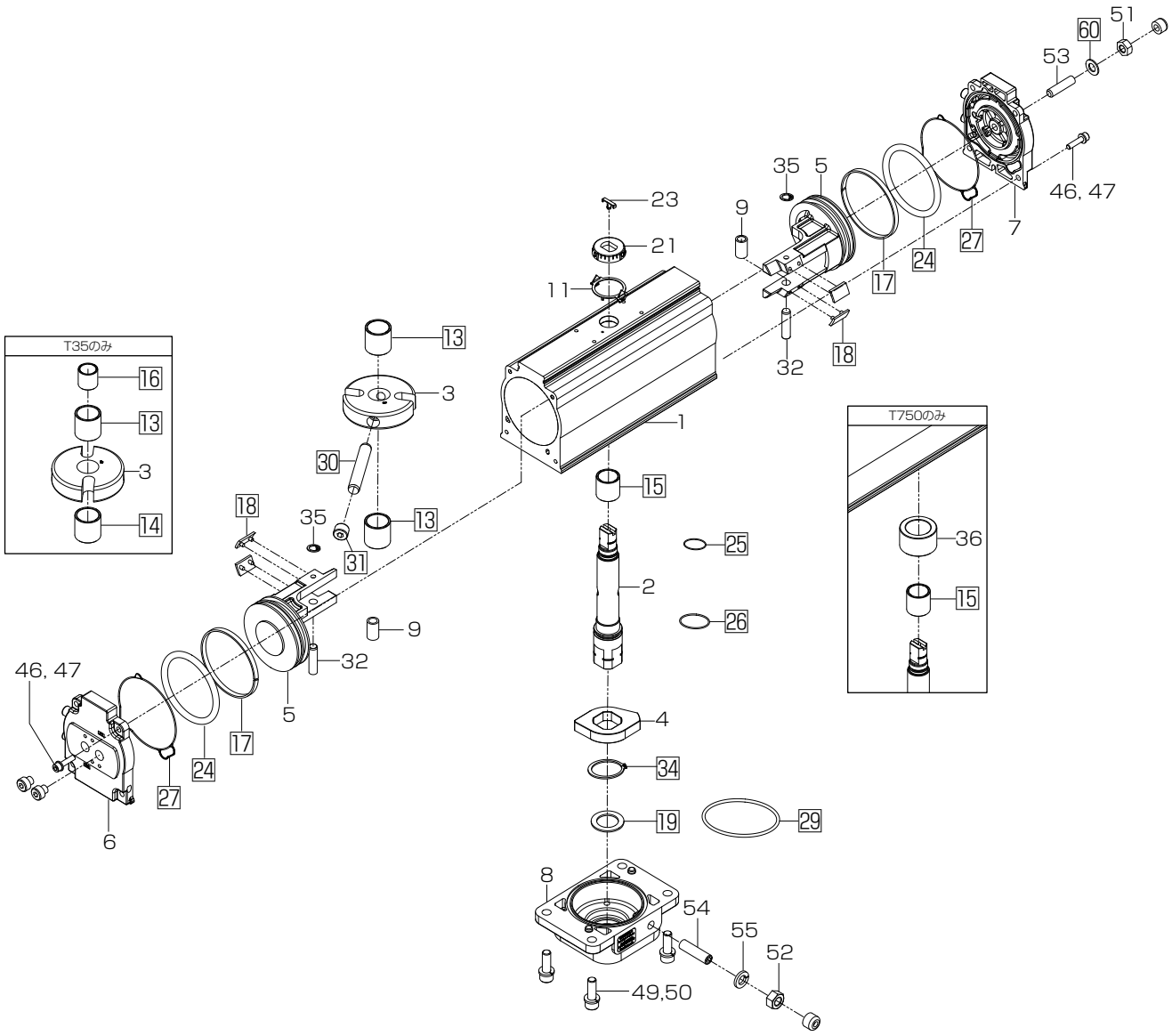

New T-DYNAMO Parts list T35 to T750(double-acting type)

■Double-acting type

No.	Description	Q'ty	Remarks
1	Case	1	
2	Shaft	1	
3	Yoke	1	
4	Stopper	1	
5	Piston	2	
6	Cover 1	1	
7	Cover 2	1	
8	Base plate	1	
9	Bearing	2	
11	Indicator plate	1	
★ 13	Bearing 1	2	T35:1pc
★ 14	Bearing 2	1	T35
★ 15	Bearing 3	1	
★ 16	Bearing 4	1	T35
★ 17	Wear ring	2	
★ 18	Piston support	4	
★ 19	Thrust plate	1	
21	Position indicator	1	
23	Slit cover	1	
★ 24	Piston packing	2	
★ 25	O-ring (Upper Side)	1	
★ 26	O-ring (Lower Side)	1	
★ 27	Cover packing	2	
★ 29	O-ring (base plate)	1	
★ 30	Connecting pin	1	
★ 31	Plug	1	
32	Parallel pin	2	
★ 34	C-retainer (lower shaft)	1	T85～T750
35	C-retainer (piston)	2	T85～T750
36	Bearing housing	1	T750
46	Spring washer (cover 1,2)	8	
47	Hexagon bolt (cover: double-acting)	8	
49	Hexagon bolt (base plate)	4	T35:2pcs
50	Spring washer (base plate)	4	T35:2pcs
51	Hexagon stop screw	1	
52	Hexagon stop screw	1	
53	Hexagon socket set screw (open-side)	1	
54	Hexagon socket set screw (close-side)	1	
55	Spring washer (close-side stopper)	1	
★ 60	Sealing washer	1	

Note: Recommended maintenance parts are indicated by "★" before the part number.
To order a set of recommended maintenance parts, please specify "O-ring set".

New T-DYNAMO Expanded view of component T85S to T750S(single-acting type)

Note: The parts numbers marked with □ indicate “O-ring set”.
Please exchange all the parts included in the set.

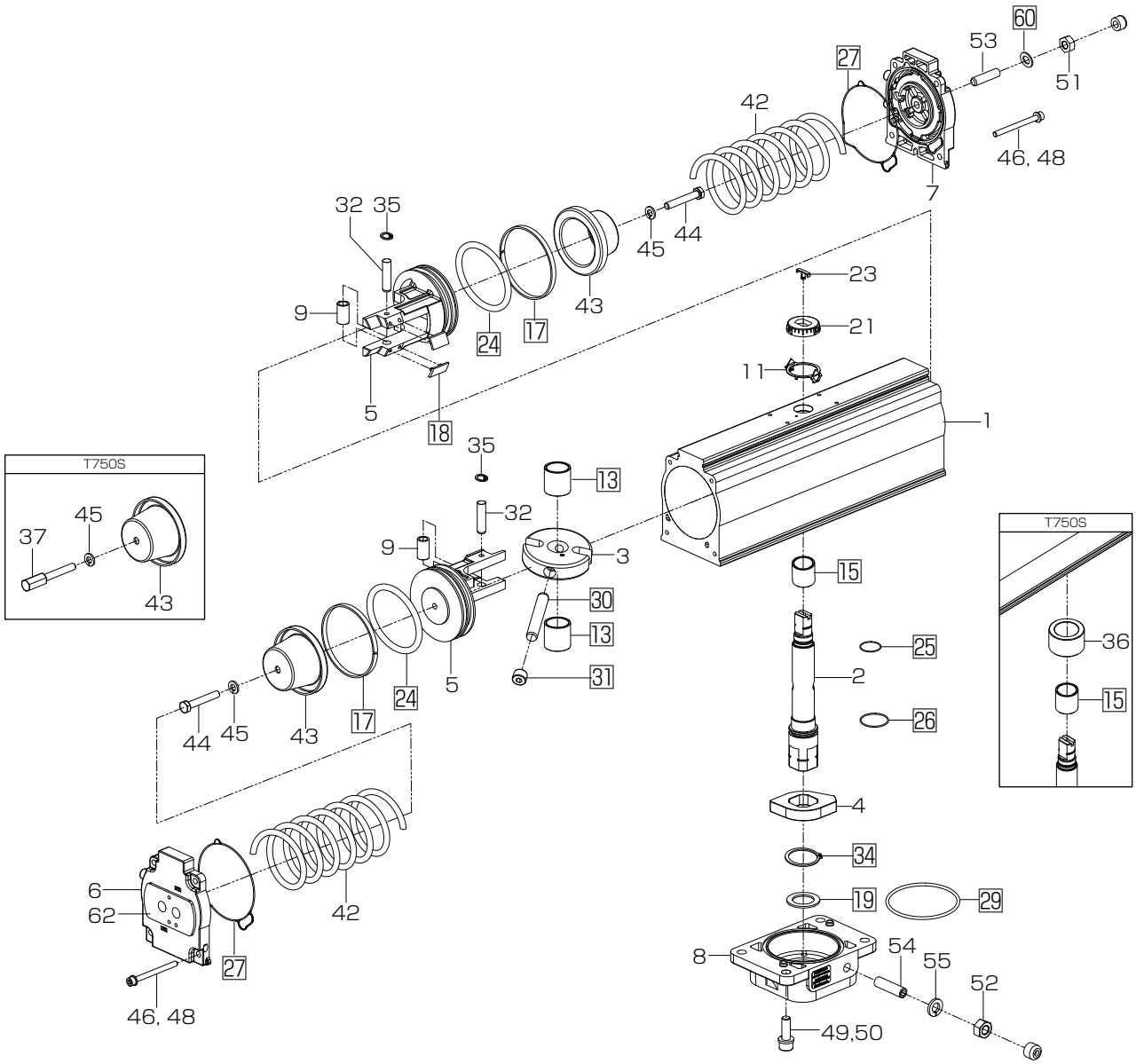

New T-DYNAMO Expanded view of component T85S to T750S(single-acting type)

■Single-acting type

No.	Description	Q'ty	Remarks
1	Case	1	
2	Shaft	1	
3	Yoke	1	
4	Stopper	1	
5	Piston	2	
6	Cover 1	1	
7	Cover 2	1	
8	Base plate	1	
9	Bearing	2	
11	Indicator plate	1	
★ 13	Bearing 1 (shaft-piston)	2	
★ 15	Bearing 3 (lower shaft)	1	
★ 17	Wear ring	2	
★ 18	Piston support	4	
★ 19	Thrust plate	1	
21	Position indicator	1	
23	Slit cover	1	
★ 24	Piston packing	2	
★ 25	O-ring (upper)	1	
★ 26	O-ring (lower)	1	
★ 27	Cover packing	2	
★ 29	O-ring (base plate)	1	
★ 30	Connecting pin	1	
★ 31	Plug	1	
32	Parallel pin	2	
★ 34	C-retainer (lower shaft)	1	
35	C-retainer (piston)	2	
36	Bearing housing	1	T750S
37	Stopper bolt	1	T750S
42	Spring	2	
43	Spring guide	2	
44	Hexagon bolt (spring guide)	2	
45	Spring washer (spring guide)	2	
46	Spring washer (cover 1,2)	8	
48	Hexagon socket bolt (cover 1,2)	8	
49	Hexagon socket bolt (base plate)	4	
50	Spring washer (base plate)	4	
51	Hexagon nut (cover 2)	1	
52	Hexagon nut (base plate)	1	
53	Hexagon socket set screw (cover 2)	1	
54	Hexagon socket set screw (base plate)	1	
55	Spring washer (base plate)	1	
★ 60	Sealing washer (cover 2)	1	
62	Hexagon socket tapered plug (cover 1)	1	

Note: Recommended maintenance parts are indicated by "★" before the part number.
To order a set of recommended maintenance parts, please specify "O-ring set".

New T-DYNAMO Standard Accessory Combination Chart

■Double-action cylinder

This chart indicates the accessories than can be used together in conjunction with the double-action cylinder.
Only those items with a "○" mark in the same column can be used together.

Device name	Standard specifications		Manufacturer	Fig.	Double-acting type													Remarks
Speed controller unit		Unit	Kuroda	SP-K017-Z03-006	○	○	○	○				○	○	○	○				開閉メーターアウト制御
Bypass unit			Kuroda	BP-K095-Z04-002	○	○	○	○	○	○	○	○	○	○	○	○	○	○	
Five-port/2-position non explosion-proof solenoid valve	Direct mounting	Single	Kuroda	PCS2406-K090-Z03-132-***					○							○			Exhaust throttle valve applied to the solenoid valves as a speed controller
		Double	Kuroda	PCD2406-K090-Z04-120-***					○							○			
		Single	SMC	VFN2120N-****-02*					○							○			
		Double	SMC	VFN2220N-****-02*					○							○			
Five-port/2-position explosion-proof solenoid valve		Single	Kaneko	MK15G-8-AE12PU-DMI							◎							◎	
		Double	Kaneko	MK15DG-8-AE12PU-DMI							◎							◎	
Exhaust throttle valve		For solenoid valves	Kuroda	MV-2-Z03-017					○		◎					○		◎	
Explosion-proof/ Non Explosion solenoid valve	Mounted with bracket	Non-standard	Kuroda	PCS2406/2408						◎							◎		
		Non-standard	SMC	VF3130						◎							◎		
		Non-standard	CKD	4F2/4F3/4F4/4F5						◎							◎		
		Non-standard	Kaneko	MOOU, M15G, MB15G, MG15G						◎	◎						◎	◎	
Filter regulator	Direct mounting		Kuroda	P31EA22MMBNNP					○							○			Applicable to Kuroda solenoid valves only
	Mounted with bracket		Kuroda	P31EA22MMBNNP	○	○	○	○		○	○	○	○	○	○		○	○	
			SMC	AW20	○	○	○	○		○	○	○	○	○	○		○	○	
Limit switch	Non-explosion-proof BOX type	Free-angle	Tomoe	TMS-3**-**-**-**-**-*	●				●	●		●				●	●		
	Non-explosion-proof - mounted with bracket	90°	Azbil/OMRON	1LS1-J/WLCA2	●		●		●	●									
			Azbil	VCL-5001	●		●		●	●									
		80°,70°	Azbil/OMRON	1LS1-J/WLCA2	●		●		●	●									
			Azbil	VCL-5001	●		●		●	●									
		Free-angle	Azbil/OMRON	1LS1-J/WLCA2								●		●		●	●		
			Azbil	VCL-5001								●		●		●	●		
	Explosion-proof - mounted with bracket	80°,90°	Azbil	1LX-7001		●		○			○								
			Azbil	VCX-7001		●		○			○								
		70°	Azbil	1LX-7001		●		○			○								
			Azbil	VCX-7001		●		○			○								
		Open/Close detection	Azbil	VCX-7001		●		○			○								
		Free-angle	Azbil	1LX-7001									○		○			○	
			Azbil	VCX-7001									○		○			○	
Proximity switch	Direct mounting	90° only	Efector	IND2004	●	●			●	●									
			OMRON	E2MP-CB1	●	●			●	●									
	Mounted with bracket	90°,80°,70°	OMRON	(M18 shield) E2E-X7D1-N	●		●		●	●									
			OMRON	(M18 non-shield) E2E-X14MD1	●		●		●	●									
			OMRON	(M30 shield) E2E-X10D2-N	●		●		●	●									
		Free-angle	OMRON	(M18 shield) E2E-X7D1-N								●		●		●	●		
			OMRON	(M18 non-shield) E2E-X14MD1								●		●		●	●		
			OMRON	(M30 shield) E2E-X10D2-N								●		●		●	●		
Positioner	Electro-pneumatic		Tomoe(SSS)	TCE2000			○	○						○	○				
			Tomoe(SMC)	TP8100			○	○						○	○				
		Non-standard	Azbil	AVP300			○	○						○	○				
			SSS	XE/XP100-SB7			○	○						○	○				
			SSS	XE/XP100-SS3			○	○						○	○				
	Pneumatic-pneumatic		SMC	IP5100			○	○						○	○				
Manual operating	Manual lever	BOX type	Tomoe		○※1	※2			○※1	○※1	○	○※1	○	○	○	○※1	○※1	○	Manual lever applicable to: T35, T85, T200, T380
		Spanner type	Tomoe		○※1	※2	○	○	○※1	○※1	○	○※1	○	○	○	○※1	○※1	○	
	Side handle																		
	Manual gear				○	○	○	○	○	○	○	○	○	○	○	○	○	○	
Free angle adjuster	15 to 95°											○	○	○	○	○	○	○	

Non-explosion-proof specifications	○		○		○	○		○			○			○	○				
Explosion-proof specifications		○		○			○		○			○						○	
Solenoid valve					○	○	○								○	○	○	○	
Positioner			○	○								○	○						
Free angle adjuster									○	○	○	○	○	○	○	○	○	○	
Side handle																			

○: Usable in combination ●,◎: Only one of the ●/◎ marked items in each column can be used in combination
※1: Only spanner type available with TMS limit switch ※2: Manual lever unavailable with direct-mounted proximity switch

New T-DYNAMO Standard Accessory Combination Chart

■Single-action (spring-open type)

This chart indicates the accessories than can be used together in conjunction with the double-action cylinder.
Only those items with a "○" mark in the same column can be used together.

Device name	Standard specifications		Manufacturer	Fig.	Air to close (spring open)	Remarks
Speed controller unit		Unit	Kuroda	SP-K017-Z12-003-F	○ ○ ○

New T-DYNAMO Standard Accessory Combination Chart

■Single-action (spring-shut type)

This chart indicates the accessories than can be used together in conjunction with the double-action cylinder.
Only those items with a "○" mark in the same column can be used together.

Device name	Standard specifications		Manufacturer	Fig.	Air to open (spring shut)	Remarks
Speed controller unit		Unit	Kuroda	SP-K017-Z03-006	○ ○ ○ ○	
Bypass unit			Kuroda	BP-K095-Z04-002		
Five-port/2-position non explosion-proof solenoid valve	Direct mounting	Single	Kuroda	PCS2406-K090-Z03-132-***	○ ○ ○ ○	Exhaust throttle valve applied to the solenoid valves as a speed controller
		Double	Kuroda	PCD2406-K090-Z04-120-***	○ ○ ○ ○	
		Single	SMC	VFN2120N-****-02*	○ ○ ○ ○	
		Double	SMC	VFN2220N-****-02*	○ ○ ○ ○	
Five-port/2-position explosion-proof solenoid valve		Single	Kaneko	MK15G-8-AE12PU-DMI	◎ ◎ ◎ ◎	
		Double	Kaneko	MK15DG-8-AE12PU-DMI	◎ ◎ ◎ ◎	
Exhaust throttle valve		For solenoid valves	Kuroda	MV-2-Z03-017	○ ◎ ○ ◎ ○ ◎	
Explosion-proof/ Non Explosion solenoid valve	Mounted with bracket	Non-standard	Kuroda	PCS2406/2408	◎ ◎ ◎ ◎	
		Non-standard	SMC	VF3130	◎ ◎ ◎ ◎	
		Non-standard	CKD	4F2/4F3/4F4/4F5	◎ ◎ ◎ ◎	
		Non-standard	Kaneko	MOOU,M15G,MB15G,MG15G	◎ ◎ ◎ ◎ ◎ ◎	
Filter regulator	Direct mounting		Kuroda	P31EA22MMBNNP	○ ○ ○ ○	Applicable to Kuroda solenoid valves only
	Mounted with bracket		Kuroda	P31EA22MMBNNP	○ ○	
			SMC	AW20	○ ○	
Limit switch	Non-explosion-proof BOX type	Free-angle	Tomoe	TMS-3**-**-**-**-**-*	● ●	
	Non-explosion-proof - mounted with bracket	90°	Azbil/OMERON	1LS1-J/WLCA2	● ●	
			Azbil	VCL-5001	● ●	
		80°,70°	Azbil/OMERON	1LS1-J/WLCA2	● ●	
			Azbil	VCL-5001	● ●	
		Free-angle	Azbil/OMERON	1LS1-J/WLCA2	● ●	
			Azbil	VCL-5001	● ●	
	Explosion-proof - mounted with bracket	80°,90°	Azbil	1LX-7001	● ○ ● ○ ● ○ ● ○ ● ○ ● ○ ● ○ ● ○ ● ○ ● ○ ● ○ ● ○ ● ○ ● ○ ● ○ ● ○	
			Azbil	VCX-7001	● ○ ● ○ ● ○ ● ○ ● ○ ● ○ ● ○ ● ○ ● ○ ● ○ ● ○ ● ○ ● ○ ● ○ ● ○ ● ○	
		70°	Azbil	1LX-7001	● ○ ● ○ ● ○ ● ○ ● ○ ● ○ ● ○ ● ○ ● ○ ● ○ ● ○ ● ○ ● ○ ● ○ ● ○ ● ○	
			Azbil	VCX-7001	● ○ ● ○ ● ○ ● ○ ● ○ ● ○ ● ○ ● ○ ● ○ ● ○ ● ○ ● ○ ● ○ ● ○ ● ○ ● ○	
		Open-close detection	Azbil	VCX-7001	● ○ ● ○ ● ○ ● ○ ● ○ ● ○ ● ○ ● ○ ● ○ ● ○ ● ○ ● ○ ● ○ ● ○ ● ○ ● ○	
		Free-angle	Azbil	1LX-7001	○ ○	
			Azbil	VCX-7001	○ ○	
Proximity switch	Direct mounting	90°	Efector	IND2004	● ●	
			OMERON	E2MP-CB1	● ●	
	Mounted with bracket	90°,80°,70°	OMERON	(M18 shield) E2E-X7D1-N	● ●	
			OMERON	(M18 non-shield) E2E-X14MD1	● ●	
			OMERON	(M30 shield) E2E-X10D2-N	● ●	
		Free-angle	OMERON	(M18 shield) E2E-X7D1-N	● ●	
			OMERON	(M18 non-shield) E2E-X14MD1	● ●	
			OMERON	(M30 shield) E2E-X10D2-N	● ●	
Positioner	Electro-pneumatic		Tomoe(SSS)	TCE2000	○ ○	
			Tomoe(SMC)	TP8100	○ ○	
		Non-standard	Azbil	AVP300	○ ○	
			SSS	XE/XP100-SB7	○ ○	
			SSS	XE/XP100-SS3	○ ○	
	Pneumatic-pneumatic		SMC	IP5100	○ ○	
Manual operating	Manual lever				○ ○	
Free angle adjuster	15 to 90°		Tomoe	Attached to side cover	○ ○	Side handle unavailable
	Side handle available		Tomoe	Attached to side cover		
	0 to 94°		Tomoe	External unit (※1)	○ ○	
				Non-explosion-proof specifications	○ ○	
				Explosion-proof specifications	○ ○	
				Solenoid valve	○ ○	
				Positioner	○ ○	
				Stroke adjuster	○ ○	
				Manual gear unit	○ ○	

○: Usable in combination ●,◎: Only one of the ●/◎ marked items in each column can be used in combination
※1: Free-angle adjuster unit is installed in between valve and cylinder

New T-DYNAMO Solenoid valves

■Purpose

The purpose of a solenoid valve is to use electrical signals to remotely change the air flow to operate the valves.

■Standard specifications

Type	Five-port/2-position non explosion-proof solenoid valve (single solenoid)	Five-port/2-position non explosion-proof solenoid valve (double solenoid)	Five-port/2-position explosion-proof solenoid valve (single solenoid)	Five-port/2-position explosion-proof solenoid valve (double solenoid)
Item	PCS2406-K090-Z03-132-✶✶	PCD2406-K090-Z04-120-✶✶	MK15G-8-※-DMI	MK15DG-8-※-DMI
Manufacturer	Kuroda	Kuroda	Kaneko	Kaneko
JIS symbol	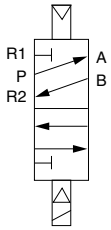	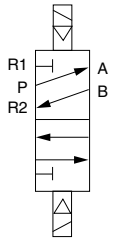	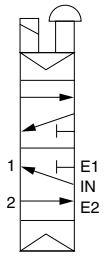	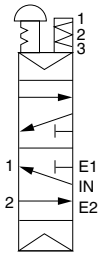
Applicable cylinder type	T35 to T750/T85S to T750S	T35 to T750/T85S to T750S	T35 to T750/T85S to T750S	T35 to T750/T85S to T750S
Mounting method	Direct mounting	Direct mounting	Direct mounting	Direct mounting
Air connection port size	Rc1/4 (IN, EXH)	Rc1/4 (IN, EXH)	Rc1/4 (IN, OUT, EXH)	Rc1/4 (IN, OUT, EXH)
Effective sectional area	10mm^2	10mm^2	20mm^2	20mm^2
Rated voltage	AC100V/110V 50/60Hz AC200V/220V 50/60Hz DC24V	AC100V/110V 50/60Hz AC200V/220V 50/60Hz DC24V	AC100V 50/60Hz AC110V/200V 50Hz AC220V 60Hz DC24, 100, 110, 125V	AC100V 50/60Hz AC100V, 200V 50Hz AC220V 60Hz DC24, 100, 110,125V
Class of insulation	—	—	d2G4	d2G4
Wiring method	Conduit terminal	Conduit terminal	Conduit terminal	Conduit terminal
Conduit entry	G1/2	G1/2	G1/2	G1/2
Manual operating	Non lock bush type	Non lock bush type	Manual botton lock type	Manual botton lock type
Operating temperature	—5 to 50 degrees C	—5 to 50 degrees C	—20 to 60 degrees C	—20 to 60 degrees C
Weight	0.2kg	0.27kg	1.2kg	1.7kg

Remark: The above are standard TOMOE-compatible solenoid valves. It is also possible to install solenoid valves other that those listed above such as a double solenoid or 3-port solenoid valve. For details, please consult us.

New T-DYNAMO Filter regulators(Pressure reducer with filter)

■Purpose

Filter regulators are used to eliminate oil, water, and dust from the operating air in order to protect pneumatic accessories (solenoid valve and cylinder, etc.) and to keep operating pressure at an adequate and constant level (about 4 to 5 K).

■Standard specifications

Type	P31EA22MMBNNP
Manufacturer	Kuroda
JIS symbol	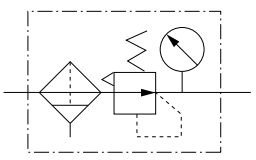
Applicable cylinder type	T35 to T750/T85S to T750S
Set pressure range	0.03 to 0.85MPa
Pressure gauge connection port	Rc1/8
Operating temperature	—5 to 60 degrees C
Air connection port size	Rc1/4
Filtration	5μm
Attachment	Direct mounting
Option	—
Weight	0.19kg

Remark: The above are standard TOMOE-compatible filter regulators.
It is also possible to install filter regulators other that those listed above.
For details, please consult us.

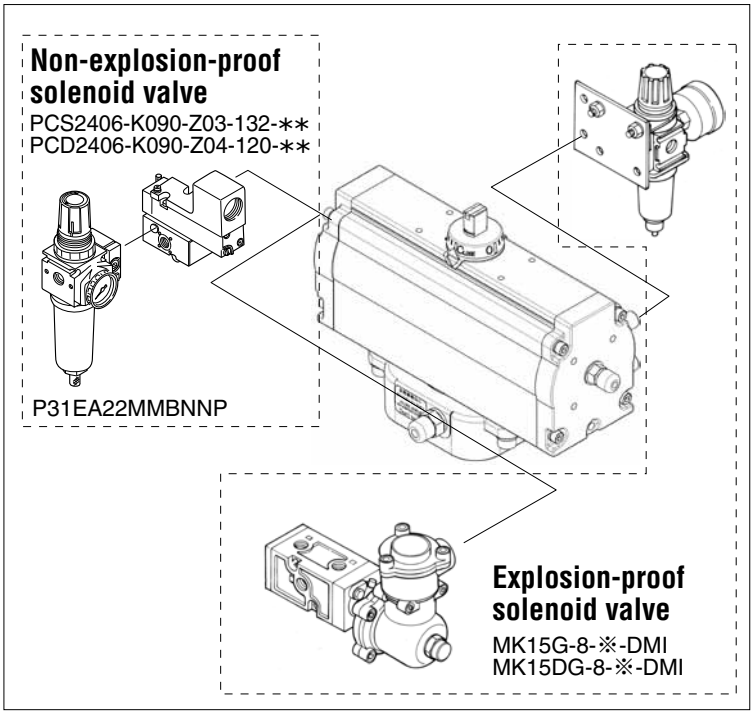

New T-DYNAMO Limit switches

■Purpose

Limit switches are used to convert the valve position (full close, full open, half open) into electric signals for lamp indication at a remote location.

■Standard specifications

Type	TMS-BOX	1LS1-J WLCA2	1LX-7001	VCX-7003
Manufacturer	Tomoe	Azbil (1LS1-J) OMRON (WLCA2)	Azbil	Azbil
Circuit	Monopolar double-throw (1C, SPDT) X2 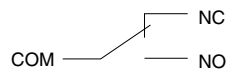	Bipolar double interruption (1A1B, DPDT) 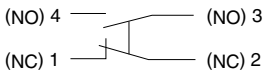	Bipolar double interruption (1A1B, DPDT) 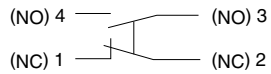	Monopolar double-throw (1C, SPDT) X2 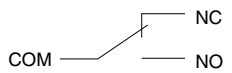
Actuator	Hinge roller lever type	Roller lever type	Roller lever type	Adjustable roller lever type
Class of insulation	IP67 (Option: ExdⅡBT6)	IP67	IP67, Exde ⅡC T6	IP67, Exde ⅡC T6
Rated voltage	AC250V-16A DC125V-0.6A	AC125V-10A AC250V-10A AC480V-10A DC125V-0.8A DC250V-0.4A	AC125V-5A AC250V-5A DC125V-0.8A DC250V-0.4A	AC250V-5A DC125V-0.8A DC250V-0.4A
Operating temperature	−10 to 80 degrees C	−10 to 80 degrees C	−10 to 60 degrees C	−10 to 60 degrees C
Conduit entry	2-G1/2	G1/2	G1/2	G3/4
Option	—	Heat, cold and corrosion resistant	Hydrogen anti-explosion (1LX5701)	Waterproof (VCL-5003)
Contacts	Switch detection with one (2 switches inside)	On or off detection with one Two for both on and off detection	On or off detection with one Two for both on and off detection	Switch detection with one (2 switches inside)
Weight	0.98kg	0.28kg	0.74kg	0.77kg

Remark: The above are standard TOMOE-compatible limit switches. It is also possible to install limit switches other that those listed above. For details, please consult us.

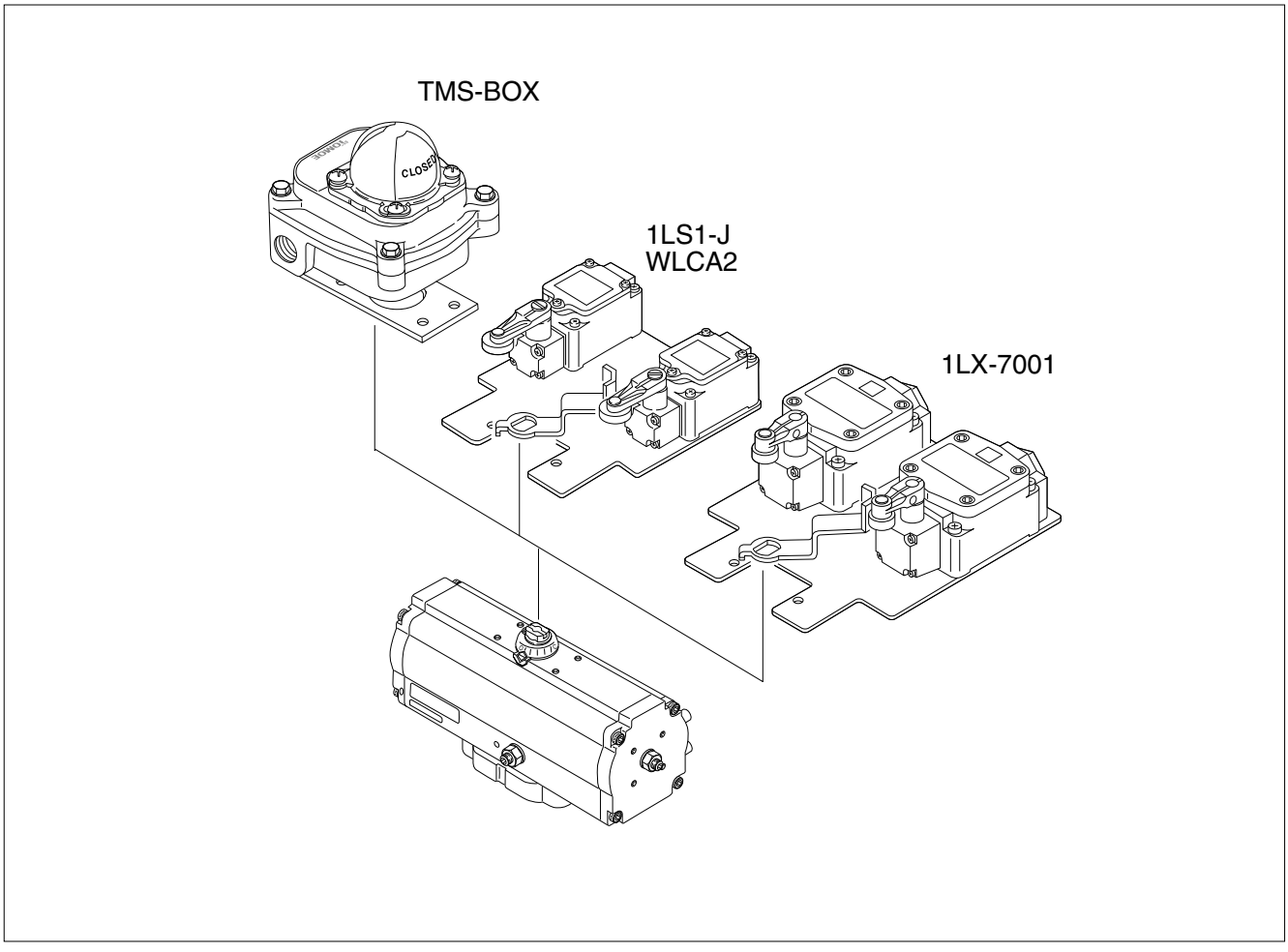

New T-DYNAMO Proximity switches

■Purpose

Proximity switches are used to convert the valve position (full close, full open, half open) into electric signals for lamp indication at a remote location.

■Standard specifications

Product	M18 shielded type (Can be embedded in metal.)	Direct-mounting proximity switch
Type	E2E-X7D1-N	IND2004DARKG
Manufacturer	OMRON	efector
With power source	DC 2-wire system	DC 2-wire system
Motion mode	NO	NO
Detecting distance	0 to 5.6mm	4mm±10%
Object to be detected	Magnetic metal (stainless steel possible)	Dedicated target
Power source voltage	DC12 to 24V	DC10 to 36V
Current consumption	3 to 100mA	min 4mA
Class of insulation	IP67	IP67
Operating temperature	−25 to 70 degrees C	−25 to 80 degrees C
Connection	Cord draw type (2m)	Cord draw type (2m)
Contacts	On or off detection with one Two for both on and off detection	2-point switch detection possible with a single unit
Weight	0.43 kg (including mounting plate): 1 piece	0.23 kg (including mounting plate): 1 piece

Remark: The above are standard TOMOE-compatible proximity switches. It is also possible to install limit switches other that those listed above such as a DC 3-wire, AC 2-wire, AC/DC 2-wire or connector-type proximity switch. For details, please consult us.

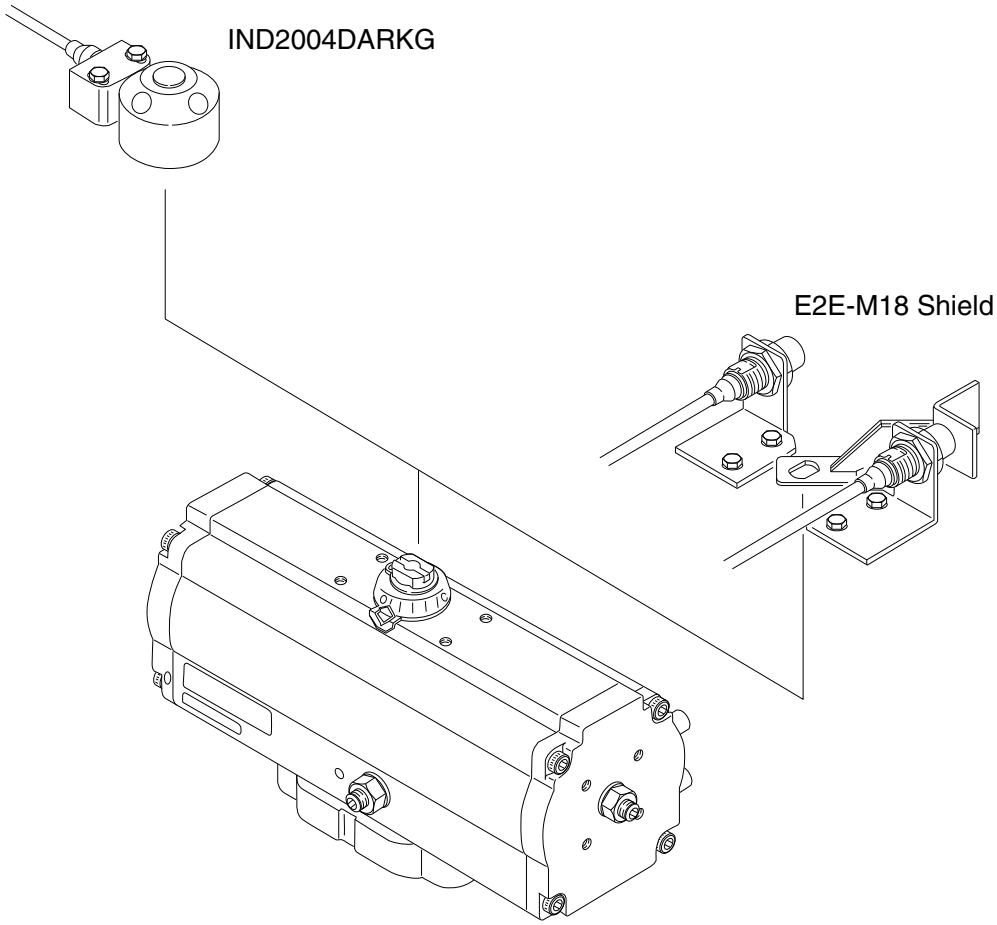

New T-DYNAMO Positioners

■Purpose

A positioners are used for quick and accurate control of the valve opening angle with pneumatic signals or 4-20mA DC input signals from a control room or controller unit.

■Standard specifications

	Electro-Pneumatic, analog	Electro-Pneumatic, analog	Pneumatic-Pneumatic
Type	TCE2000	TP8100	IP5100
Manufacturer	Tomoe	Tomoe	SMC
Input signal	4 to 20mA	4 to 20mA	0.02 to 0.1MPa
Resistance	250Ω (4 to 20mADC)	235±15Ω (4 to 20mADC)	—
Supply air	0.14 to 0.7MPa	0.14 to 0.7MPa	0.14 to 0.7MPa
Output flow rate	180L/min. or more (SUP=0.4MPa)	200L/min. or more (SUP=0.4MPa)	200L/min. or more (SUP=0.4MPa)
Air consumption	Within 11L/min. (SUP=0.4MPa)	Within 11L/min. (SUP=0.4MPa)	Within 11L/min. (SUP=0.4MPa)
Operating temperature	−20 to 83 degrees C (Non explosion-proof) −20 to 60degrees C (Explosion-proof type d2G4)	−20 to 8 degrees C (Non explosion-proof) −20 to 60 degrees C (Explosion-proof type d2G4)	−20 to 80 degrees C
Class of insulation	IP65, ExdⅡBT6X	IP65, ExdⅡBT5	—
Air connection port size	Rc1/4	Rc1/4	Rc1/4
Conduit entry	2-G1/2	2-G1/2	—
Sensitivity	Within 0.5%FS	Within 0.5%FS	Within 0.5%FS
Repeatability	Within ±1.5%FS	Within ±2%FS	Within ±2%FS
Hysterisis	Within 1%FS	Within 1%FS	Within 1%FS
Option	—	—	—
Weight	2.3kg	2.6kg	1.2kg

Remark: The above are standard TOMOE-compatible positioners. It is also possible to install positioners other that those listed above. For details, please consult us.

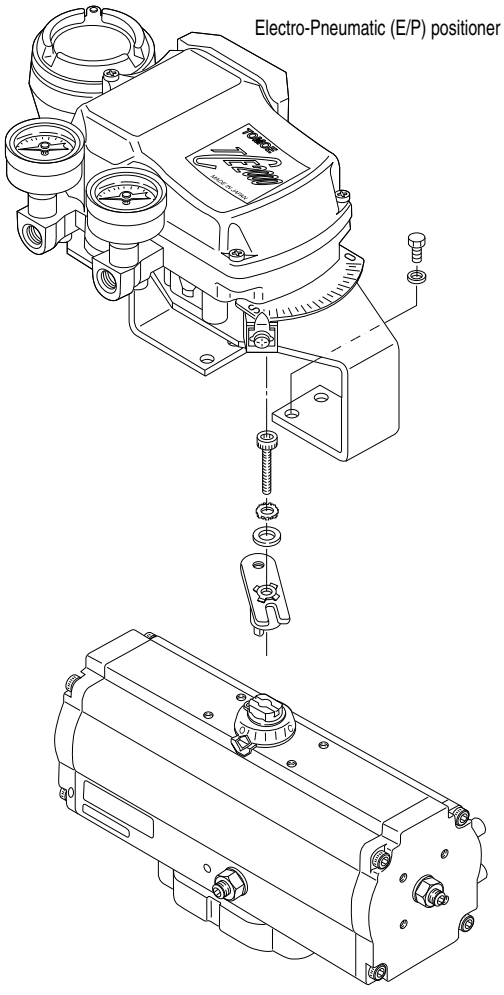

Electro-Pneumatic (E/P) positioner

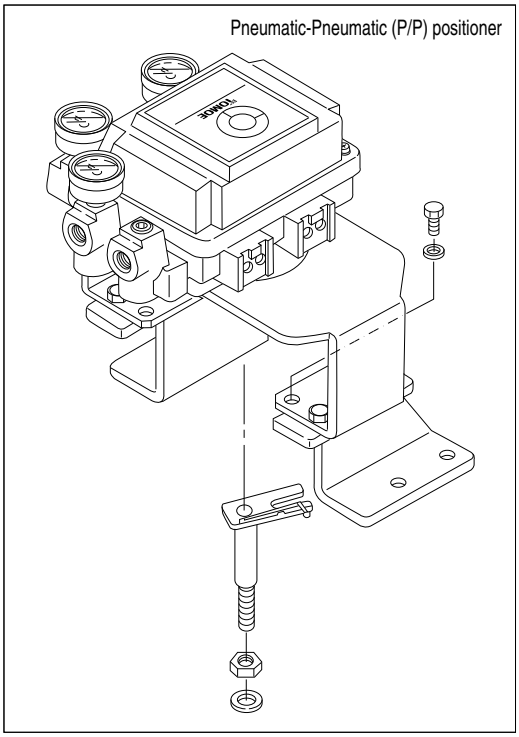

Pneumatic-Pneumatic (P/P) positioner

New T-DYNAMO Manual operation unit

■Purpose

The operation unit is for manual operation of the pneumatic cylinder when air supply fails.

■Standard specifications

	Function	Type	Applicable cylinder	Remarks
1	Manual lever	Lever	T35, T85, T200, T380 (Double-acting)	(1) Be sure to open the bypass valve. (2) Never use for any single acting type cylinder.
2	Side handle	Screw handle	T85S, T200S, T380S, T750S (Single-acting)	(1) Restore the valve angle in the position air supply shutted off when restarting the automatic operation.
3	Manual gear unit	Worm gear	T200, T380, T750 (Double-acting)	(1) Restore the valve angle in the position air supply shutted off when restarting the automatic operation.

※Do not input signal to the solenoid valve or positioner during operation.

Manual lever

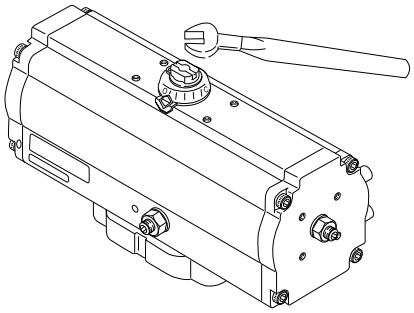

Side handle

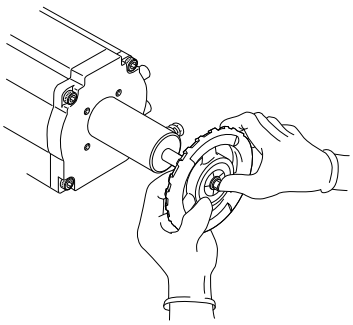

Manual gear unit

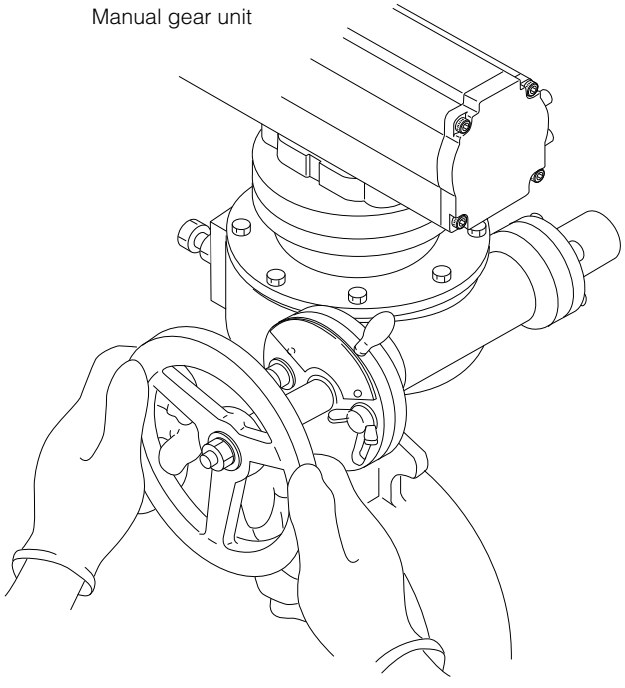

New T-DYNAMO Free-angle adjuster

■Purpose

Free-angle adjuster enables to set open/close angle depending on users' demand.

■Standard specifications

Function	Type	Applicable cylinder	Remarks
Free-angle adjuster	Side adjust screw	T35 to T750/T85S to T750S (Air to open)	Remove the cylinder cover, loosen the lock nut and insert the bolt to adjust the stroke angle. Tighten the lock nut and attach the cylinder cover in position.

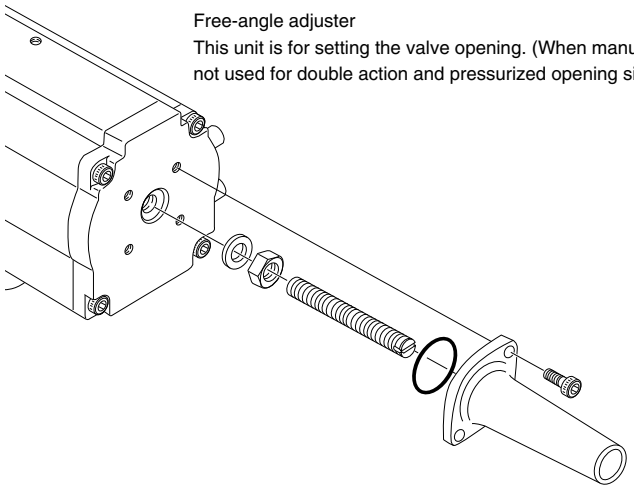

Free-angle adjuster
This unit is for setting the valve opening. (When manual operation unit is not used for double action and pressurized opening single action.)

New T-DYNAMO Speed controllers

■Purpose

For double-acting cylinders, the speed controller is used as meter out (exhaust throttle) and for single-acting cylinders, it is used as meter in (suction throttle).

■Standard specifications

Type	MV-2-Z03-017	SP-K017-Z03-006
Manufacturer	Kuroda	Kuroda
JIS symbol	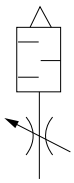	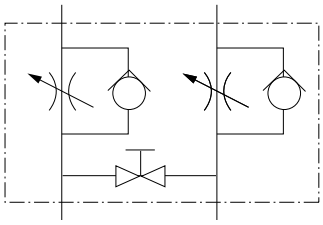
Applicable cylinder type	With PCS 2406-K090-Z132 solenoid valve mounted	Other than indicated at left
Option	With silencer	With bypass valve
Needle revolution	10 rotations	11 rotations
Adjustable range	5 to 15 secs.	5 to 15 secs.
Air connection port size	—	Rc1/4
Attachement	Screw into solenoid valve exhaust port (Rc 3/8)	Install to cylinder
Weight	0.06kg	0.6kg

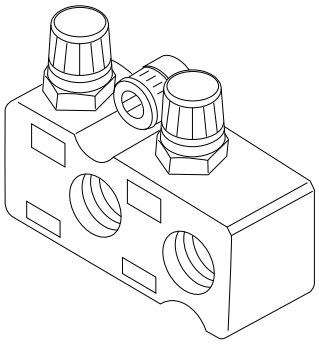

Remark: The above are standard TOMOE-compatible speed controllers. It is also possible to install speed controllers other that those listed above. For details, please consult us.

New T-DYNAMO Silencers

■Purpose

Silencers eliminate noise at the exhaust ports on various kinds of pneumatic accessories.

■Standard specifications

Type	AN103-KM6	AN20-02
Manufacturer	SMC	SMC
JIS symbol		
Applicable cylinder type	T35 to T750/T85S to T750S	T35 to T750/T85S to T750S
Effect of muffing	25dB (A)	30dB (A)
Operating temperature	5 to 60 degrees C	5 to 60 degrees C
Port size	ϕ6	Rc1/4
Attachement	Install to exhaust port together with one-touch pipe coupler.	Screw into exhaust port.
Weigh	0.02kg	0.02kg

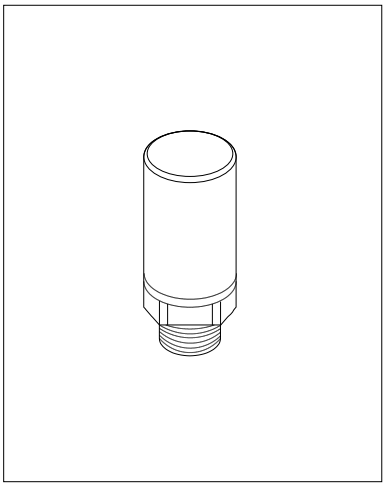

Remark: The above are standard TOMOE-compatible silencers. It is also possible to install silencers other that those listed above. For details, please consult us.

New T-DYNAMO Lock-up valves

■Purpose

When air supply fails, the lock-up valve automatically stops the line until pressure is restored and keeps the operating unit of the cylinder at the stay-put position.

■Standard specifications

Type	IL211-02	IL201-02
Manufacturer	SMC	SMC
JIS symbol	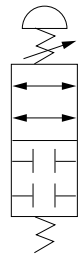	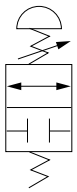
Applicable cylinder type	T35 to T750	T85S to T750S
Effective sectional area	17mm^2	17mm^2
Operating temperature	—5 to 60 degrees C	—5 to 60 degrees C
Air connection port size	Rc1/4	Rc1/4
Signal pressure connection port	Rc1/4	Rc1/4
Weight	0.64kg	0.43kg

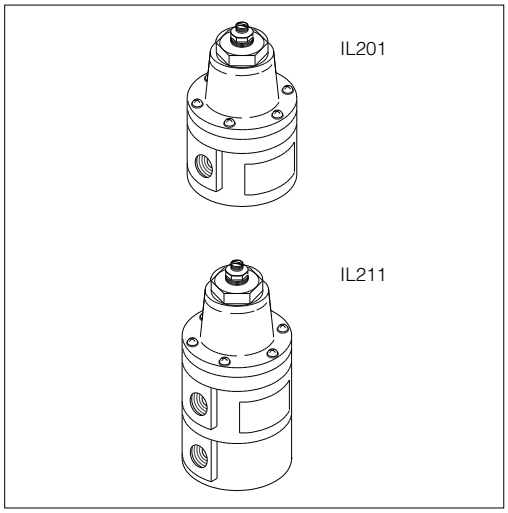

Remark: The above are standard TOMOE-compatible lock-up valves. It is also possible to install lock-up valves other that those listed above. For details, please consult us.

New T-DYNAMO Examples of standard air circuits for pneumatic actuators

Standard and semi-standard accessories and their use
Example of standard air circuit for on/off operation (double-acting type)

Shown below are standard circuits to open and close a butterfly valve driven by a double-acting air cylinder while transmitting electrical signals from a remote control room. Switching of the flow of operation air is performed by the solenoid valve, and detection of the open/close position of the valve is performed by a limit switch, with feedback of the electrical signals to the control room.

1 Butterfly valve opens when solenoid valve is energized.

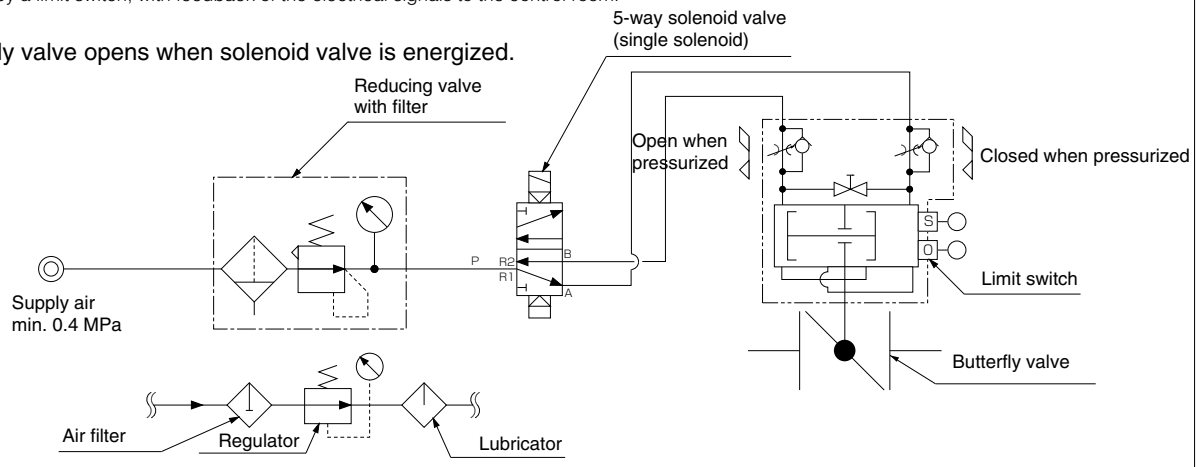

2 Butterfly valve closes when solenoid valve is energized.

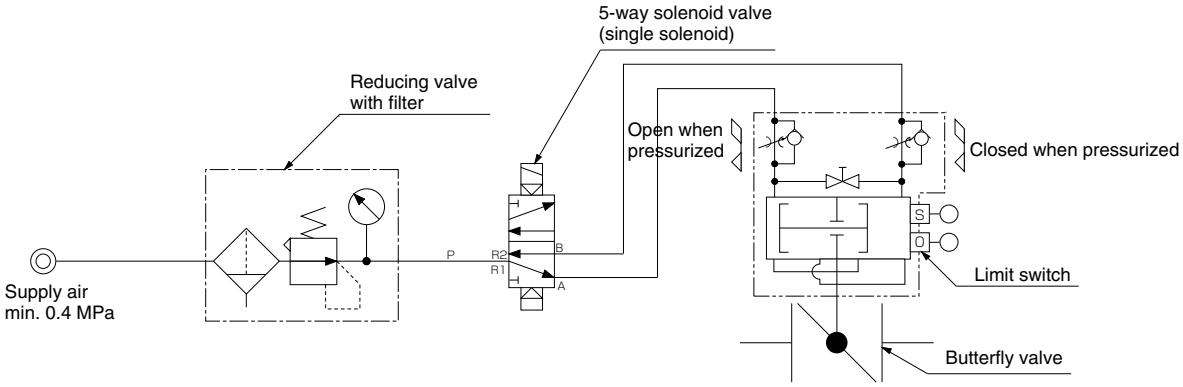

3 Butterfly valve closes when SOL.1 is energized.
Butterfly valve opens when SOL.2 is energized.

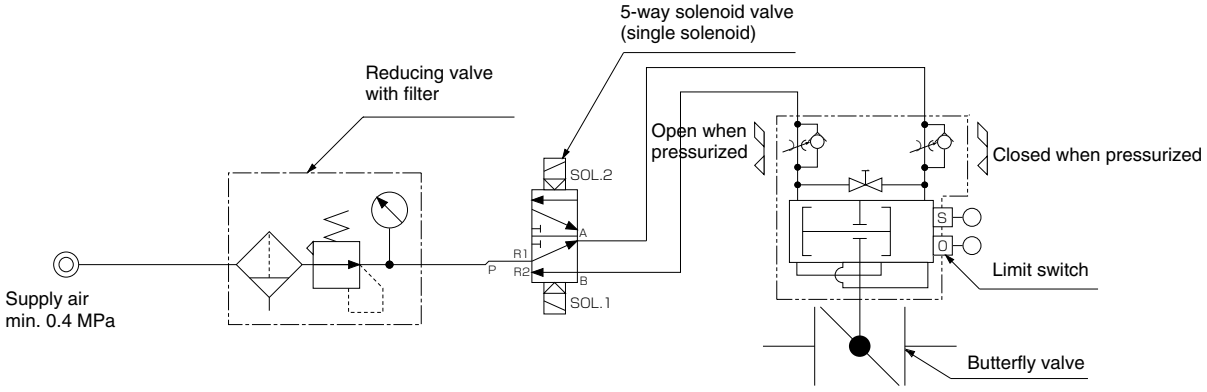

→Once SOL.1 is energized, the condition is maintained even after it is de-energized unless SOL.2 is energized.

Example of standard air circuit for control operation (double-acting type)

Shown below are examples of standard circuits in which a P/P or E/P positioner is attached to the butterfly valve driven by a double-acting pneumatic cylinder to give instruction signals from a remote control room to the positioner. This adjusts the valve opening exactly and quickly in proportion to the signals, and also detects the open/close position of the valve by a limit switch which sends feedback of the electrical signals to the control room.

4 Direct action
Butterfly valve closes when signal increases.
Butterfly valve opens when signal decreases.

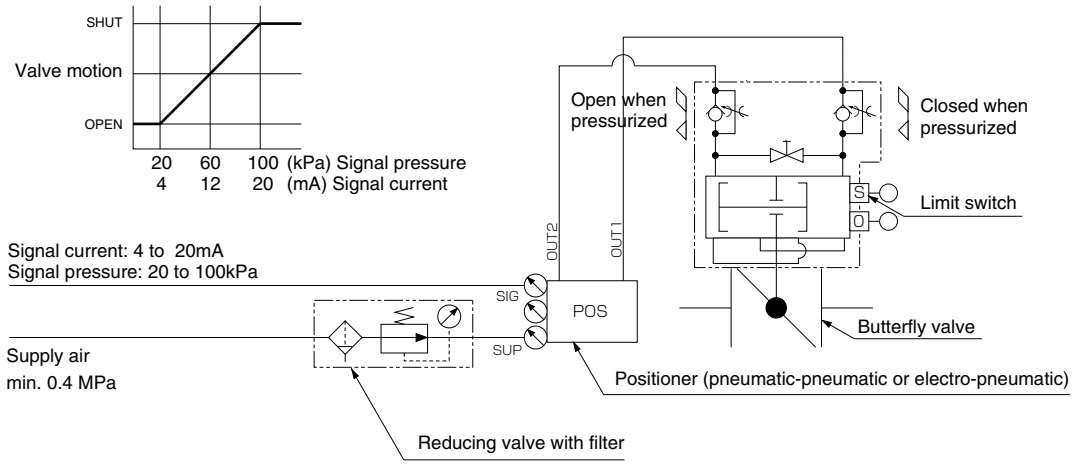

→The butterfly valve opens fully when the input signal goes off under a state of assured air supply.

5 Reverse action
Butterfly valve opens when signal increases.
Butterfly valve closes when signal decreases.

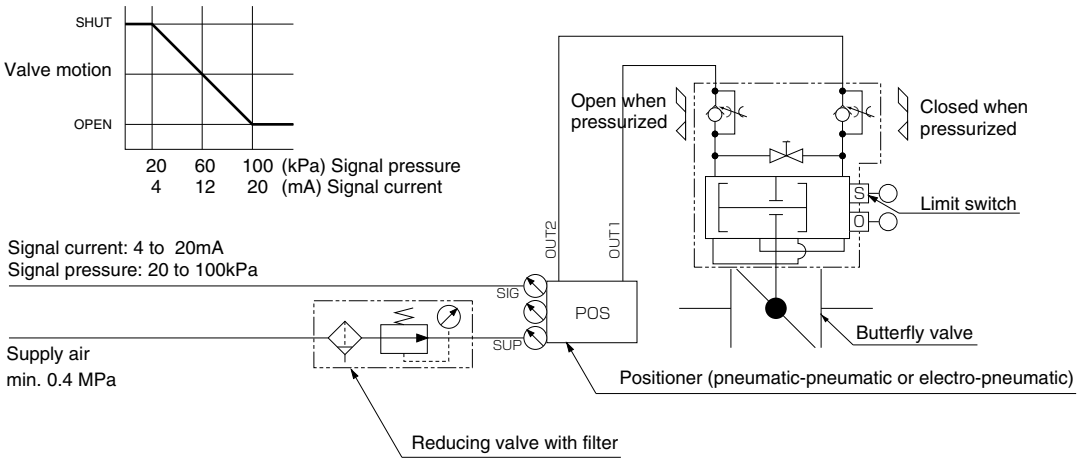

→The butterfly valve closes fully when input signal goes off under a state of assured air supply.

Actuator
New ELMY 4I
New MICOM ELMY II 4I
PMK-SRF 4K
SRJ 4J
LTKD 4L
New T-DYNAMO 7E/7F/7G
TGA 3A
TG-S 3K/3U
3C
Diaphragm 6X/6W/6Z/6A/6B
Hydraulic cylinder 3H
Manual Actuators 1T/1J/2U/2I/2S/2G/2R

New T-DYNAMO Example of standard air circuits for pneumatic actuators

Example of standard air circuit for on/off operation (single-acting type)

Shown below are examples of standard circuits to operate the valve automatically to the safe side of open or close when the operating air supply or power supply fails in the middle of operation.

1 Butterfly valve closes when air supply falls.
(Opened by pressure when solenoid valve is energized.)
Butterfly valve closes when power supply falls.
(Opened by pressure when solenoid valve is energized.)

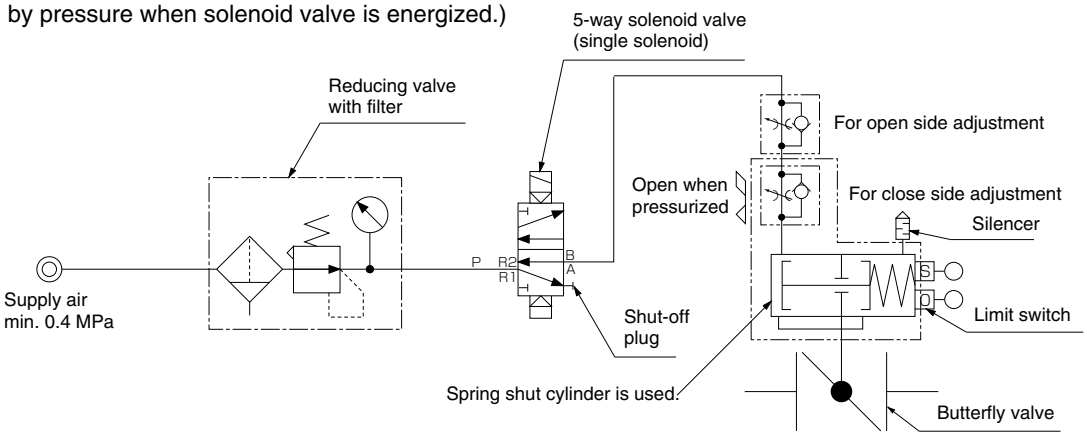

2 Butterfly valve opens when power supply falls.
(Closed by pressure when solenoid valve is energized.)
Butterfly valve opens when air supply falls.
(Closed by pressure when solenoid valve is energized.)

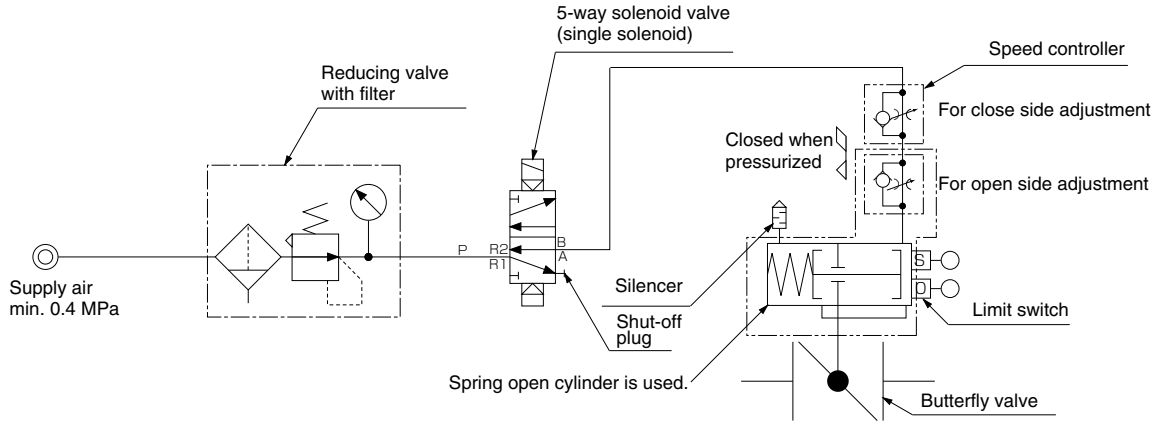

Example of standard air circuit for control operation (single-acting type)

Shown below are examples of standard circuits in which the P/P or E/P positioner is attached to the butterfly valve driven by a single-acting pneumatic cylinder to adjust valve opening exactly and quickly in proportion to the signals transmitted by a local controller or from a remote control room. This will also detect the open/close position of the valve by a limit switch which sends feedback of the electric signals to the control room. When the operating air supply or power supply fails, the valve is automatically operated to the safe side of open or close.

3 Direct action
Butterfly valve closes when signal increases.
Butterfly valve opens when signal decreases.

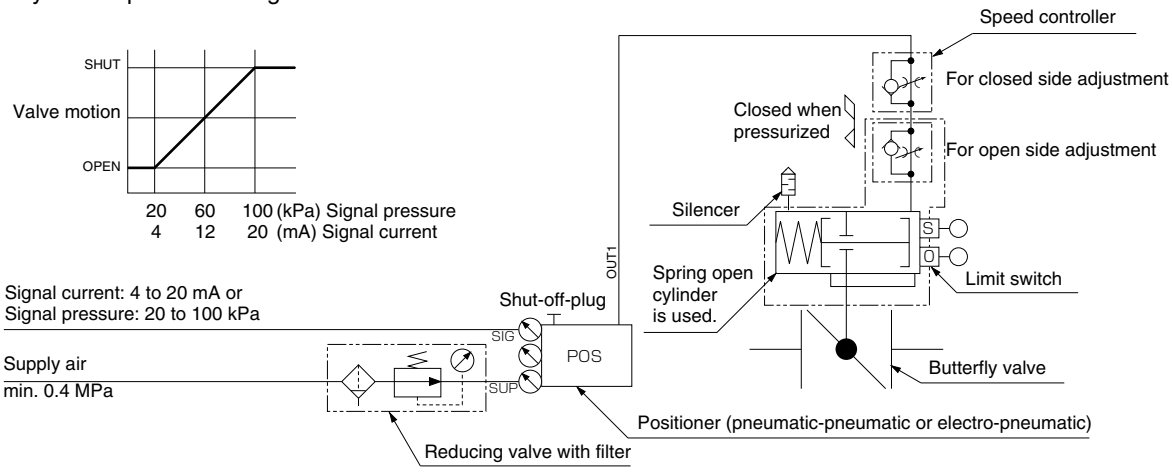

→Butterfly valve opens when air supply fails.

4 Reverse action
Butterfly valve opens when signal increases.
Butterfly valve closes when signal decreases.

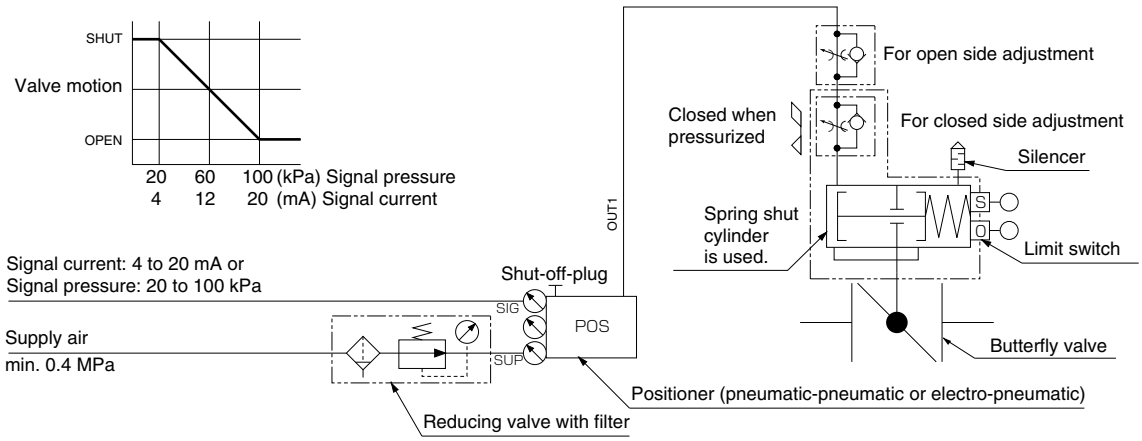

→Butterfly valve closes when air supply fails.

TGA

The TGA model is a double-action pneumatic actuator perfect for on/off control of the various types of butterfly valves. With an optional positioner, it can also be used for flow rate control. It mainly used for the medium to large-sized valves of size 350mm or more. The operation principle is that air pressure forces the piston inside the cylinder into a linear reciprocating motion, causing the trunnion coupled to the rod to drive the arm and rotate the output shaft.

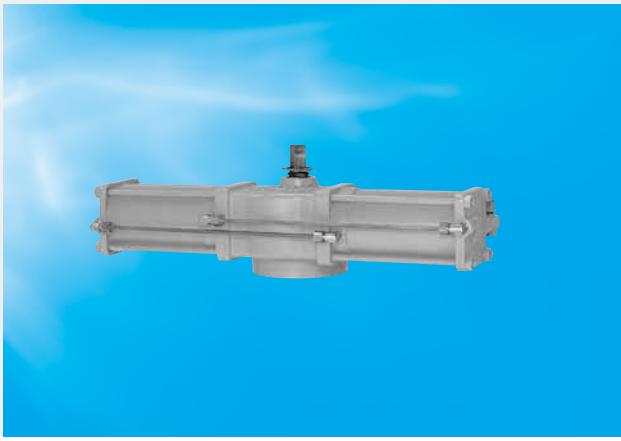

TGA Specifications							
	TGA-125	TGA-140	TGA-160	TGA-180	TGA-200	TGA-220	TGA-250
Output torque (N·m) (When supply pressure is 0.4 MPa and rotation angle is 0˚ or 90˚)	1069	1510	2274	3194	4339	5976	8619
Supply pressure (MPa)	0.4～0.7※1						
Body shell max (MPa)	1.0						
Rotating angle	0 to +90˚						
Port size	Rc3/8				Rc1/2		
Operating fluid	Dry air						
Ambient temperature / supply air temperature	0 to 80 degree C※2						
Rotating speed range (sec.)	5 to 15						
Coating	Epoxy primer finish (Munsell N7)						

※1 If used for the TRITEC(TT1, TT2) with over 0.5MPa supply pressure, and forecasting over 10,000 times operation. Please ask us about cylinder specifications.
※2 Please ask us when used at working temperature of more than 60 degree C.

TGA Outer Dimensions

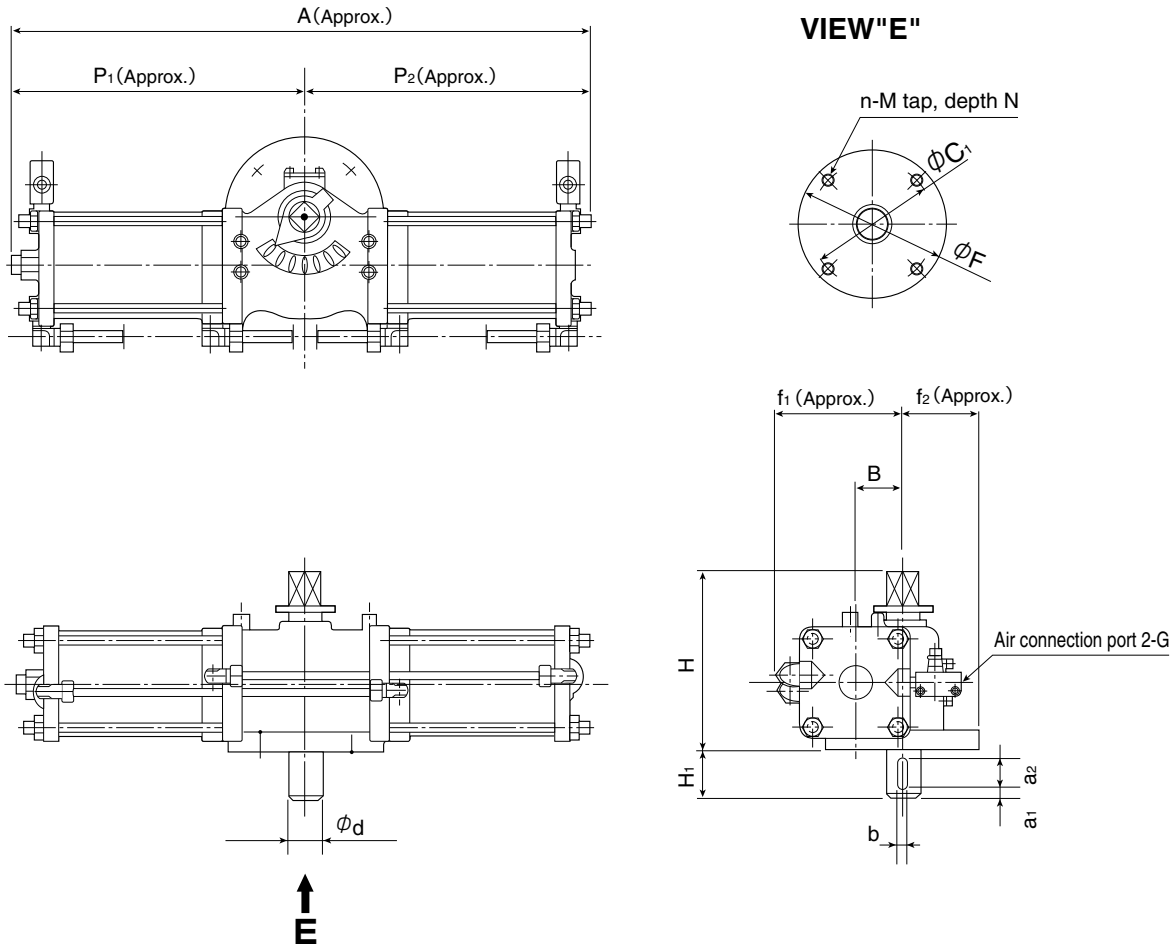

TGA Dimensions

Type	Dimension (mm)																	Approx. Mass (kg)
	A	P1	P2	f1	f2	B	H	H1	ϕd	b	a1	a2	ϕF	C1	n	M	N	G	
TGA-125	743	381	362	164	100	62	234	45	40	12	2	40	200	170	4	M16	20	Rc3/8	32
TGA-140	810	417	393	180	100	70	282	60	45	12	2	55	200	170	4	M16	20	Rc3/8	45
TGA-160	939	483	456	202	130	80	310	61	60	15	2	55	260	220	4	M20	25	Rc3/8	91
TGA-180	1053	543	510	218	130	90	323	65	65	18	2	60	260	220	4	M20	25	Rc3/8	122
TGA-200	1163	599	564	253	160	100	370	70	75	20	2	65	320	280	8	M20	25	Rc1/2	174
TGA-220	1248	642	606	270	160	110	400	85	75	20	2	80	320	280	8	M20	25	Rc1/2	198
TGA-250	1381	707	674	299	160	125	433	100	75	20	2	95	320	280	8	M20	25	Rc1/2	261

TGA Operation principle

As chambers A1 - A2 and B1 - B2 are connected through copper tubes as shown in the figure at left (single-acting cylinder is provided only with chambers A2 and B1), feeding air into port "S" will generate a thrust to push the piston toward the left. The linear motion of the piston is converted to a clockwise rotary motion of the output shaft through the trunnion. Residual air in chamber B is exhausted through port "O". Feeding air to port "O" causes the reverse of the action described above, rotating the output shaft counter-clockwise.

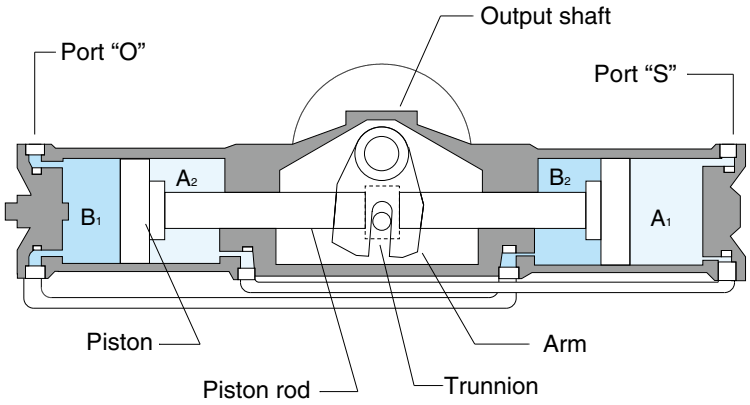

TGA Air consumption

Type	Cylinder capacity (ℓ)	
	A (O→S)	B (S→O)
TGA-125	3.629	3.629
TGA-140	5.113	5.113
TGA-160	7.713	7.713
TGA-180	10.847	10.847
TGA-200	14.730	14.730
TGA-220	20.229	20.229
TGA-250	29.278	29.278

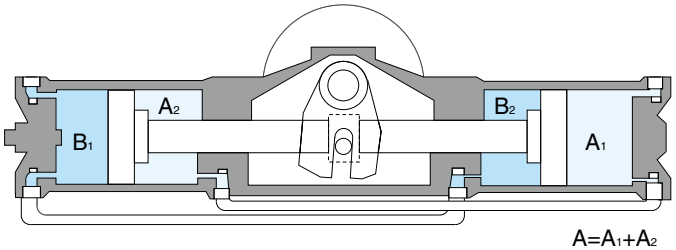

$A=A_1+A_2$
$B=B_1+B_2$

(1) Required air consumption

Double-acting type

$$VD=(A+B)\left(\frac{P-0.1013}{0.1013}\right)N$$

Single-acting type

$$VS=(A \text{ or } B)\left(\frac{P+0.1013}{0.1013}\right)N$$

VD : Double-acting type cylinder air consumption (Nℓ)
VS : Single-acting type cylinder air consumption (Nℓ)
A, B : Cylinder capacity (ℓ)
P : Working pressure (Mpa)
N : Operating frequencies in a given time (1 round trip=1)

(2) Air consumption within a unit time

Double-acting type $CD=\frac{VD}{t}$

Single-acting type $CS=\frac{VS}{t}$

CD : Double-acting type cylinder air consumption (Nℓ/sec)
CS : Single-acting type cylinder air consumption (Nℓ/sec)
t : Unit time (sec)

Remark: The compressor should have a larger capacity than the air consumption calculated above in (1) and (2).

TGA Output Torque Curve

Double-acting type (TGA)

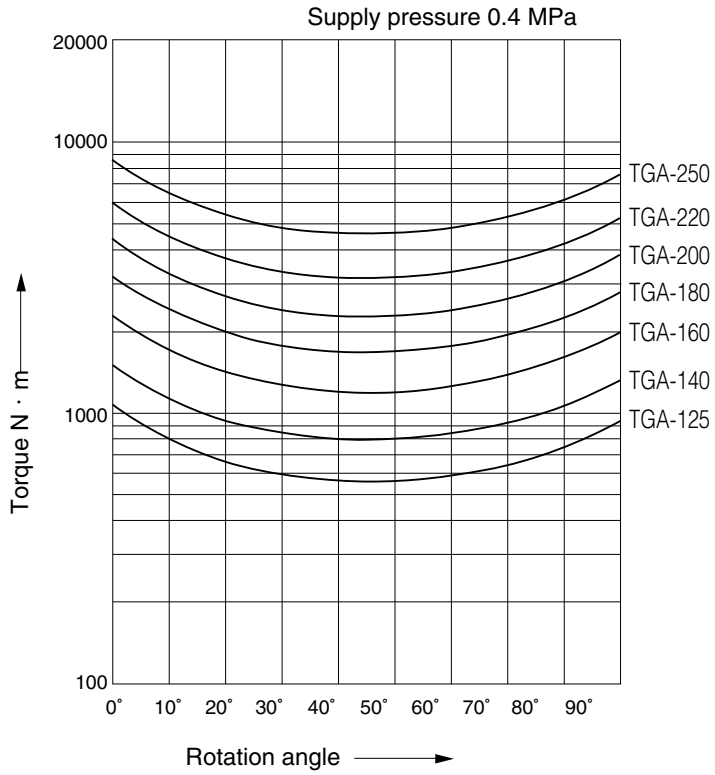

Notes :

- —— Lines show output torque curve by actuator
- The table shows the torque at an operating air pressure of 0.4 Mpa.

TGA Output Torque

Type	Supply pressure (MPa)			
	0.4	0.5	0.6	0.7
TGA-125	1270	1588	1905	2223
TGA-140	1860	2325	2790	3255
TGA-160	2750	3438	4125	4813
TGA-180	3800	4750	5700	6650
TGA-200	5300	6625	7950	9275
TGA-220	7200	9000	10800	12600
TGA-250	12000	15000	18000	21000

TGA Expanded view of component

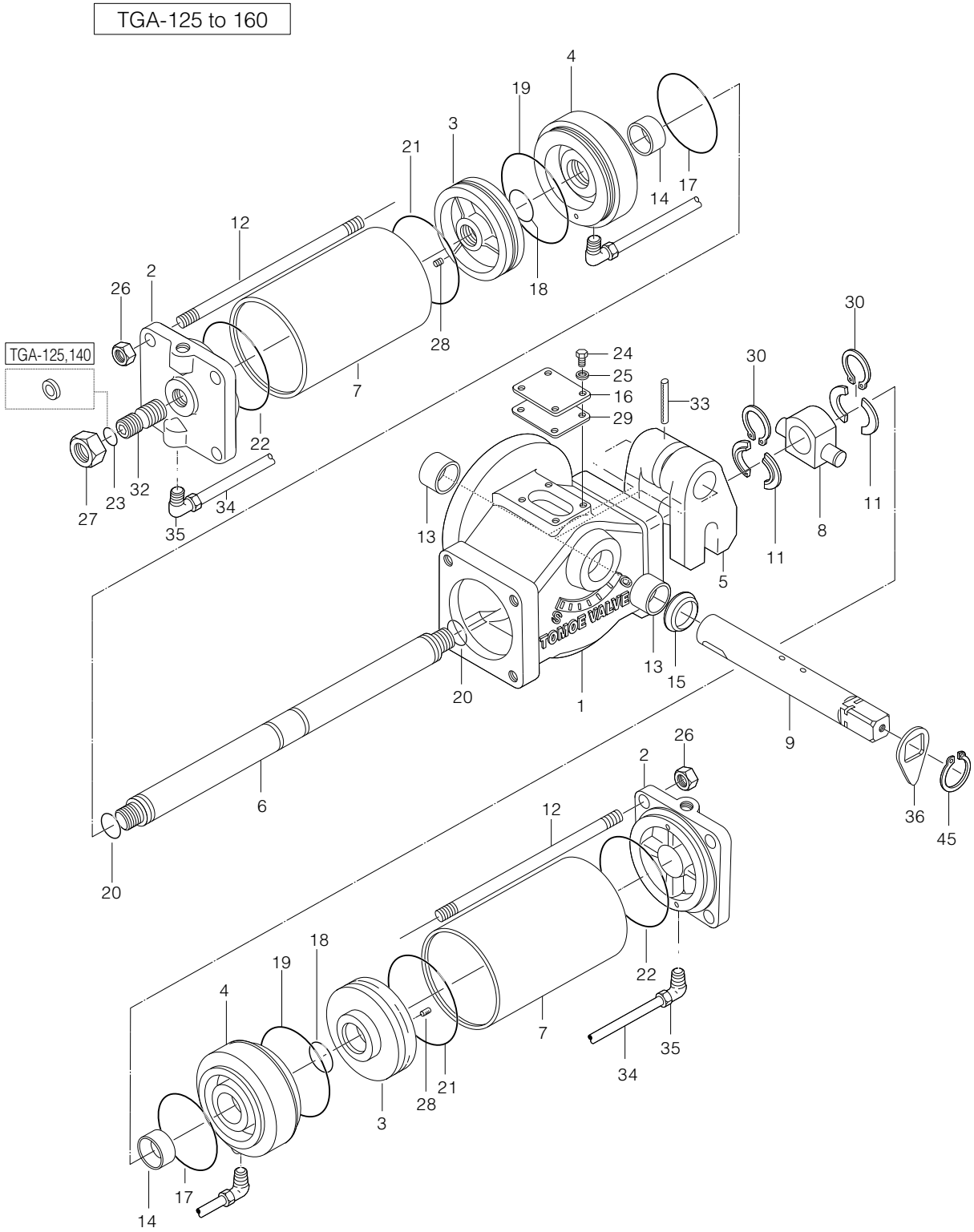

■TGA-125 to 160 parts list (double-acting type)

No.	Description	Q'ty	Remarks
1	Body	1	
2	End cover	2	
3	Piston	2	
4	Rod cover	2	
5	Arm	1	
6	Piston rod	1	
7	Case	2	
8	Trunnion	1	
9	Shaft	1	
11	Rings	Set of 2	
12	Tie rod	8	
13	Bush	2	
14	Bush	2	
★ 15	V-ring	1	
16	Cover	1	
★ 17	O-ring	2	
★ 18	O-ring	2	
★ 19	O-ring	2	
★ 20	O-ring	2	
★ 21	O-ring	2	
★ 22	O-ring	2	
★ 23	Seal washer	1	TGA-125, 140
	O-ring		TGA-160
24	Hexagon bolt	4	
25	Spring washer	4	
26	Hexagon nut	8	
27	Lock nut	1	
28	Screws	2	
29	Gasket	1	
30	C-retainer	2	
32	Stopper bolt	1	
33	Spring pin	2	TGA-125
		4	TGA-140, 160
34	Copper pipe	2	
35	Pipe coupler	4	
36	Indicator	1	
45	C-retainer	1	

Remark: Parts with a "star" before the part number are recommended replacement parts. To order as a set, please specify O-ring set.

TGA Expanded view of component

TGA-180 to 250

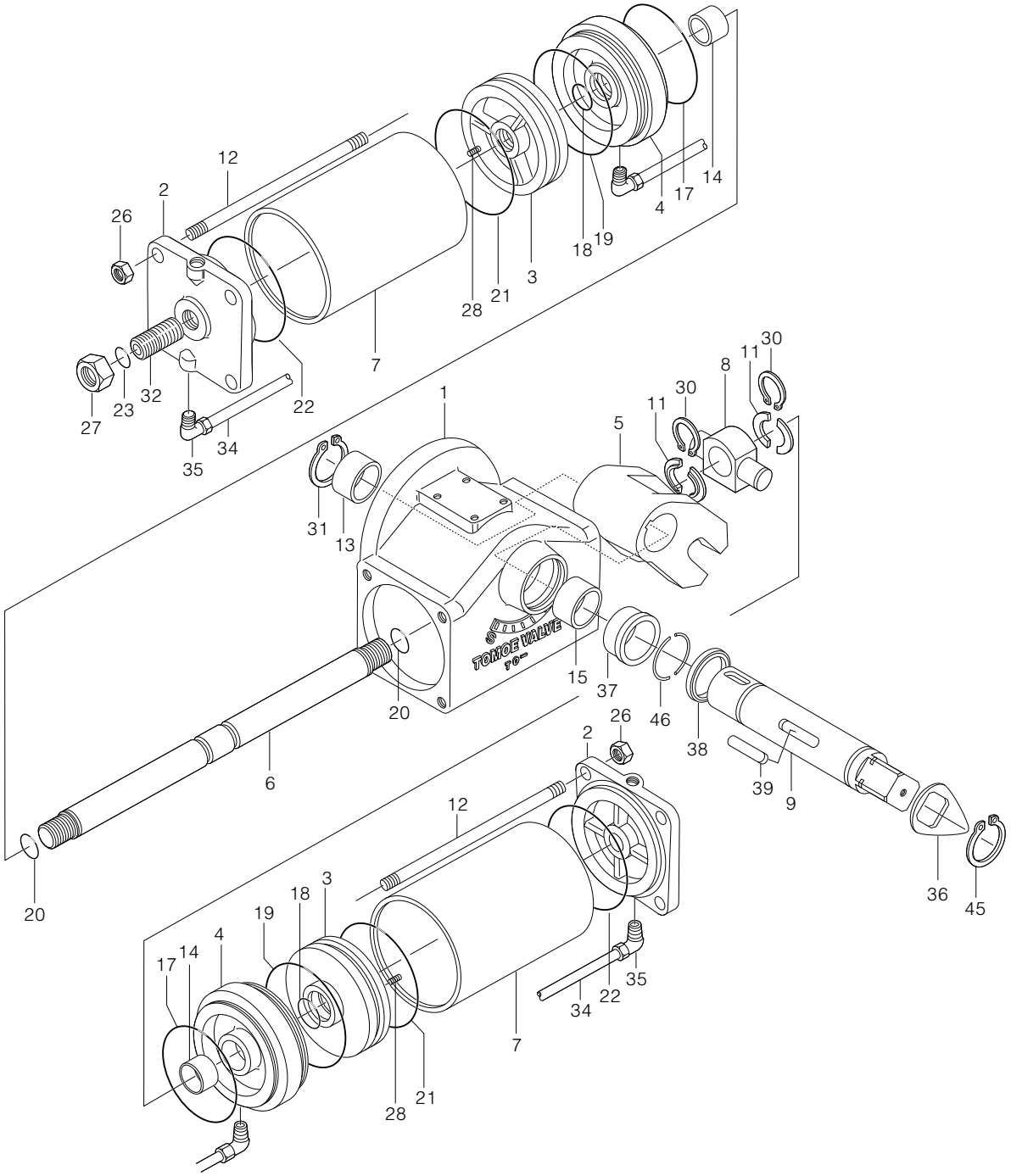

■TGA-180 to 250 parts list (double-acting type)

No.	Description	Q'ty	Remarks
1	Body	1	
2	End cover	2	
3	Piston	2	
4	Rod cover	2	
5	Arm	1	
6	Piston rod	1	
7	Case	2	
8	Trunnion	1	
9	Shaft	1	
11	Rings	Set of 2	
12	Tie rod	8	
13	Bush	1	
14	Bush	2	
15	Bush	1	
★ 17	O-ring	2	
★ 18	O-ring	2	
★ 19	O-ring	2	
★ 20	O-ring	2	
★ 21	O-ring	2	
★ 22	O-ring	2	
★ 23	O-ring	1	
26	Hexagon bolt	8	
27	Lock nut	1	
28	Screws	2	
30	C-retainer	2	
31	C-retainer	1	
32	Stopper bolt	1	
34	Copper pipe	2	
35	Pipe coupler	4	
36	Indicator	1	
37	Bush	1	
★ 38	Oil seal	1	
39	Key	1	
45	C-retainer	1	
46	Stop ring	Set of 1	

Remark: Parts with a “star” before the part number are recommended replacement parts. To order as a set, please specify O-ring set.

TGA Accessories

Accessory	Type	Manu-facturer	Part No.	Double-acting type						
				TGA-125	TGA-140	TGA-160	TGA-180	TGA-200	TGA-220	TGA-250
Five-port/2-position, non explosion-proof, solenoid valve	Single solenoid	Kuroda	PCS2408-MC	★	★	★	★	–	–	–
		Kuroda	PCS2415-MC	–	–	–	–	★	★	★
	Double solenoid	Kuroda	PCD2408-MC	○	○	○	○	–	–	–
		Kuroda	PCD2415-MC	–	–	–	–	○	○	○
Five-port/2-position, explosion-proof, solenoid valve	Single solenoid	Kaneko	MB15G-TMS	○	○	○	○	○	○	○
	Double solenoid	Kaneko	MB15DG-TMS	○	○	○	○	○	○	○
Filter regulator		SMC	AW30-03B-X490	○	○	○	○	–	–	–
		SMC	AW40-04B-2	–	–	–	–	○	○	○
Limit switch	Non explosion-proof	Tomoe	TMS-BOX	★	★	★	★	★	★	★
		Azbil	1LS1-J	○	○	○	○	○	○	○
		OMRON	WLCA2	○	○	○	○	○	○	○
	Explosion-proof	Azbil	1LX-7001	○	○	○	○	○	○	○
		Azbil	VCX-7003	○	○	○	○	○	○	○
Proximity switch	M18 shielded	OMRON	E2E-X7D1-N	★	★	★	★	★	★	★
	M18 non-shielded	OMRON	E2E-X14MD1	○	○	○	○	○	○	○
	M30 shielded	OMRON	E2E-X10D1-N	○	○	○	○	○	○	○
Positioner	Electro-pneumatic	SSS	TCE2000	★	★	★	★	★	★	★
		SMC	TP8100	○	○	○	○	○	○	○
		Azbil	AVP300	○	○	○	○	○	○	○
	Pneumatic-pneumatic	SMC	IP5100	○	○	○	○	○	○	○
Manual operating	Manual gear unit	Tomoe	MGC	○	○	○	○	○	○	○
Stroke adjuster		Tomoe	–	○	○	○	○	○	○	○
Speed controller		SMC	AS3000-03	★	★	★	★	–	–	–
		SMC	AS4000-04	–	–	–	–	★	★	★
Solencer		SMC	AN200-02	○	○	○	○	○	○	○
		SMC	AN300-03	○	○	○	○	○	○	○
		SMC	AN400-04	–	–	–	–	○	○	○
Lock-up valve		SMC	IL211-02	○	○	○	○	○	○	○
Quick exhaust valve		SMC	AQ3000-03	○	○	○	○	–	–	–
		SMC	AQ5000-04	–	–	–	–	○	○	○
Booster relay		SMC	IL100-03	○	○	○	○	○	○	○

Remarks:

1. Symbols in table mean the following: ★: Standard accessory, ○: Installable, –: Un-installable
2. This table shows typical accessory combinations. Accessories not shown in this table can also be installed. For details, please consult us.

TGA Solenoid valves

■Purpose

The purpose of a solenoid valve is to use electrical signals to remotely change the air flow to operate the valves.

■Standard specifications

Item	Five-port/2-position, non explosion-proof, solenoid valve (single solenoid)	Five-port/2-position, non explosion-proof, solenoid valve (single solenoid)	Five-port/2-position, explosion-proof, solenoid valve (single solenoid)
Type	PCS2408-MC	PCS2415-MC	MB15G-10AE12PU-TMS
Manufacturer	Kuroda	Kuroda	Kaneko
JIS symbol	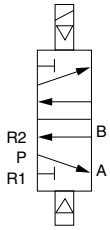	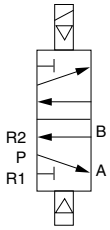	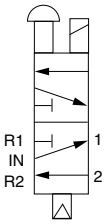
Applicable cylinder type	TGA-125 to 180	TGA-200 to 250	TGA-125 to 250
Air connection port size	Rc3/8 (IN, OUT) Rc1/4 (EXH)	Rc1/2 (IN, OUT) Rc3/8 (EXH)	Rc3/8 (IN, OUT) Rc1/4 (EXH)
Effective sectional area	30mm²	70mm²	11mm²
Rated voltage	AC100V/110V 50/60Hz AC200V/220V 50/60Hz DC24V	AC100V/110V 50/60Hz AC200V/220V 50/60Hz DC24V	AC100V, AC200V 50/60Hz AC110V, AC220V 60Hz DC24V
Explosion-proof construction	–	–	d2G4
Wiring method	Conduit terminal	Conduit terminal	Conduit terminal
Conduit entry	G1/2	G1/2	G1/2
Manual operating	Non lock bush type	Non lock bush type	Manual botton lock type
Operating temperature	–5 to 50 degrees C	–5 to 50 degrees C	–20 to 60 degrees C
Weight	0.46kg	0.85kg	1.24kg

Remark: The above are standard TOMOE-compatible solenoid valves. It is also possible to install solenoid valves other that those listed above such as a double solenoid or 3-port solenoid valve. For details, please consult us.

MB15G-10 · AE12PU-TMS

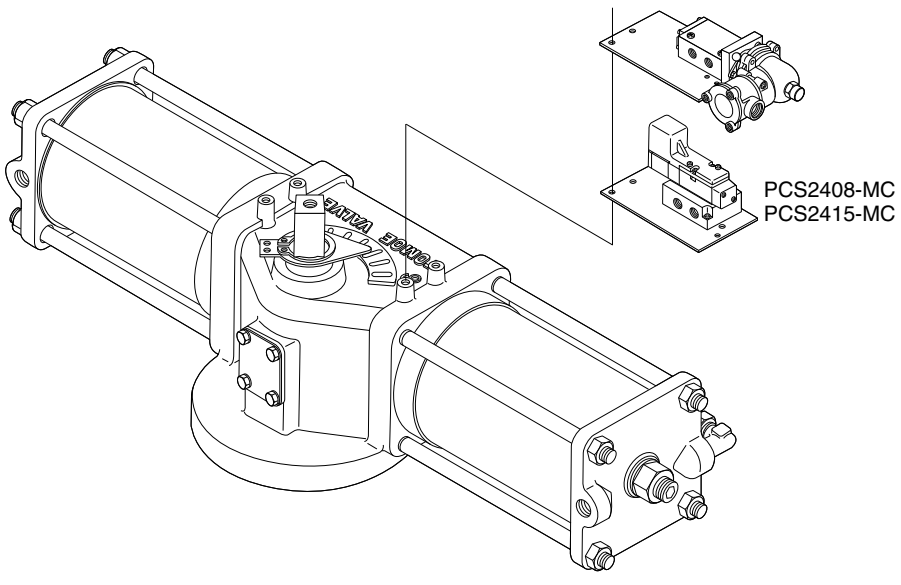

TGA Filter regulator (Pressure reducer with filter)

■Purpose

Filter regulators are used to eliminate oil, water, and dust from the operating air in order to protect pneumatic accessories (solenoid valve and cylinder, etc.) and to keep operating pressure at an adequate and constant level (about 4 to 5 K).

■Standard specifications

Type	AW30-03B-X490	AW40-04B-2
Manufacturer	SMC	SMC
JIS symbol	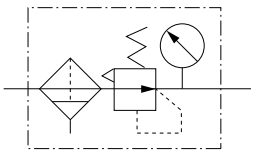	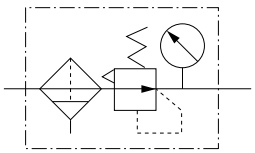
Applicable cylinder type	TGA-125 to 180	TGA-200 to 250
Set pressure range	0.05 to .85MPa	0.05 to 0.85MPa
Pressure gauge connection port	Rc1/8	Rc1/4
Operating temperature	—5 to 60 degrees C	—5 to 60 degrees C
Air connection port size	Rc3/8	Rc1/2
Filtration	5μm	5μm
Option	Auto drain for low and high temperatures	Auto drain for low and high temperatures
Weight	0.79kg	1.52kg

Remark: The above are standard TOMOE-compatible filter regulators. It is also possible to install filter regulators other that those listed above. For details, please consult us.

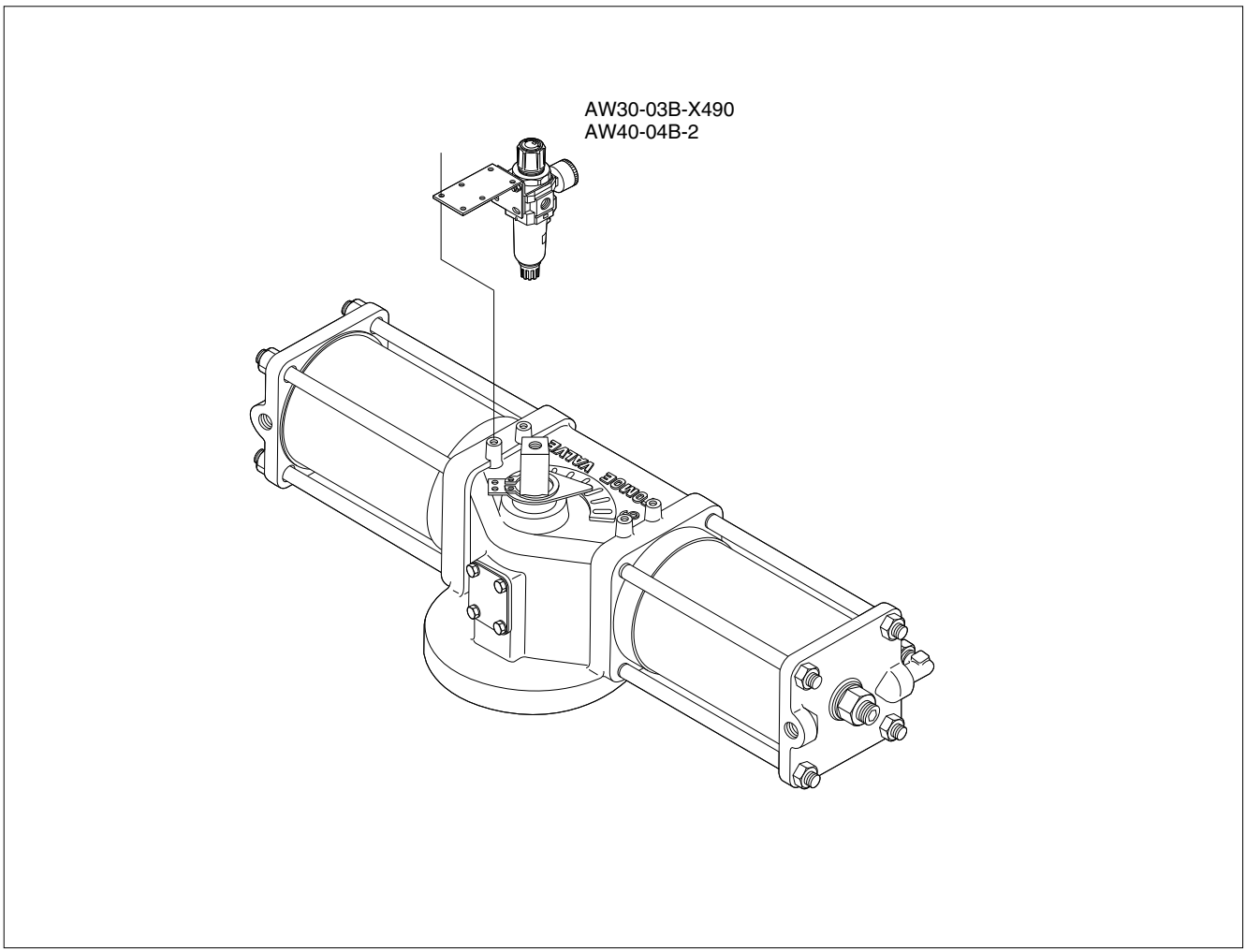

TGA Limit switches

■Purpose

Limit switches are used to convert the valve position (full close, full open, half open) into electric signals for lamp indication at a remote location.

■Standard specifications

Type	TMS-BOX	1LS1-J WLCA2	1LX-7001	VCX-7003
Manufacturer	Tomoe	Azbil (1LS1-J) OMRON (WLCA2)	Azbil	Azbil
Circuit	Monopolar double-throw (1C, SPDT) X2 COM — NC / NO	Bipolar double interruption (1A1B, DPDT) (NO) 4 — (NO) 3 (NC) 1 — (NC) 2	Bipolar double interruption (1A1B, DPDT) (NO) 4 — (NO) 3 (NC) 1 — (NC) 2	Monopolar double-throw (1C, SPDT) X2 COM — NC / NO
Actuator	Hinge roller lever type	Roller lever type	Roller lever type	Adjustable roller lever type
Class of insulation	IP67 (Option: ExdⅡBT6)	IP67	IP67, Exde ⅡC T6	IP67, Exde ⅡC T6
Rated voltage	AC250V-16A DC12V-0.6A	AC125V-10A AC250V-10A AC480V-10A DC125V-0.8A DC250V-0.4A	AC125V-5A AC250V-5A DC125V-0.8A DC250V-0.4A	AC250V-5A DC125V-0.8A DC250V-0.4A
Operating temperature	−10 to 80 degrees C	−10 to 80 degrees C	−10 to 60 degrees C	−10 to 60 degrees C
Conduit entry	2-G1/2	G1/2	G1/2	G3/4
Option	—	Heat, cold and corrosion resistant	Hydrogen anti-explosion (1LX5701)	Waterproof (VCL-5003)
Contacts	Switch detection with one (2 switches inside)	On or off detection with one Two for both on and off detection	On or off detection with one Two for both on and off detection	Switch detection with one (2 switches inside)
Weight	0.98kg	0.28kg	0.74kg	0.77kg

Remark: The above are standard TOMOE-compatible limit switches. It is also possible to install limit switches other that those listed above. For details, please consult us.

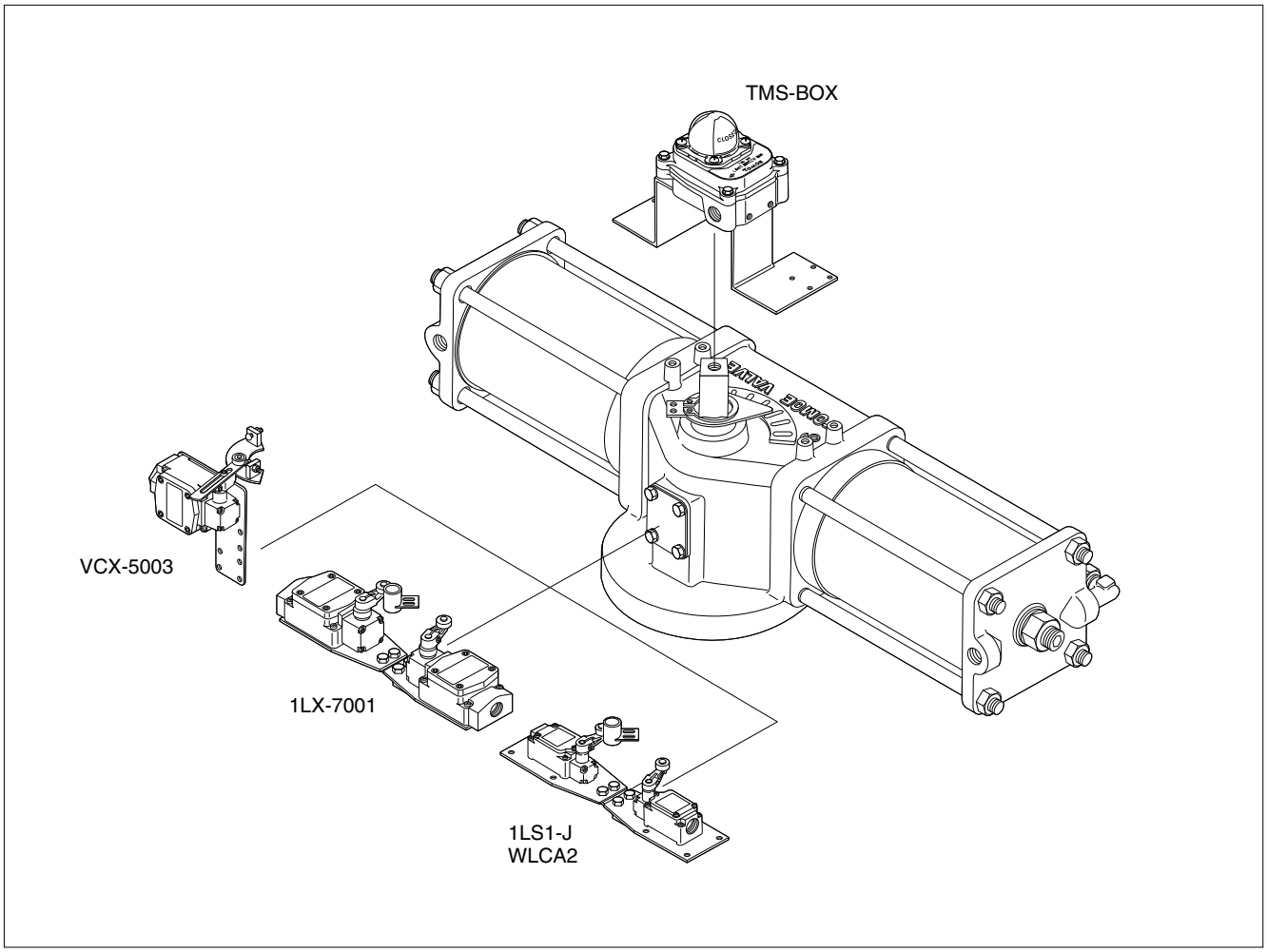

TGA Proximity Switches

■Purpose

Proximity switches are used to convert the valve position (full close, full open, half open) into electric signals for lamp indication at a remote location.

■Standard Specifications

Product	M18 shielded type (Can be embedded in metal.)	M18 non-shielded type (Cannot be embedded in metal.)	M30 shielded type (Can be embedded in metal.)
Type	E2E-X7D1-N	E2E-X14MD1	E2E-X10D1-N
Manufacturer	OMRON	OMRON	OMRON
With power source	DC 2-wire system	DC 2-wire system	DC 2-wire system
Motion mode	NO	NO	NO
Detecting distance	0 to 5.6mm	0 to 11.2mm	0 to 8mm
Object to be detected	Magnetic metal (stainless steel possible)	Magnetic metal (stainless steel possible)	Magnetic metal (stainless steel possible)
Power source voltage	DC12 to 24V	DC12 to 24V	DC12 to 24V
Current consumption	3 to 100mA	3 to 100mA	3 to 100mA
Class of insulation	IP67	IP67	IP67
Operating temperature	−25 to 70 degrees C	−25 to 70 degrees C	−25 to 70 degrees C
Connection	Cord draw type (2m)	Cord draw type (2m)	Cord draw type (2m)
Contacts	On or off detection with one Two for both on and off detection	On or off detection with one Two for both on and off detection	On or off detection with one Two for both on and off detection
Weight	0.13kg	0.13kg	0.18kg

Remark: The above are standard TOMOE-compatible proximity switches. It is also possible to install limit switches other that those listed above such as a DC 3-wire, AC 2-wire, AC/DC 2-wire or connector-type proximity switch. For details, please consult us.

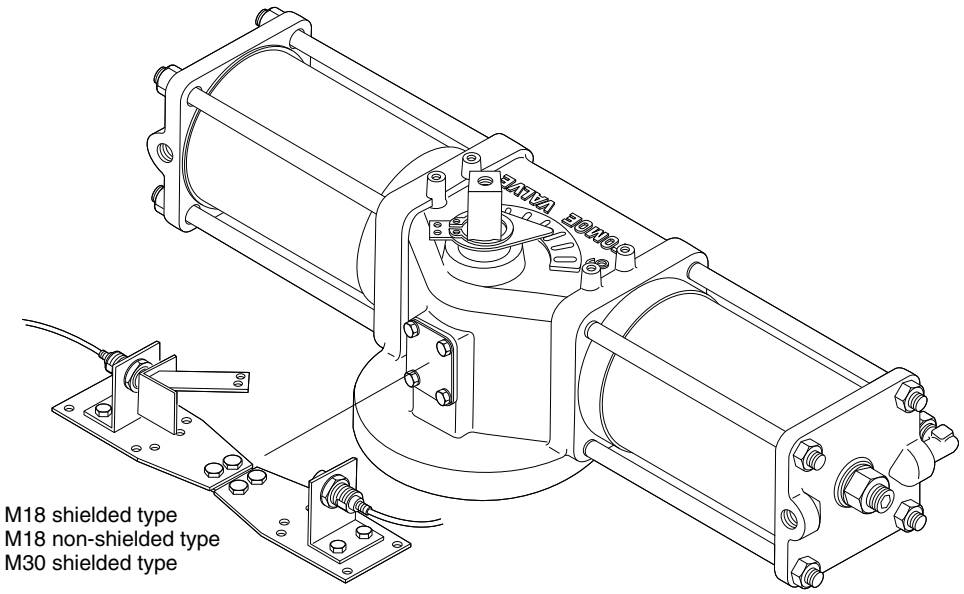

M18 shielded type
M18 non-shielded type
M30 shielded type

TGA Positioners

■Purpose

A positioners are used for quick and accurate control of the valve opening angle with pneumatic signals or 4-20mA DC input signals from a control room or controller unit.

■Standard specifications

	Electro-Pneumatic, analog	Electro-Pneumatic, analog	Electro-Pneumatic, digital (smart)	Pneumatic-Pneumatic
Type	TCE2000	TP8100	AVP300	IP5100
Manufacturer	Tomoe	Tomoe	Azbil	SMC
Input signal	4 to 20mA	4 to 20mA	4 to 20mA	0.02 to 0.1MPa
Resistance	250Ω (4 to 20mADC)	235±15Ω (4 to 20mADC)	300Ω (4 to 20mADC)	—
Supply air	0.14 to 0.7MPa	0.14 to 0.7MPa	0.14 to 0.7MPa	0.14 to 0.7MPa
Output flow rate	180L/min. or more (SUP=0.4MPa)	200L/min. or more (SUP=0.4MPa)	250L/min. or more (SUP=0.4MPa)	200L/min. or more (SUP=0.4MPa)
Air consumption	Within 11L/min. (SUP=0.4MPa)	Within 11L/min. (SUP=0.4MPa)	Within 10L/min. (SUP=0.4MPa)	Within 11L/min. (SUP=0.4MPa)
Operating temperature	−20 to 83 degrees C (Non explosion-proof) −20 to 60 degrees C (Explosion-proof type d2G4)	−20 to 8 degrees C (Non explosion-proof) −20 to 60 degrees C (Explosion-proof type d2G4)	−40 to 80 degrees C (Non explosion-proof) −20 to 60 degrees C (Explosion-proof type d2G4)	−20 to 80 degrees C
Class of insulation	IP65, ExdⅡBT6X	IP67, ExdⅡBT5	IP65 (option: Exd2CT6X)	—
Air connection port size	Rc1/4	Rc1/4	Rc1/4	Rc1/4
Conduit entry	2-G1/2	2-G1/2	2-G1/2	—
Sensitivity	Within 0.5%FS	Within 0.5%FS	Within 1%FS	Within 0.5%FS
Repeatability	Within ±1.5%FS	Within ±2%FS	Within ±1%FS	Within ±2%FS
Hysterisis	Within 1%FS	Within 1%FS	Within 1%FS	Within 1%FS
Option	—	—	Analog signal (4 to 20 mA) output Any special opening setting Supports field bus.	—
Weight	2.3kg	2.6kg	2.8kg	1.2kg

Remark: The above are standard TOMOE-compatible positioners. It is also possible to install positioners other that those listed above. For details, please consult us.

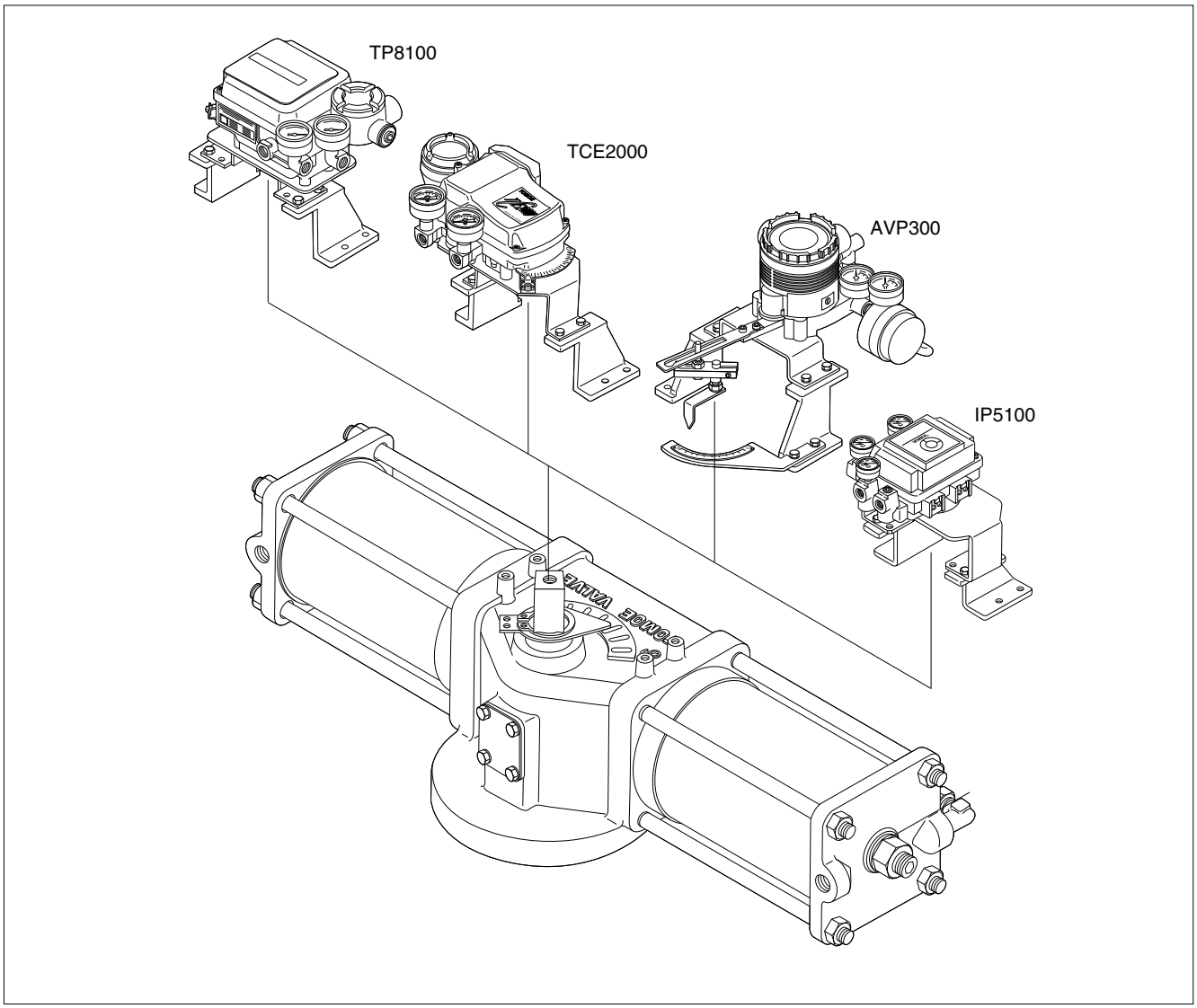

TGA Manual operation unit

■Purpose

The operation unit is for manual operation of the pneumatic cylinder when air supply fails.

■Standard specifications

	Function	Type	Applicable cylinder	Remarks
1	Manual gear unit	Worm gear	(D) Double acting type T-matic (E) Double acting type over TGA-100 (F) Single acting type	(1) Be sure to open the bypass valve. (2) Attach and detach the clutch exactly before and after operation.

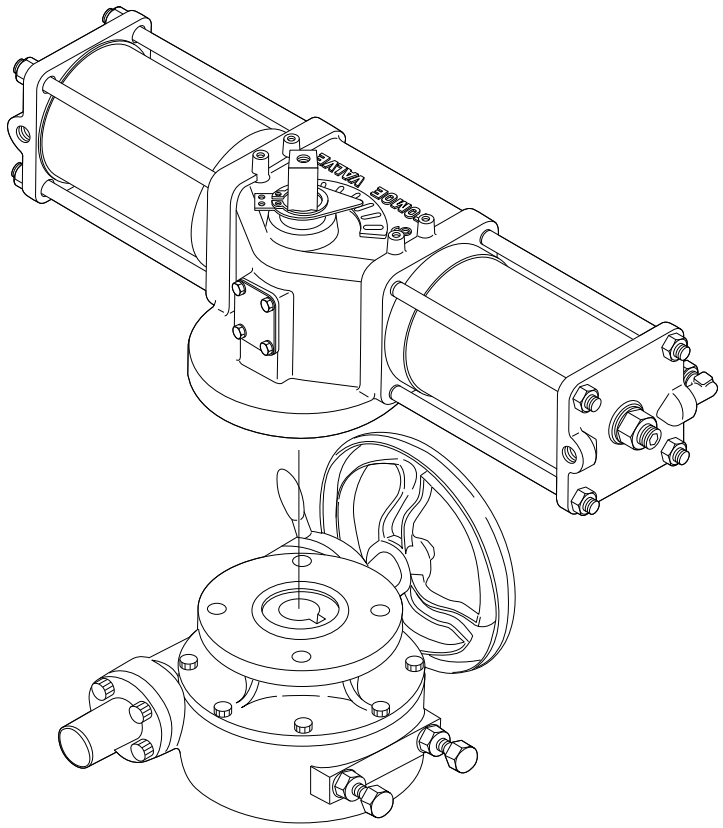

TGA Stroke adjuster

■Purpose

The stroke adjuster sets the valve opening freely from the outside.

■Standard specifications

Function	Type	Applicable cylinder	Remarks
Free opening unit	Side adjust screw	(A) Double acting type T-matic	After attaching a long adjustment bolt to the cylinder cover, attach the cover of the aluminium casing.
Adjust screw	Side adjust screw	(B) Double acting type TGA-100 (C) Single acting type T-matic	Attach long adjusting screws and lock nut to the cylinder cover.

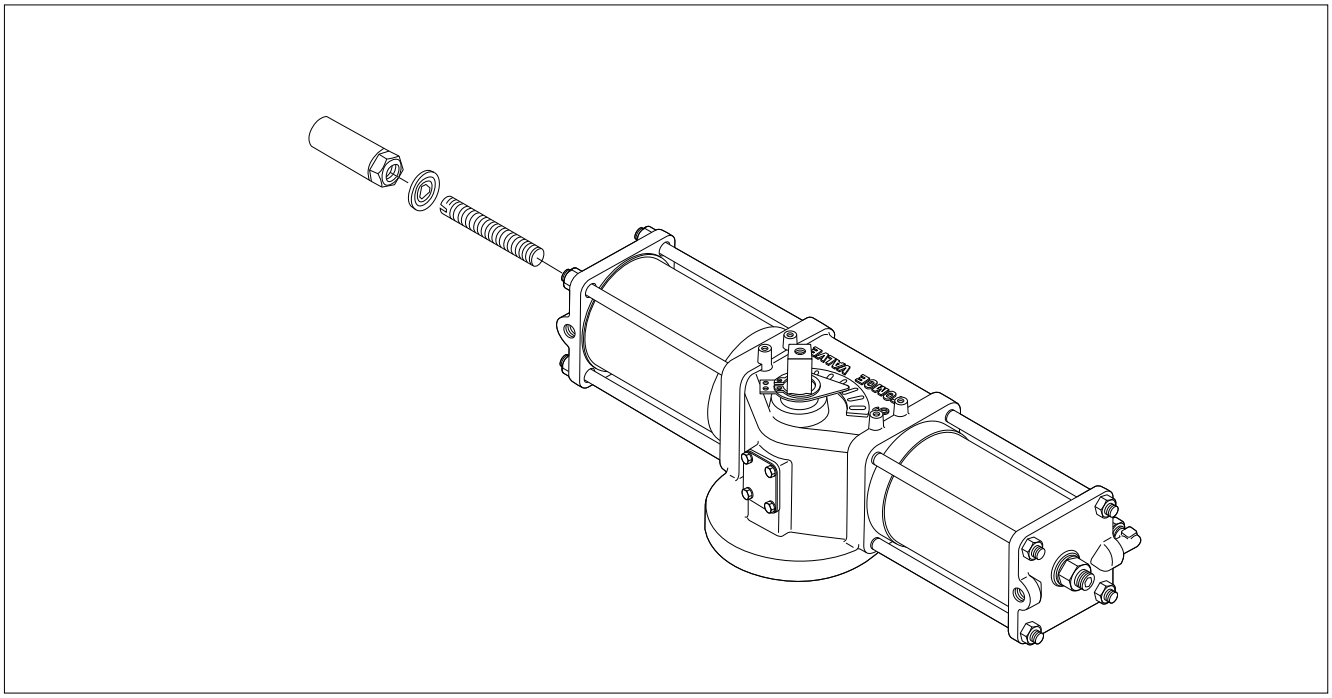

TGA Speed controllers

■Purpose

For double-acting cylinders, the speed controller is used as meter out (exhaust throttle) and for single-acting cylinders, it is used as meter in (suction throttle).

■Standard specifications

Type	AS3000-03	AS4000-04
Manufacturer	SMC	SMC
JIS symbol	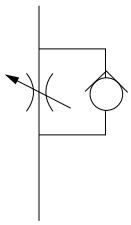	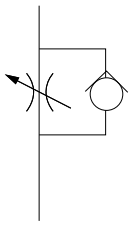
Applicable cylinder type	TGA-125 to 180	TGA-200 to 250
Needle revolution	8 rotations.	8 rotations.
Adjustable range	5 to 15 secs	5 to 15 secs
Operating temperature	−5 to 60 degrees C	−5 to 60 degrees C
Air connection port size	Rc3/8	Rc1/2
Attachement	Install to cylinder air connect port	Install to cylinder air connect port
Weight	0.13kg	0.21kg

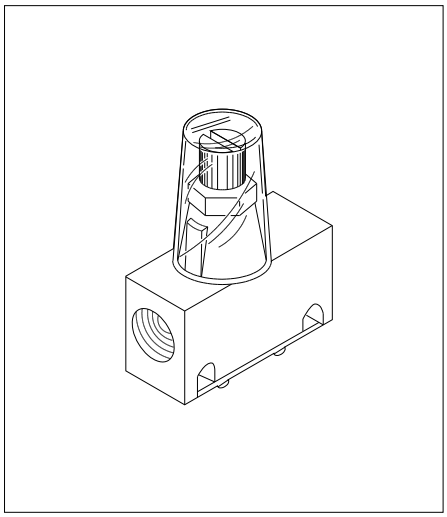

Remark: The above are standard TOMOE-compatible speed controllers. It is also possible to install speed controllers other that those listed above. For details, please consult us.

TGA Silencers

■Purpose

Silencers eliminate noise at the exhaust ports on various kinds of pneumatic accessories.

■Standard specifications

Type	AN20-02	AN30-03	AN40-04
Manufacturer	SMC	SMC	SMC
JIS symbol	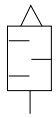	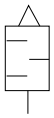	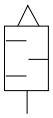
Effect of muffing	30dB (A)	30dB (A)	30dB (A)
Operating temperature	5 to 60 degrees C	5 to 60 degrees C	5 to 60 degrees C
Port size	Rc1/4	Rc3/8	Rc1/2
Attachement	Screw into exhaust port of solenoid valve.	Screw into exhaust port of solenoid valve.	Screw into exhaust port of solenoid valve.
Weight	0.02kg	0.03kg	0.04kg

Remark: The above are standard TOMOE-compatible silencers. It is also possible to install silencers other that those listed above. For details, please consult us.

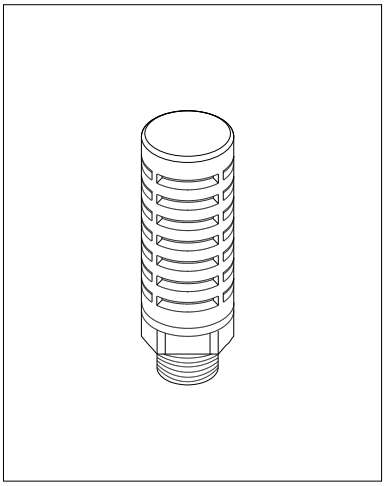

TGA Lock-up valves

■Purpose

When air supply fails, the lock-up valve automatically stops the line until pressure is restored and keeps the operating unit of the cylinder at the stay-put position.

■Standard specifications

Type	IL211-02
Manufacturer	SMC
JIS symbol	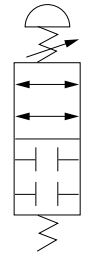
Effective sectional area	17mm^2
Operating temperature	—5 to 60 degrees C
Air connection port size	Rc1/4
Signal pressure connection port	Rc1/4
Weight	0.64kg

Remark: The above are standard TOMOE-compatible lock-up valves. It is also possible to install lock-up valves other that those listed above. For details, please consult us.

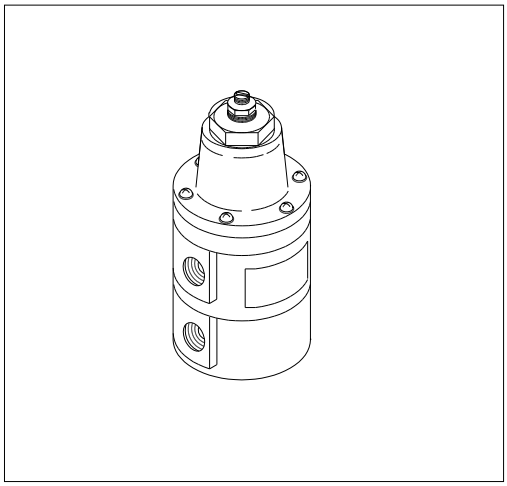

TGA Quick exhaust valve

■Purpose

Quick exhaust valves act in the reverse way to a speed controller. The valve shortens the open/close operation time by improving the exhaust efficiency of the cylinder.

■Standard specifications

Type	AQ3000-03	AQ5000-04
Manufacturer	SMC	SMC
JIS symbol	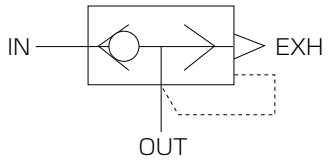	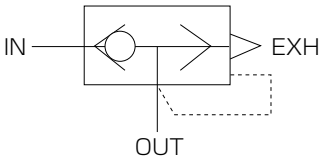
Effective sectional area	70mm² (EXH PORT)	115mm² (EXH PORT)
Operating temperature	—5 to 60 degrees C	—5 to 60 degrees C
Air connection port size	Rc3/8	Rc1/2
Weight	0.21kg	0.69kg

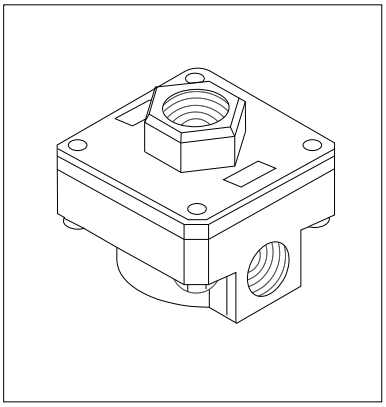

Remark: The above are standard TOMOE-compatible quick exhaust valves. It is also possible to install quick exhaust valves other that those listed above. For details, please consult us.

TGA Booster relay

■Purpose

A booster relay is used to make switching time shorter and to improve response in cases when the piping distance from the meters and the actuator is very far, and when the capacity of the actuator is very large, or when the actuator has a large control valve with a positioner.

■Standard specifications

Type	IL100-03
Manufacturer	SMC
JIS symbol	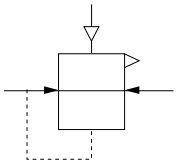
Output flow rate	600L/min (SUP=0.5MPa)
Air consumption	Within 3L/min. (OUT=0.1MPa)
Operating temperature	—5 to 60 degrees C
Repeatability	Within ±1%FS
Hysterisis	Within 1%FS
Air connection port size	Rc3/8
Signal pressure connection port	Rc1/4
Weight	0.56kg

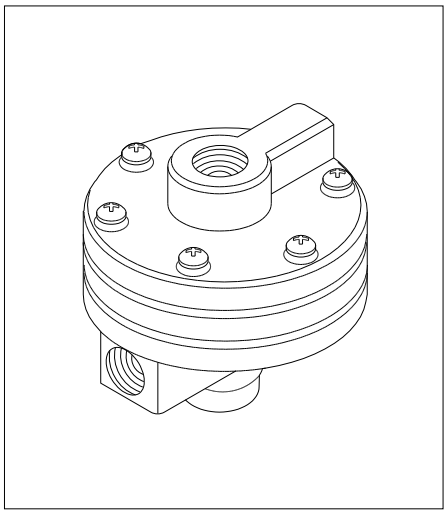

Remark: The above is a standard TOMOE-compatible booster relay.
It is also possible to install booster relays other than that listed above.
For details, please consult us.

TGA Examples of standard air circuits for pneumatic actuators Double-acting type

Standard and semi-standard accessories and their use
Example of standard air circuit for on/off operation (double-acting type)

Shown below are standard circuits to open and close a butterfly valve driven by a double-acting air cylinder while transmitting electrical signals from a remote control room. Switching of the flow of operation air is performed by the solenoid valve, and detection of the open/close position of the valve is performed by a limit switch, with feedback of the electrical signals to the control room.

1 Butterfly valve opens when solenoid valve is energized.

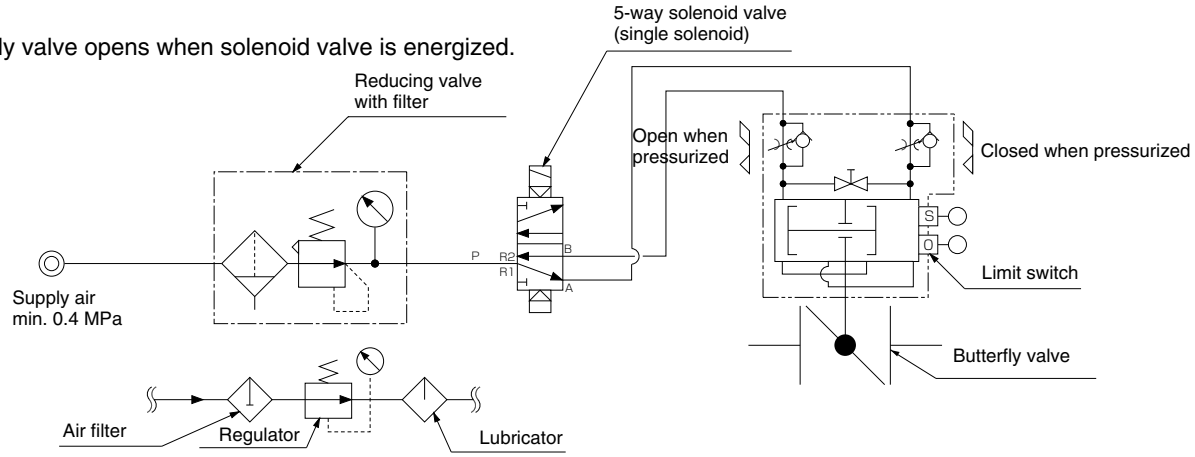

2 Butterfly valve closes when solenoid valve is energized.

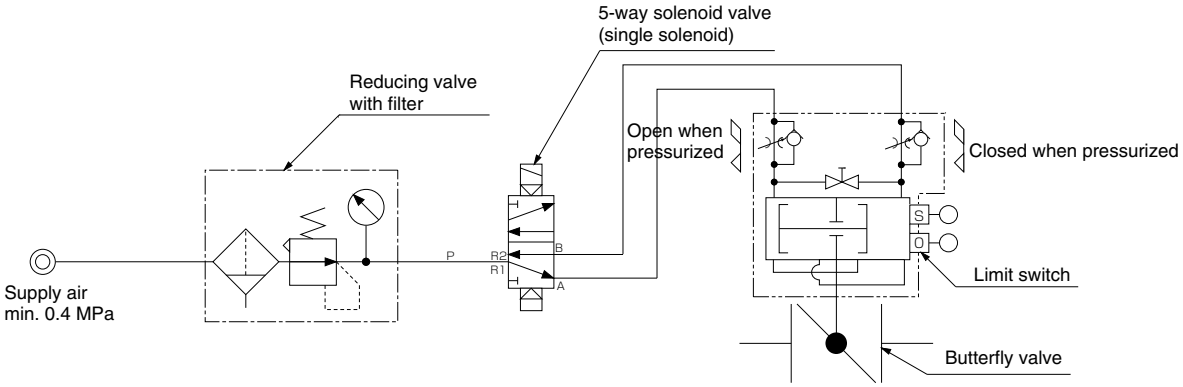

3 Butterfly valve closes when SOL.1 is energized.
Butterfly valve opens when SOL.2 is energized.

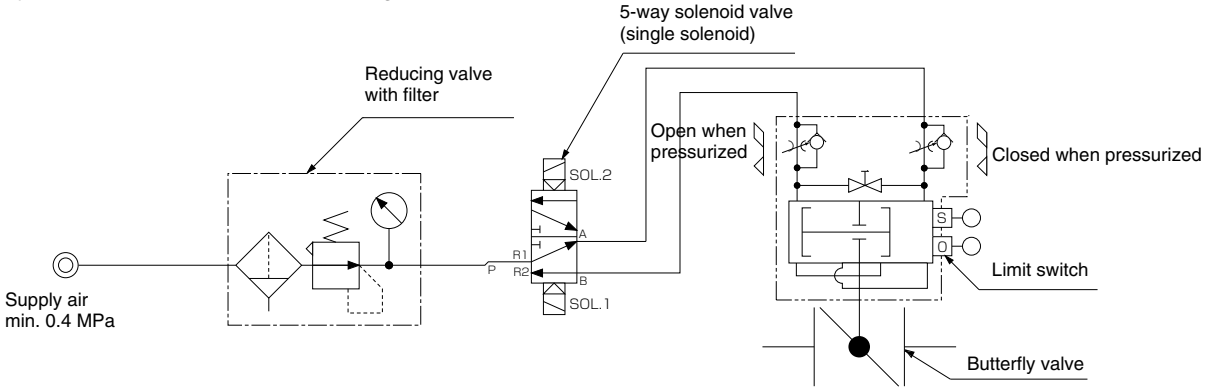

→Once SOL.1 is energized, the condition is maintained even after it is de-energized unless SOL.2 is energized.

Example of standard air circuit for control operation (double-acting type)

Shown below are examples of standard circuits in which a P/P or E/P positioner is attached to the butterfly valve driven by a double-acting pneumatic cylinder to give instruction signals from a remote control room to the positioner. This adjusts the valve opening exactly and quickly in proportion to the signals, and also detects the open/close position of the valve by a limit switch which sends feedback of the electrical signals to the control room.

4 Direct action
Butterfly valve closes when signal increases.
Butterfly valve opens when signal decreases.

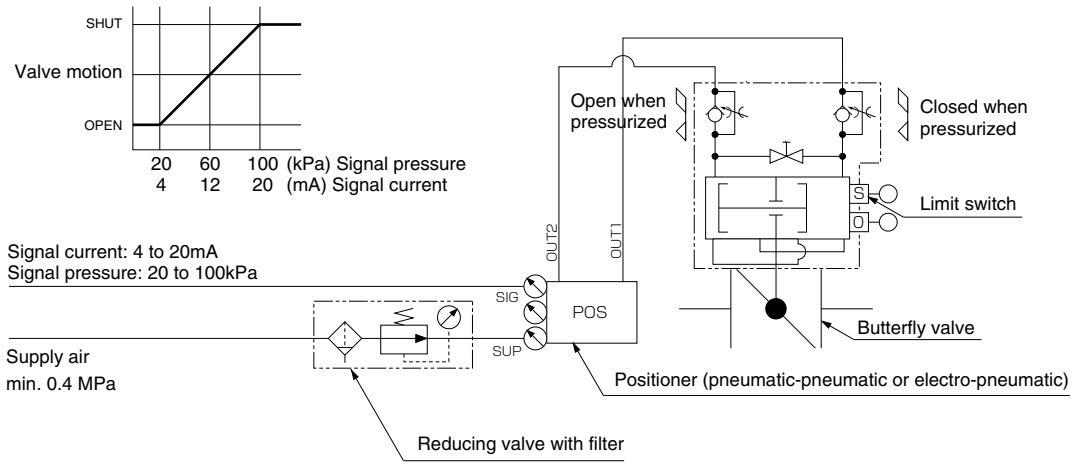

→The butterfly valve opens fully when the input signal goes off under a state of assured air supply.

5 Reverse action
Butterfly valve opens when signal increases.
Butterfly valve closes when signal decreases.

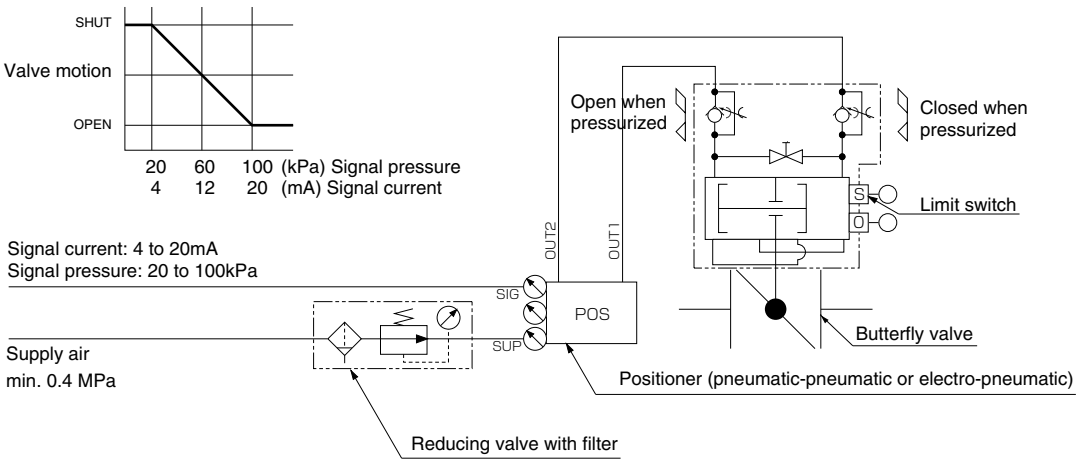

→The butterfly valve closes fully when input signal goes off under a state of assured air supply.

TG-S

The TG-S type spring return pneumatic actuator is suitable for on/off control for medium and large sized valves. With an optional positioner, it can also be used for flow control. Air pressure and the spring force the piston inside the cylinder into a linear reciprocating motion, causing the pin coupled to the piston rod to rotate the output shaft.

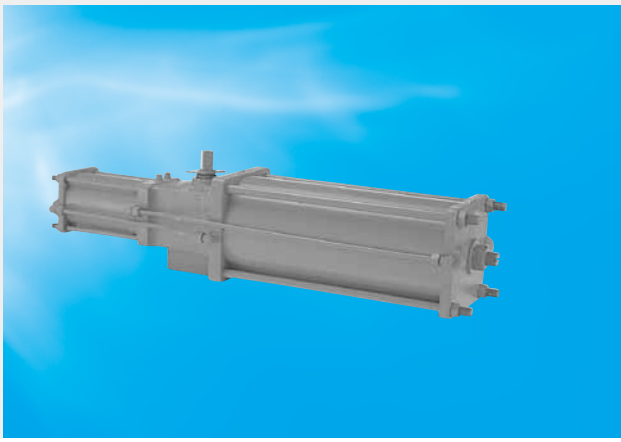

TG-S Specifications				
	TG-10S	TG-12S	TG-14S	TG-20S
Torque（N･m） (0.4MPa)	260	600	1250	3250
Supply pressure (MPa)	0.4～0.7※1			
Body shell max (MPa)	1.0			
Port size	Rc3/8			Rc1/2
Rotating angle	−3 to +93°			
Operating fluid	Dry air			
Working temperature range (degrees)	0 to 80 degree C※2			
Rotating speed range (sec.)	4 to 20	6 to 20	11 to 20	18 to 40
Painting	Epoxy primer finish (Munsell N7)			

※ Supply pressure: 0.4MPa, without accessories

※1 If used for the TRITEC(TT1, TT2) with over 0.5MPa supply pressure, and forecasting over 10,000 times operation. Please ask us about cylinder specifications.

※2 Please ask us when used at working temperature of more than 60 degree C.

TG-S Outer Dimensions

3K

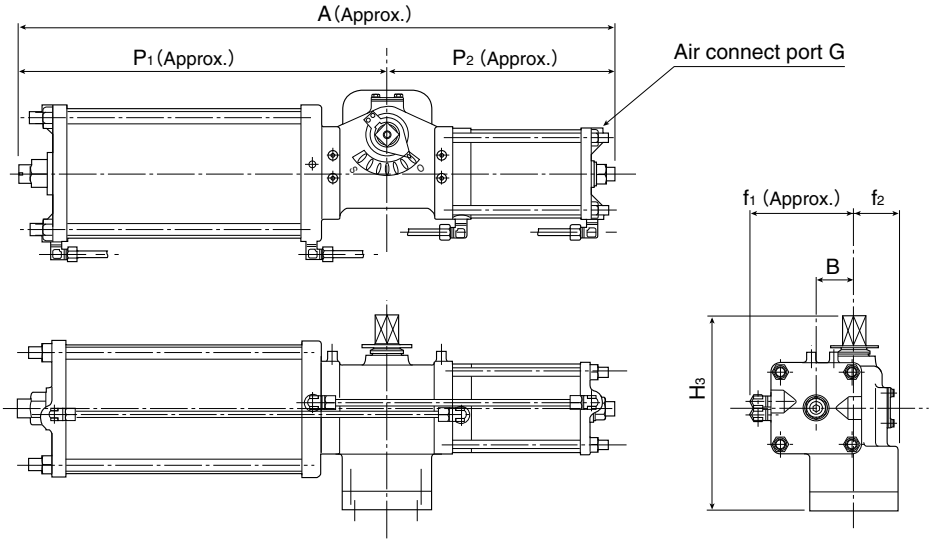

3U

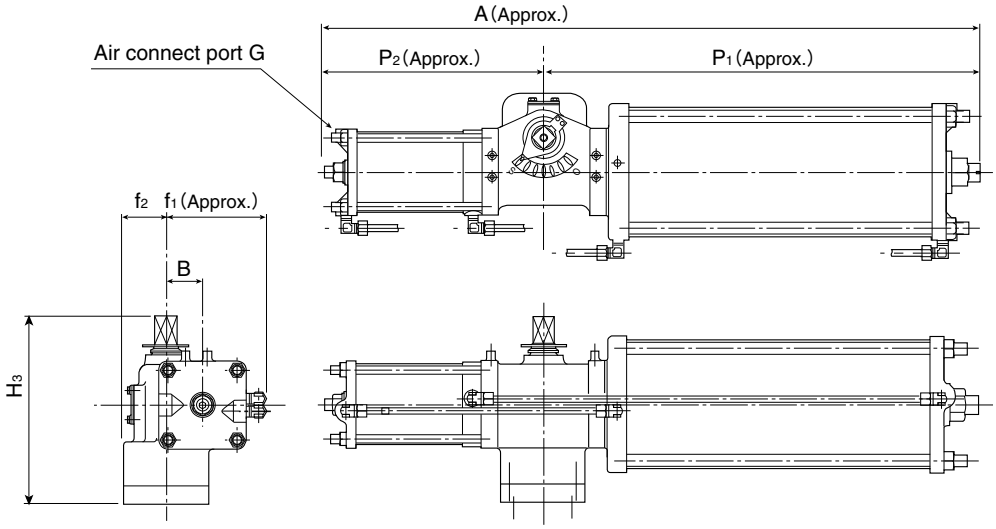

TG-S Dimensions

Type	Dimension (mm)								Approx. Mass (kg)
	A	P1	P2	H	f1	f2	B	G	
TG-10S	945	585	360	307	165	70	60	Rc3/8	50
TG-12S	1080	720	360	307	206	70	60	Rc3/8	95
TG-14S	1255	865	390	340	257	70	67	Rc3/8	191
TG-20S	1655	1095	560	474	348	83	95	Rc1/2	402

TG-S Operation principle

As shown in the picture on the right, the chamber A_1 is connected to the chamber A_2 with copper tubes. The same is true for chamber B_1 and B_2. Operating air is supplied through port "O" and fills chambers B_1 and B_2. The air moves pistons ① and ② to the right, so that the spring is tensed. when thrust is transmitted to the pin on the piston rod to give the output shaft a force to produce counter-clockwise rotation through the arm, which rotates the shaft counter-clockwise. Residual air in chambers A_1 and A_2 is exhausted through port "S".
During air failure mode, the spring forces the piston ② to move left, when thrust is transmitted to the pin on the piston rod to give an output shaft a force to produce clockwise rotation through the arm, which rotates the shaft clockwise.

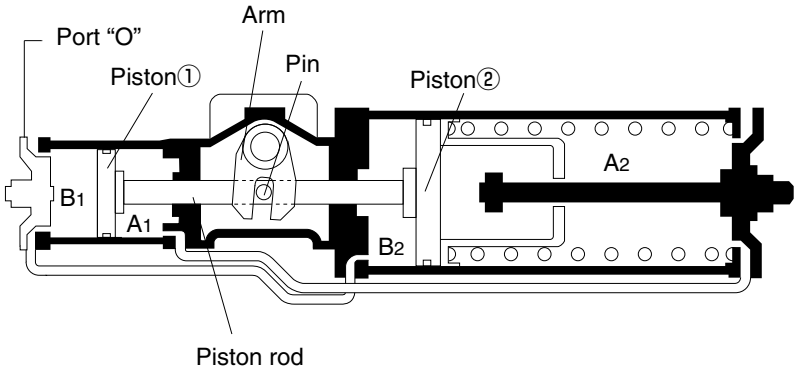

TG-S Air consumption

Type	Cylinder capacity (ℓ)
TG-10S	3.59
TG-12S	6.36
TG-14S	12.56
TG-20S	36.29

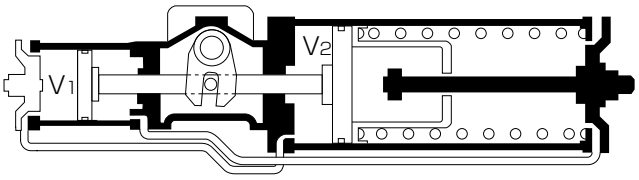

(1) Required air consumption

Double-acting type

$$VD=(A+B)\left(\frac{P-0.1013}{0.1013}\right)N$$

Single-acting type

$$VS=(A \text{ or } B)\left(\frac{P+0.1013}{0.1013}\right)N$$

V D : Double-acting type cylinder air consumption (N ℓ)
V S : Single-acting type cylinder air consumption (N ℓ)
A, B: Cylinder capacity (ℓ)
P: Working pressure (Mpa)
N: Operating frequencies in a given time (1 round trip=1)

(2) Air consumption within a unit time

Double-acting type $CD=\frac{VD}{t}$

Single-acting type $CS=\frac{VS}{t}$

C D: Double-acting type cylinder air consumption (N ℓ/sec)
C S: Single-acting type cylinder air consumption (N ℓ/sec)
t: Unit time (sec)

Remark: The compressor should have a larger capacity than the air consumption calculated in above in (1) and (2).

TGS Output Torque Curve

● Single-acting type (spring returned type)

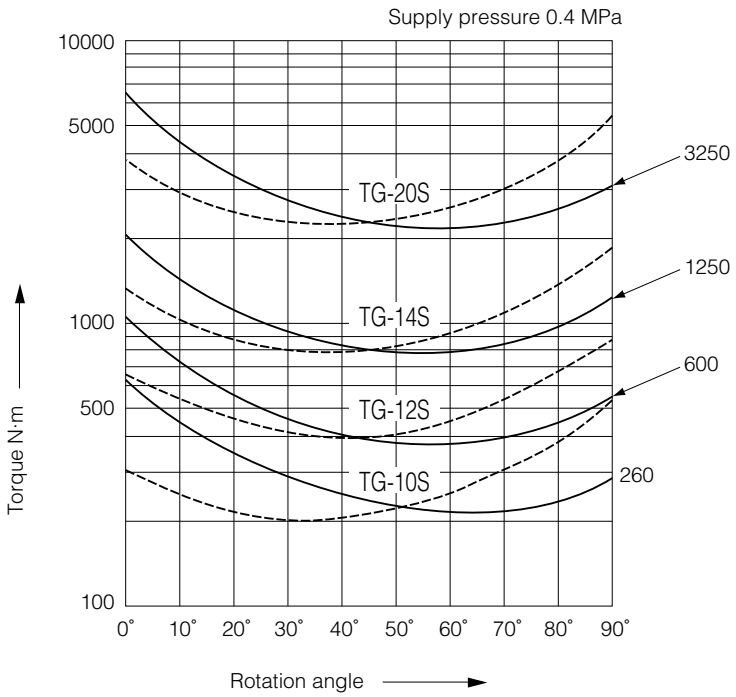

Notes :

- —— Lines show output torque curve by actuator
- ----- Lines show output torque for spring force(air less)
- The table shows the torque at an operating air pressure of 0.4 Mpa.

TG-S Output Torque

(N·m)

Type	Supply pressure (0.4 MPa)		Spring power	
	0°	90°	0°	90°
TG-10S	600	260	260	600
TG-12S	1050	600	600	1050
TG-14S	2000	1250	1250	2000
TG-20S	6500	3250	3250	6500

TG-S Accessories

Accessory	Type	Manu-facture	Part No.	Double-acting type			
				TG-10S	TG-12S	TG-14S	TG-20S
Non explosion-proof, solenoid valve	Single solenoid	Kuroda	PCS2408-MC	★	★	★	—
	Five-port/	Kuroda	PCS2415-MC	—	—	—	★
Explosion-proof, solenoid valve	Single solenoid Five-port/	Kaneko	MB15G-TMS	○	○	○	○
Filter regulator		SMC	AW30-03B-X490	○	○	○	—
		SMC	AW40-04B-2	—	—	—	○
Limit switch	Non explosion-proof	Tomoe	TMS-BOX	★	★	★	★
		Azbil	1LS1-J	○	○	○	○
		OMRON	WLCA2	○	○	○	○
	Explosion-proof	Azbil	1LX5001	○	○	○	○
		Azbil	VCX-5003	○	○	○	○
Proximity switch	M18 shielded	OMRON	E2E-X7D1-N	★	★	★	★
	M18 non-shielded	OMRON	E2E-X14MD1	○	○	○	○
	M30 shielded	OMRON	E2E-X10D1-N	○	○	○	○
Positioner	Electro-pneumatic	SSS	TCE2000	★	★	★	★
		SMC	TP8100	○	○	○	○
		Azbil	AVP300	○	○	○	○
	Pneumatic-pneumatic	SMC	IP5100	○	○	○	○
Manual operating unit	Manual screw handle	Tomoe	—	○	○	○	○
Speed controller		SMC	AS3000-03	★	★	★	—
		SMC	AS4000-04	—	—	—	★
Silencer		SMC	AN200-02	○	○	○	○
		SMC	AN300-03	○	○	○	○
		SMC	AN400-04	—	—	—	○
Lock-up valve		SMC	IL211-02	○	○	○	○

Remarks:
1. Symbols in table mean the following: ★: Standard accessory, ○: Installable, —: Un-installable
2. This table shows typical accessory combinations. Accessories not shown in this table can also be installed. For details please consult us.

■Purpose

The purpose of a solenoid valve is to use electrical signals to remotely change the air flow to operate the valves.

■Standard specifications

Item	Five-port/2-position, non explosion-proof, solenoid valve (single solenoid)	Five-port/2-position, non explosion-proof, solenoid valve (single solenoid)	Five-port/2-position, explosion-proof, solenoid valve (single solenoid)
Type	PCS2408-MC	PCS2415-MC	MB15G-10AE12PU-TMS
Manufacturer	Kuroda	Kuroda	Kaneko
JIS symbol	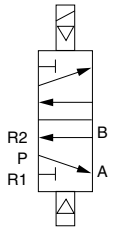	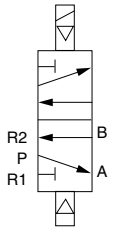	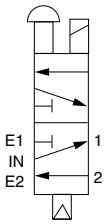
Applicable cylinder type	TG-10S to 14S	TG-20S	TG-10S to 20S
Air connection port size	Rc3/8 (IN,OUT) Rc1/4 (EXH)	Rc1/2 (IN,OUT) Rc3/8 (EXH)	Rc3/8 (IN,OUT) Rc1/4 (EXH)
Effective sectional area	30mm^2	70mm^2	11mm^2
Rated voltage	AC100V/110V 50/60Hz AC200V/220V 50/60Hz DC24V	AC100V/110V 50/60Hz AC200V/220V 50/60Hz DC24V	AC100V, AC200V 50/60Hz AC110V, AC220V 60Hz DC24V
Class of insulation	—	—	d2G4
Wiring method	Conduit terminal	Conduit terminal	Conduit terminal
Conduit entry	G1/2	G1/2	G1/2
Manual operating	Non lock bush type	Non lock bush type	Manual botton lock type
Operating temperature	−5 to 50 degrees C	−5 to 50 degrees C	−20 to 60 degrees C
Weight	0.46kg	0.85kg	1.24kg

Remark: The above are standard TOMOE-compatible solenoid valves. It is also possible to install solenoid valves other that those listed above such as a port solenoid valve. For details, please consult us.

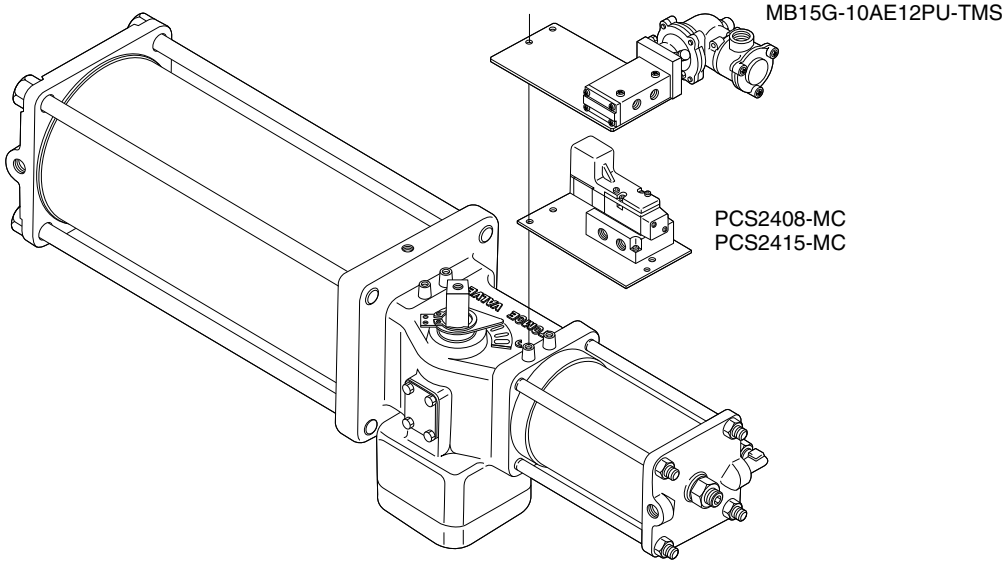

Actuator
New ELMY 4I
New MICOM ELMY II 4I
PMK-SRF 4K
SRJ 4J
LTKD 4L
New T-DYNAMO 7E/7F/7G
TGA 3A
TG-S 3K/3U
3C
Diaphragm 6X/6W/6Z/6A/6B
Hydraulic cylinder 3H
Manual Actuators 1T/1J/2U/2I/2S/2G/2R

TG-S Filter regulator (Decompression valve with filter)

■Purpose

Filter regulators are used to eliminate oil, water, and dust from the operating air in order to protect pneumatic accessories (solenoid valve and cylinder, etc.) and to keep operating pressure at an adequate and constant level (about 4 to 5 K).

■Standard specifications

Type	AW30-03B-X490	AW40-04B-2
Manufacturer	SMC	SMC
JIS symbol	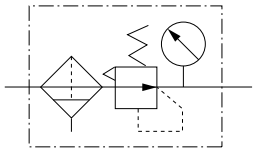	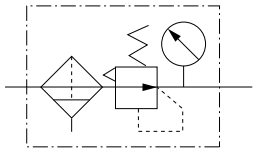
Applicable cylinder type	TG-10S to 14S	TG-20S
Set pressure range	0.05 to 0.85MPa	0.05 to 0.85MPa
Pressure gauge connection port	Rc1/8	Rc1/4
Operating temperature	−5 to 60 degrees	−5 to 60 degrees
Air connection port size	Rc3/8	Rc1/2
Attachment	5μm	5μm
Option	Auto drain for low and high temperatures	Auto drain for low and high temperatures
Weight	0.79kg	1.52k

Remark: The above are standard TOMOE-compatible filter regulators. It is also possible to install filter regulators other that those listed above. For details, please consult us.

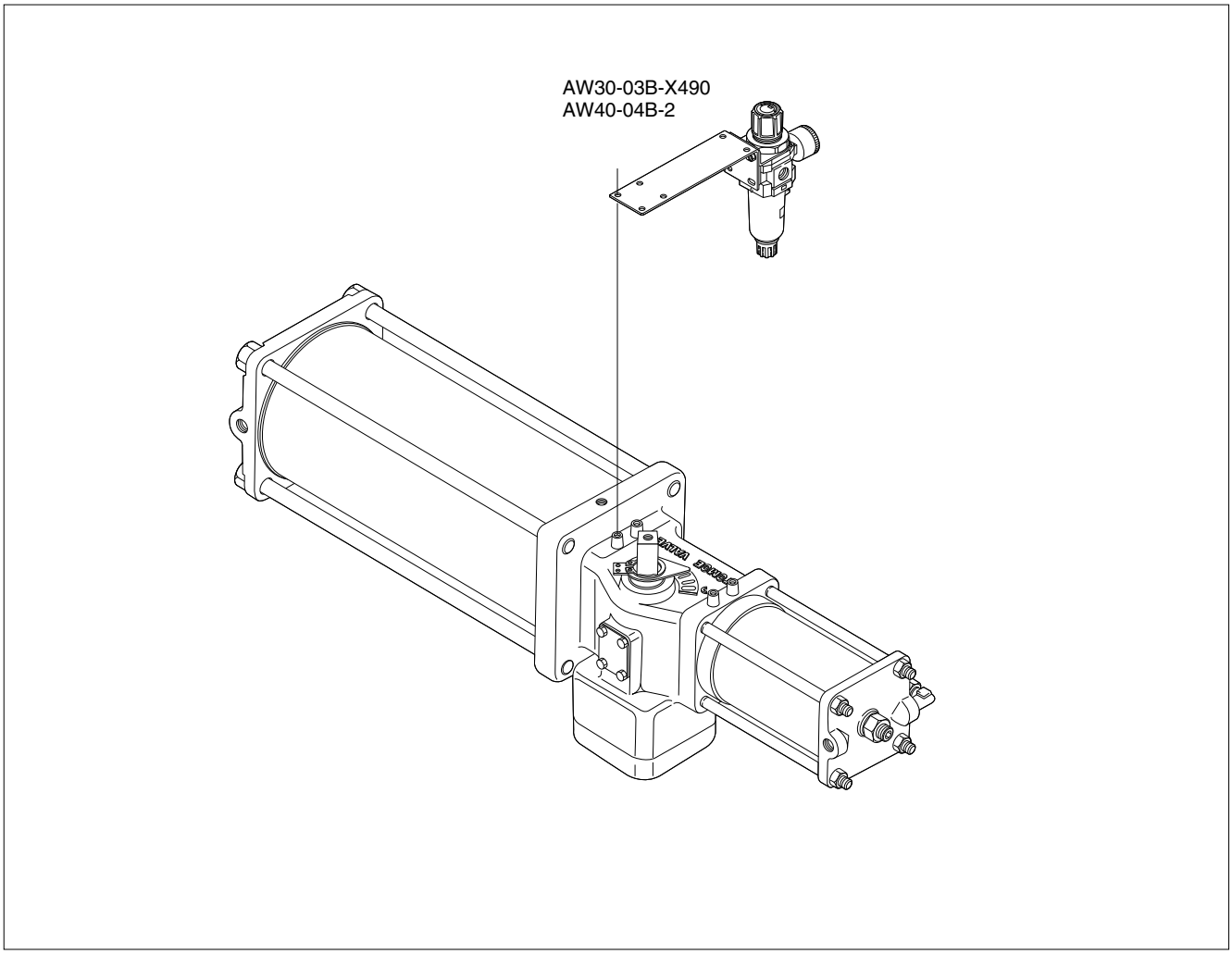

TG-S Limit switches

■Purpose

Limit switches are used to convert the valve position (full close, full open, half open) into electric signals for lamp indication at a remote location.

■Standard specifications

Type	TMS-BOX	1LS1-J WLCA2	1LX-7001	VCX-7003
Manufacturer	Tomoe	Azbil(1LS1-J) OMRON(WLCA2)	Azbil	Azbil
Circuit	Monopolar double-throw (1C, SPDT)X2 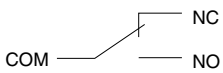	Bipolar double interruption (1A1B, DPDT) 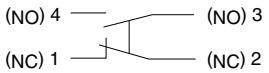	Bipolar double interruption (1A1B, DPDT) 	Monopolar double-throw (1C, SPDT)X2 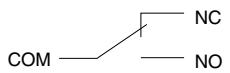
Actuator	Hinge roller lever type	Roller lever type	Roller lever type	Adjustable roller lever type
Class of insulation	IP67(Option: ExdⅡBT6)	IP67	IP67, Exde ⅡC T6	IP67, Exde ⅡC T6
Rated voltage	AC250V-16A DC12V-0.6A	AC125V-10A AC250V-10A AC480V-10A DC125V-0.8A DC250V-0.4A	AC125V-5A AC250V-5A DC125V-0.8A DC250V-0.4A	AC250V-5A DC125V-0.8A DC250V-0.4A
Operating temperature	−10 to 80 degrees C	−10 to 80 degrees C	−10 to 60 degrees C	−10 to 60 degrees C
Conduit entry	2-G1/2	G1/2	G1/2	G3/4
Option	—	Heat, cold and corrosion resistant	Hydrogen anti-explosion (1LX5701)	Waterproof (VCL-5003)
Contacts	Switch detection with one (2 switches inside)	On or off detection with one Two for both on and off detection	On or off detection with one Two for both on and off detection	Switch detection with one (2 switches inside)
Weight	0.98kg	0.28kg	0.74kg	0.77kg

Remark: The above are standard TOMOE-compatible limit switches. It is also possible to install limit switches other that those listed above. For details, please consult us.

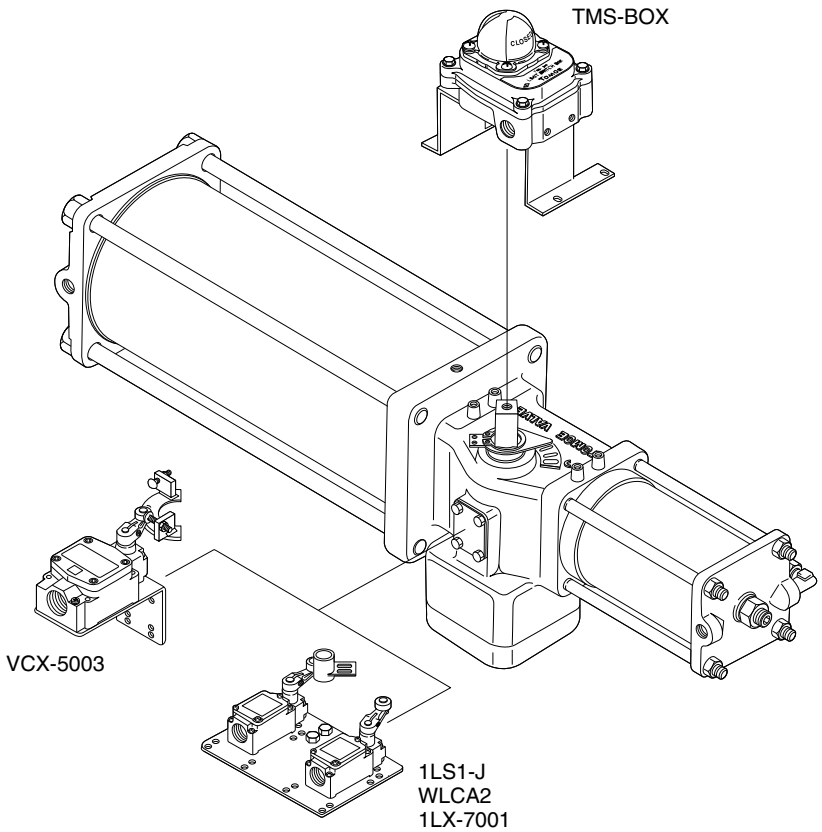

TG-S Proximity switches

■Purpose

Proximity switches are used to convert the valve position (full close, full open, half open) into electric signals for lamp indication at a remote location.

■Standard specifications

Product	M18 shielded type (Can be embedded in metal.)	M18 non-shielded type (Cannot be embedded in metal.)	M30 shielded type (Can be embedded in metal.)
Type	E2E-X7D1-N	E2E-X14MD1	E2E-X10D1-N
Manufacturer	OMRON	OMRON	OMRON
With power source	DC 2-wire system	DC 2-wire system	DC 2-wire system
Motion mode	NO	NO	NO
Detecting distance	0 to 5.6mm	0 to 11.2mm	0 to 8mm
Object to be detected	Magnetic metal (stainless steel possible)	Magnetic metal (stainless steel possible)	Magnetic metal (stainless steel possible)
Power source voltage	DC12 to 24V	DC12 to 24V	DC12 to 24V
Current consumption	3 to 100mA	3 to 100mA	3 to 100mA
Class of insulation	IP67	IP67	IP67
Operating temperature	−25 to 70 degrees C	−25 to 70 degrees C	−25 to 70 degrees C
Connection	Cord draw type (2m)	Cord draw type (2m)	Cord draw type (2m)
Contacts	On or off detection with one Two for both on and off detection	On or off detection with one Two for both on and off detection	On or off detection with one Two for both on and off detection
Weight	0.13kg	0.13kg	0.18kg

Remark: The above are standard TOMOE-compatible proximity switches. It is also possible to install limit switches other that those listed above such as a DC 3-wire, AC 2-wire, AC/DC 2-wire or connector-type proximity switch. For details, please consult us.

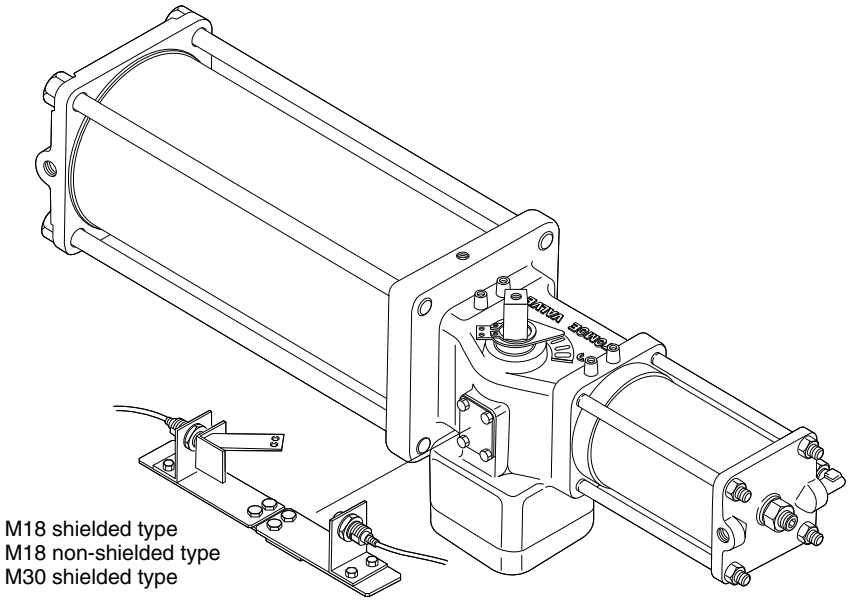

M18 shielded type
M18 non-shielded type
M30 shielded type

TG-S Positioners

■Purpose

A positioners are used for quick and accurate control of the valve opening angle with pneumatic signals or 4-20mA DC input signals from a control room or controller unit.

■Standard specifications

	Electro-Pneumatic, analog	Electro-Pneumatic, analog	Electro-Pneumatic, digital (smart)	Pneumatic-Pneumatic
Type	TCE2000	TP8100	AVP300	IP5100
Manufacturer	Tomoe	Tomoe	Azbil	SMC
Input signal	4 to 20mA	4 to 20mA	4 to 20mA	0.02 to 0.1MPa
Resistance	250Ω (4 to 20mADC)	235±15Ω (4 to 20mADC)	300Ω (4 to 20mADC)	—
Supply air	0.14 to 0.7MPa	0.14 to 0.7MPa	0.14 to 0.7MPa	0.14 to 0.7MPa
Output flow rate	180L/min. or more (SUP=0.4MPa)	200L/min. or more (SUP=0.4MPa)	250L/min. or more (SUP=0.4MPa)	200L/min. or more (SUP=0.4MPa)
Air consumption	Within 11L/min. (SUP=0.4MPa)	Within 11L/min. (SUP=0.4MPa)	Within 10L/min. (SUP=0.4MPa)	Within 11L/min. (SUP=0.4MPa)
Operating temperature	−20 to 83 degrees C (Non explosion-proof) −20 to 60 degrees C (Explosion-proof type d2G4)	−20 to 8 degrees C (Non explosion-proof) −20 to 60 degrees C (Explosion-proof type d2G4)	−40 to 80 degrees C (Non explosion-proof) −20 to 60 degrees C (Explosion-proof type d2G4)	−20 to 80 degrees C
Class of insulation	IP65, ExdⅡBT6X	IP67, ExdⅡBT5	IP65 (option: Exd2CT6X)	—
Air connection port size	Rc1/4	Rc1/4	Rc1/4	Rc1/4
Conduit entry	2-G1/2	2-G1/2	2-G1/2	—
Sensitivity	Within 0.5%FS	Within 0.5%FS	Within 1%FS	Within 0.5%FS
Repeatability	Within ±1.5%FS	Within ±2%FS	Within ±1%FS	Within ±2%FS
Hysterisis	Within 1%FS	Within 1%FS	Within 1%FS	Within 1%FS
Option	—	—	Analog signal (4 to 20 mA) output Any special opening setting Supports field bus.	—
Weight	2.3kg	2.6kg	2.8kg	1.2kg

Remark: The above are standard TOMOE-compatible positioners. It is also possible to install positioners other that those listed above. For details, please consult us.

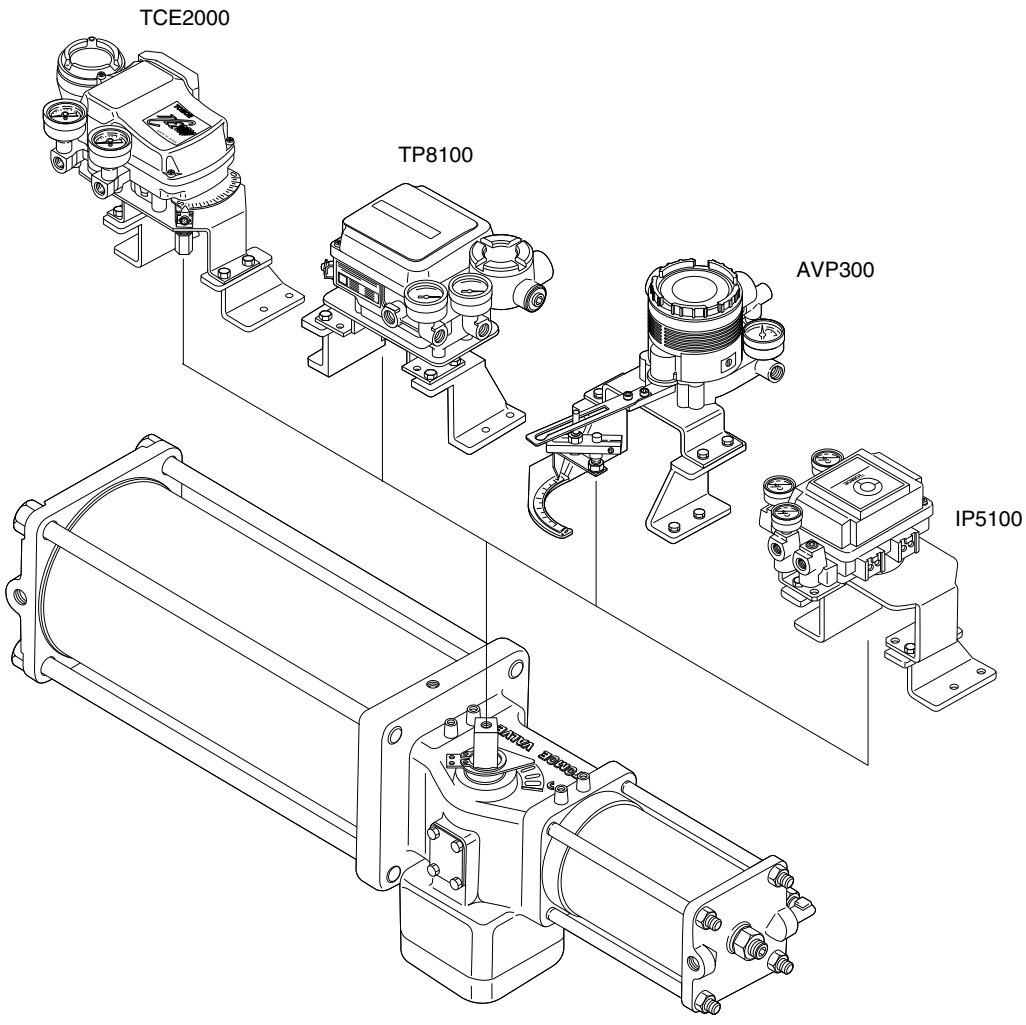

TG-S Manual operation unit

■Purpose

The operation unit is for manual operation of the pneumatic cylinder when air supply fails.

■Standard specifications

	Function	Type	Applicable cylinder	Remarks
1	Manual operation unit	Screw handle	Single acting type TG-S	(1) Attach and detach the lock screw exactly before and after operation. (2) Adjustment is possible in the full close position.

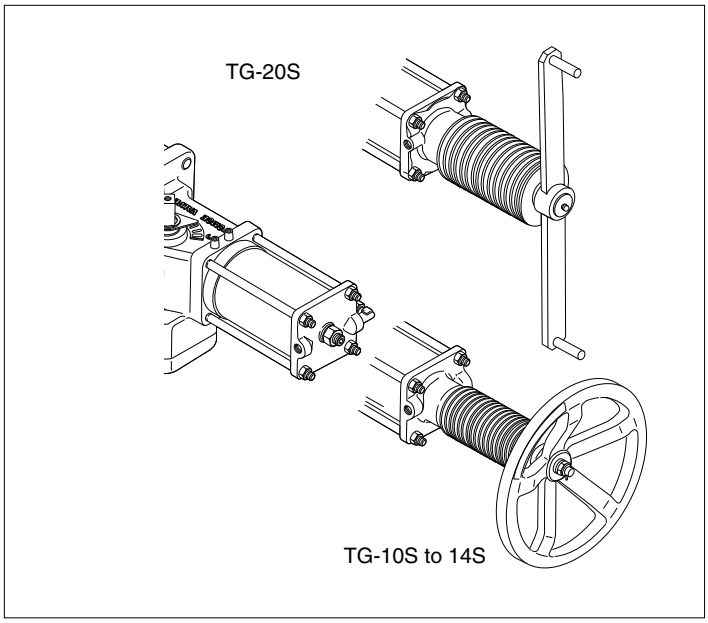

TG-S Stroke adjusters

■Purpose

The stroke adjuster sets the valve opening freely from the outside.

■Standard specifications

Function	Type	Applicable cylinder	Remarks
Free opening unit	Side adjust screw	(A)Double acting type T-matic	After attaching a long adjustment bolt to the cylinder cover, attach the cover of the aluminium casing.
Adjust screw	Side adjust screw	(B)Double acting type TGA-100 (C)Single acting type T-matic	Attach long adjusting screws and lock nut to the cylinder cover.

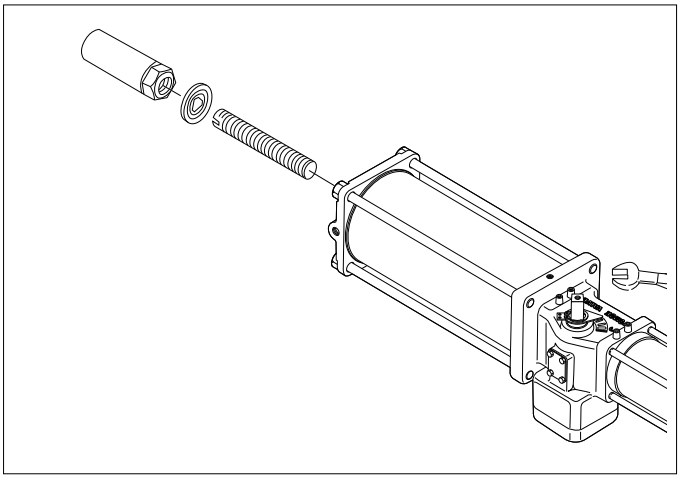

TG-S Speed controllers

■Purpose

For double-acting cylinders, the speed controller is used as meter out (exhaust throttle) and for single-acting cylinders, it is used as meter in (suction throttle).

■Standard specifications

Type	AS3000-03	AS4000-04
Manufacturer	SMC	SMC
JIS symbol	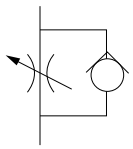	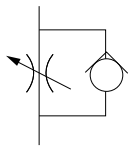
Applicable cylinder type	TG-10S to 14S	TG-20S
Needle revolution	8 rotations	8 rotations
Adjustable range	5 to 15 secs.	5 to 15 secs.
Operating temperature	—5 to 60 degrees C	—5 to 60 degrees C
Air connection port size	Rc3/8	Rc1/2
Attachement	Install to cylinder air connect port	Install to cylinder air connect port
Weight	0.13kg	0.21kg

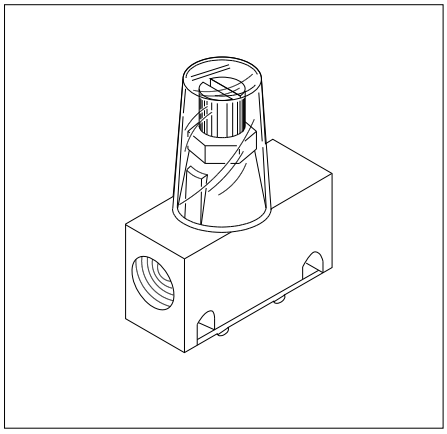

Remark: The above are standard TOMOE-compatible speed controllers. It is also possible to install speed controllers other that those listed above. For details, please consult us.

TG-S Silencers

■Purpose

Silencers eliminate noise at the exhaust ports on various kinds of pneumatic accessories.

■Standard specifications

Type	AN20-02	AN30-03	AN40-04
Manufacturer	SMC	SMC	SMC
JIS symbol	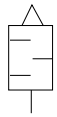	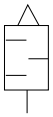	
Effect of muffing	30dB (A)	30dB (A)	30dB (A)
Operating temperature	5 to 60 degrees C	5 to 6 degrees C	5 to 60 degrees C
Port size	Rc1/4	Rc3/8	Rc1/2
Attachement	Screw into exhaust port of solenoid valve.	Screw into exhaust port of cylinder and solenoid valve.	Screw into exhaust port of cylinder and solenoid valve.
Weight	0.02kg	0.03kg	0.04kg

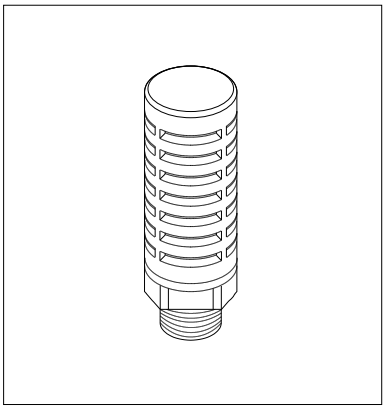

Remark: The above are standard TOMOE-compatible silencers. It is also possible to install silencers other that those listed above. For details, please consult us.

TG-S Lock-up valves

■Purpose

When air supply fails, the lock-up valve automatically stops the line until pressure is restored and keeps the operating unit of the cylinder at the stay-put position.

■Standard specifications

Type	IL201-02
Manufacturer	SMC
JIS symbol	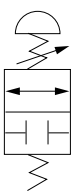
Effective sectional area	17mm^2
Operating temperature	—5 to 60 degrees C
Air connection port size	Rc1/4
Signal pressure connection port	Rc1/4
Weight	0.43kg

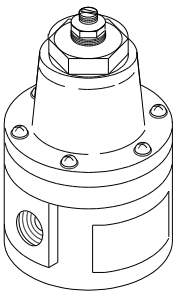

Remark: The above are standard TOMOE-compatible lock-up valves. It is also possible to install lock-up valves other that those listed above. For details, please consult us.

Example of standard air circuit for on/off operation (single-acting type)

Shown below are examples of standard circuits to operate the valve automatically to the safe side of open or close when the operating air supply or power supply fails in the middle of operation.

1 Butterfly valve closes when air supply falls.
(Opened by pressure when solenoid valve is energized.)
Butterfly valve closes when power supply falls.
(Opened by pressure when solenoid valve is energized.)

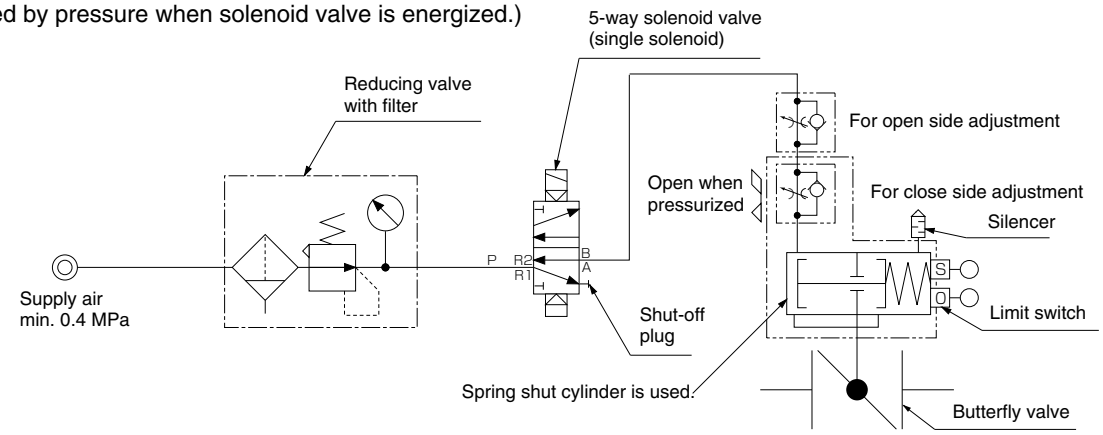

2 Butterfly valve opens when power supply falls.
(Closed by pressure when solenoid valve is energized.)
Butterfly valve opens when air supply falls.
(Closed by pressure when solenoid valve is energized.)

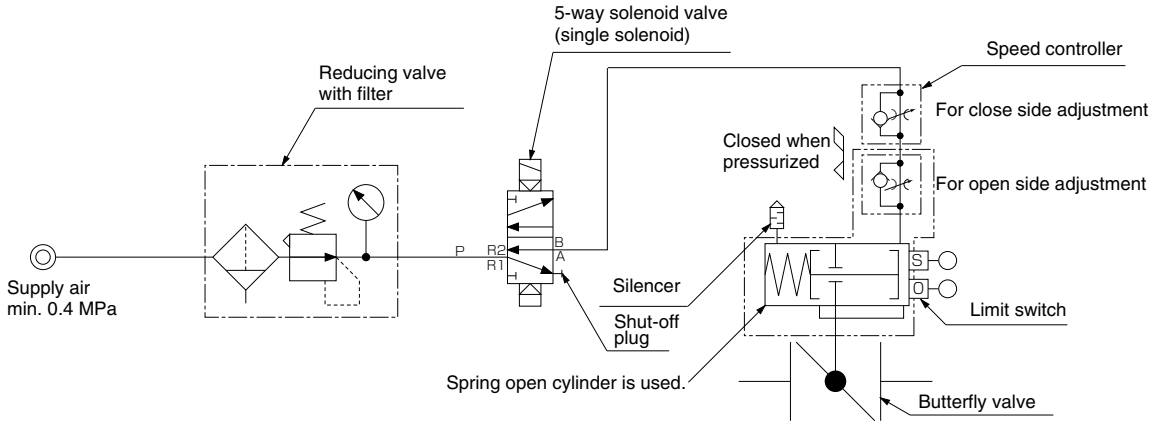

Example of standard air circuit for control operation (single-acting type)

Shown below are examples of standard circuits in which the P/P or E/P positioner is attached to the butterfly valve driven by a single-acting pneumatic cylinder to adjust valve opening exactly and quickly in proportion to the signals transmitted by a local controller or from a remote control room. This will also detect the open/close position of the valve by a limit switch which sends feedback of the electric signals to the control room. When the operating air supply or power supply fails, the valve is automatically operated to the safe side of open or close.

3 Direct action
Butterfly valve closes when signal increases.
Butterfly valve opens when signal decreases.

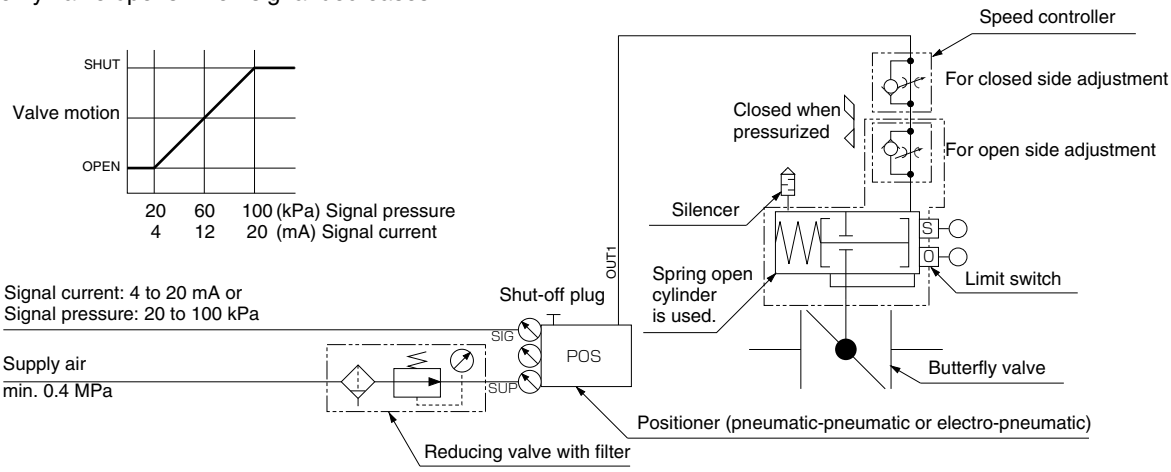

→Butterfly valve opens when air supply fails.

4 Reverse action
Butterfly valve opens when signal increases.
Butterfly valve closes when signal decreases.

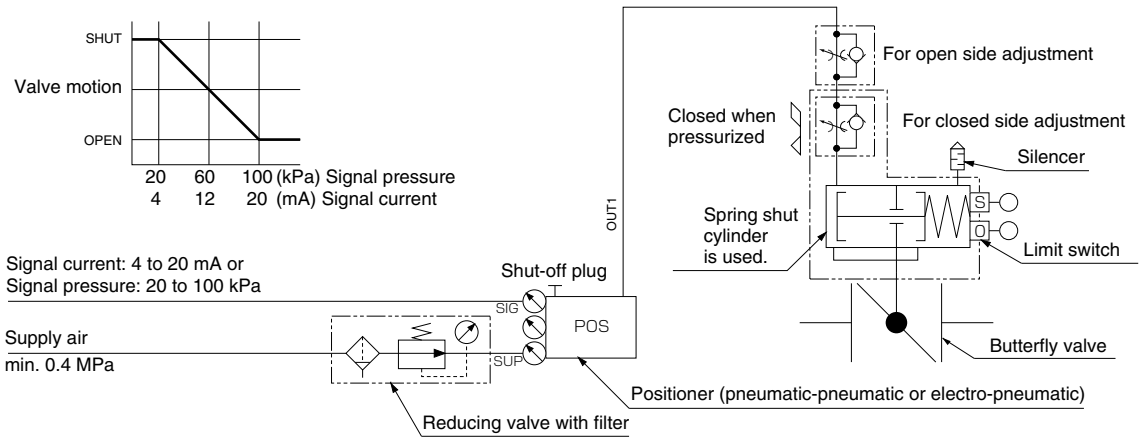

→Butterfly valve closes when air supply fails.

3C

The 3C actuator is a vertical cylinder suitable for installations where space is limited. The piston rotates while moving vertically which causes the output shaft to rotate at the same time to open and close the valve. Air control devices such as limit switches and solenoid valves, and manual devices can be installed.



3C Specifications							
	AT5-80	AT5-100	AT5-120	AT5-150	AT5-180	AT5-220	AT5-250
Torque (N·m) (when 0.4MPa)	52	125	180	350	580	1320	1650
Supply pressure (MPa)	0.4 to 0.7						
Body shell max (MPa)	1.0						
Port size	Rc1/4			Rc3/8		Rc1/2	
Rotating angle	90°						
Operating fluid	Dry air						
Working temperature range (degrees)	−15 to 80						
Rotating speed range	5 to 15 secs.						10 to 20 secs.
Weight (kg)	3.3	5.5	8.7	15.4	28.0	47.0	70.0
Painting	Epoxy primer finish (Munsell N7)						

Diaphragm

This type of actuator is used exclusively for rotary valves. The edge of the diaphragm is free, and by attaching a ring, the linear motion of the actuator is converted to a smooth rotational motion in the valve stem. Model 280 is a multiple spring type with four or six small internal springs, while Model 400 is a single spring type with one large spring. Both models are actuators that feature friction-free operation, excellent efficiency, and high output.

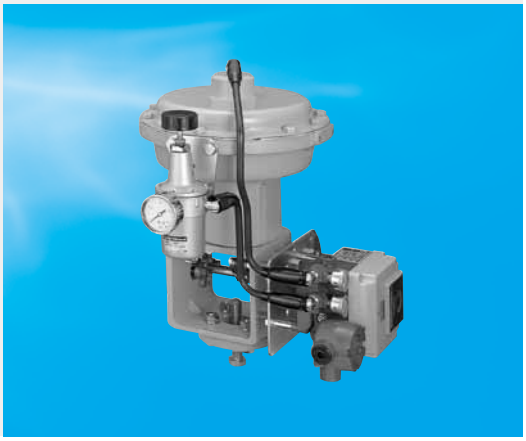

Diaphragm Specifications		
Type	280	400
Structure	Floating system	
Diaphragm area (cm^2)	350	725
Max. supply pressure (KPa)	270	
Spring range (KPa)	60 to 220(SUP.270)	60 to 190 (SUP.270)
Max. stroke (mm)	39.6	58.3
Applicable valve size (kg)	28.0 (Without top handle) (including bracket)	57.1 (Without top handle) (including bracket)

Remark: For both types 280 and 400, the manual handle (top handle) is available as an option.

Diaphragm Operation principle

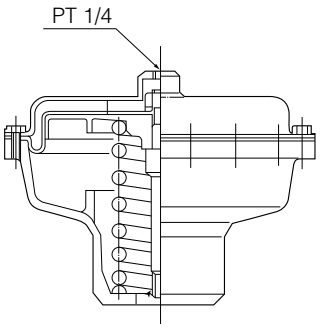

This type is exclusively used for rotary valves. The nose of the diaphragm is free, and by attaching a ring, linear motion of the actuator is smoothly converted to rotational motion of the valve stem. Type 280 is composed of four or six small springs, while Type 400 is a single spring type with one large spring. Both models feature friction-free operation, excellent efficiency, and high output.

Hydraulic Cylinder

This type of cylinder is compatible with hydraulic systems used, for example, in marine vessels. While compact, it outputs by converting hydraulic energy into a high torque that is proportional to the pressure.



Hydraulic Cylinder Specifications	
Standard allowable pressure	105bar
Maximum allowable pressure	210bar
Test pressure	1.5 x operation pressure
Torque range	5.1 to 5418.4 kgfm (for 210bar)
Working temperature range	−20 to 80 degrees C
Operating oil viscosity	15 to 200cst
Rotating angle	90 degrees

Manual Actuators

Manual actuators consist of three types: the lock lever, the worm gear and the center handle type. The design depends on the model of valve that it will be used with. The photographs below show the manual actuators for the 700G.



Lock lever type

Opening and closing operations are conducted by merely turning the lever 90 degrees. The 10-stage locking mechanism allows flow rate control.

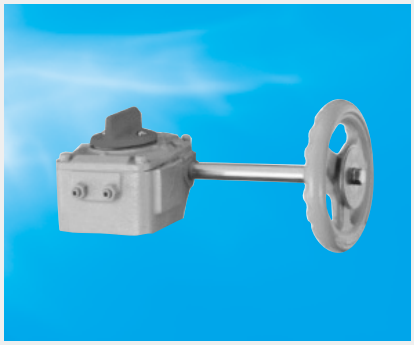

Worm gear type

The worm wheel works as a gear reducer to greatly reduce the torque required for extremely light open and close operations. The valve opening angle can be set as desired for completely stepless control of the flow rate.



Center handle type

The planetary gear works as a gear reducer to greatly reduce the torque required for extremely light open and close operations. The valve opening angle can be set as desired for completely stepless control of the flow rate.

Options

Long-neck and long handle shaft

Installs to gear boxes or extends handle shafts.

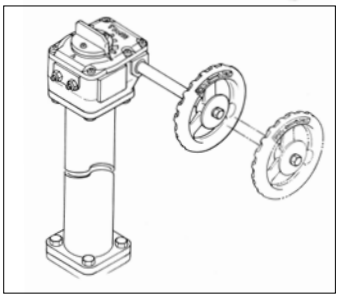

Degree of open output

By installing a limit switch, a fully open or fully closed signal is output.

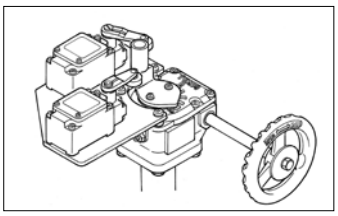

Screw indicator

Tells, right at the device, how open it is even if the handle shaft is extended.

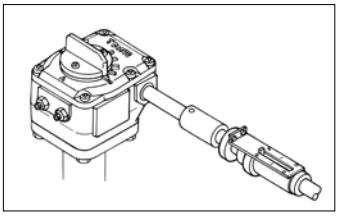

Chain wheel

Valves in high or difficult to reach places can be operated by a chain.

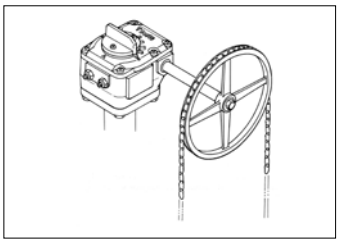

Handle lock

Prevents handle rotation caused by vibration and can maintain a mid-way open position.

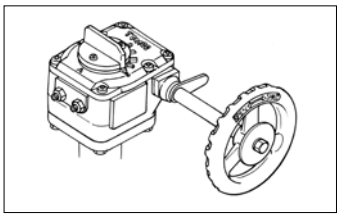

Reverse operator

Enables operation with the handle shaft placed on the opposite side.

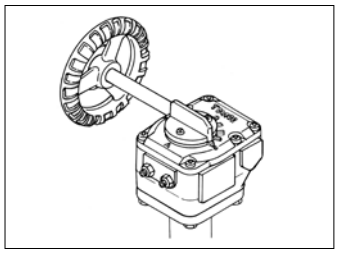

Post indicator

Degree of opening can be verified at a glance.

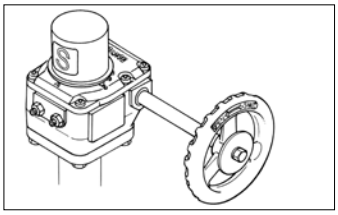

Indicator for thermal retention enclosures

Indicator allows verification even if the gear box is enclosed for thermal insulation.

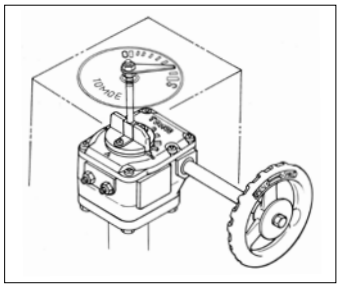

Options in the diagrams above are shown with the 2U worm gear. For details, please consult us.

Actuator
New ELMY 4I
New MICOM ELMY II 4I
PMK-SRF 4K
SRJ 4J
LTKD 4L
New T-DYNAMO 7E/7F/7G
TGA 3A
TG-S 3K/3U
3C
Diaphragm 6X/6W/6Z/6A/6B
Hydraulic cylinder 3H
Manual Actuators 1T/1J/2U/2I/2S/2G/2R

MEMO

Data

Valve Types and Features	491
Valve Sizing Procedures	492
Cv Value Calculation	493
Conversion Formula for Reference	495
Guidance for Vacuum Use	496
Velocity Calculation	497
Noise Prediction Methods and Countermeasures	498
Calculation of Estimated Cavitation	503
Face to Face Dimensions	507
Unit Conversion	508
Physical Properties	509
Flange Standards	517

Valve Types and Features

The three basic functions of valves are: 1. to stop flow, 2. to keep a constant direction of flow, and 3. to regulate the flow rate and pressure. To select the correct valve to fulfill these functions properly, an outline of the different types of valves and their features is given below.

Butterfly valve

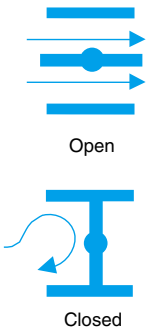

- Valve shaped like a butterfly.
- Tight shut-off and can be used as a control valve.
- Little resistance to flow (allows smooth flow).
- Optimal for automated operation with a low operating torque and 90 degrees operating angle.
- Lightweight and compact (large diameter models are also available).

Check valve

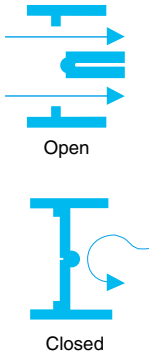

- For use when flow is only in one direction.
- Lightweight disc allows vertical installation.
- High operating speed prevents water hammer.

Gate valve

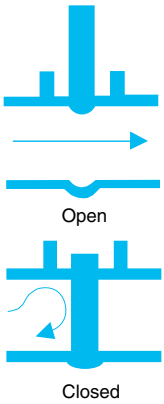

- Like its name implies, the gate is lowered to cut off the path of flow.
- For use as an on/off valve (not suitable as a control valve).
- Little resistance to flow when fully open (allows smooth flow).
- Long stroke requires time to open and close; not suitable for quick operation.

Globe valve

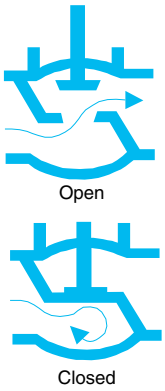

- The glove-shaped body controls the fluid into a S-shaped flow.
- Tight shut-off and can be used as a control valve.
- Large resistance to flow (does not allow smooth flow).
- Much power is required to open and close the valve (not suitable for large sizes).

Ball valve

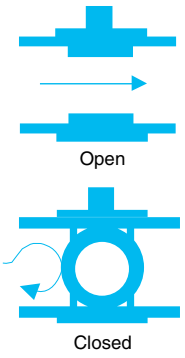

- Valve stopper is ball-shaped.
- For use as an on/off valve (not suitable as a control valve).
- Little resistance to flow when fully open (allows smooth flow).
- Optimal for automated operation with a 90 degrees operating angle.
- Advanced technology is required to manufacture ball.

Comparison of butterfly valves with other valves (using 100mm diameter TOMOE 700G model valve)

Butterfly valve and globe valve

Item	Butterfly valve	Globe valve
Pressure loss(ξ)	0.3	1.5
Flow characteristics	Equal %	Equal %
Rangeability	10:1	30:1

Butterfly valve and ball valve

Item	Butterfly valve	Ball valve
Pressure loss(ξ)	0.3	0.05
Flow characteristics	Equal %	Quick open
Rangeability	10:1	3:1

Butterfly valve and gate valve

Item	Butterfly valve	Gate valve
Pressure loss(ξ)	0.3	0.2
Flow characteristics	Equal %	Quick open

Comparison of Cv value (Butterfly valve=1)

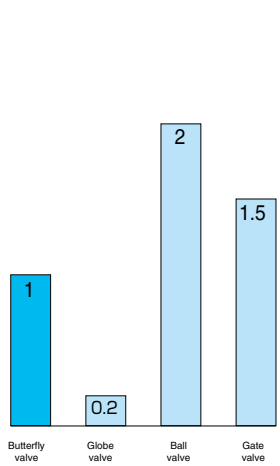

Comparison of pressure loss (Butterfly valve=1)

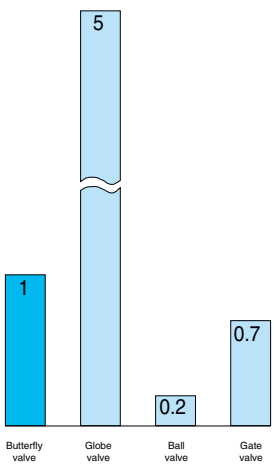

Inherent flow characteristics

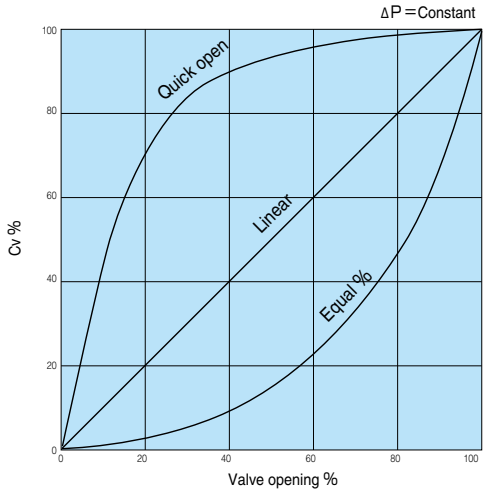

Valve Sizing Procedures

It is essential to understand the valve sizing formula and selection procedure when determining the size of a valve. The following is the proper selection procedure. The valve sizing calculation is based on ISA.

1. Judge if the flow condition is subcritical or critical based on the given flow condition.

2. Calculate the Cv value by putting the data into an appropriate formula.

3. Select the size of the valve using the Cv value chart. Consider the following points when sizing the valve.
   ① A proper adjustment of the Cv calculation should be made based on the piping adjustment coefficient Fp if a valve is located between reducers.
   ② If the result of the Cv calculation is over 80% compared to the full Cv value, select a valve one size larger.
   Example: For fresh water with P1 = 0.3 MPa, P2 = 0.25 MPa, flow rate = 100 m3/h, the calculated Cv will be 164. If 80 mm, 507V is selected, the rated Cv is 176. The calculated Cv (164) is over 80% of rated the Cv (176) in this case. We recommend 100 mm, 507V.
   ③ If no ΔP is given, 5 to 10% of the pump outlet pressure should be used as the assumed ΔP for valve sizing.

Cv Value Calculation

Cv value calculation

Fluid		Pressure conditions	Formula
Liquid	Volume flow rate	Sub critical $\Delta P < F_L^2 (\Delta PS)$	$Cv = 11.6q\sqrt{\frac{Gf}{\Delta P}}$
		Critical $\Delta P \geqq F_L^2 (\Delta PS)$	$Cv = 11.6\frac{q}{F_L}\sqrt{\frac{Gf}{\Delta PS}}$
	Mass flow	Sub critical $\Delta P < F_L^2 (\Delta PS)$	$Cv = \frac{11.6W}{\sqrt{Gf\Delta P}}$
		Critical $\Delta P \geqq F_L^2 (\Delta PS)$	$Cv = \frac{11.6W}{F_L\sqrt{Gf\Delta PS}}$
Gas	Volume flow rate	Sub critical $\Delta P < F_L^2 \frac{P_1}{2}$	$Cv = \frac{Q}{3.01}\sqrt{\frac{GT}{\Delta P\ (P_1+P_2)}}$
		Critical $\Delta P \geqq F_L^2 \frac{P_1}{2}$	$Cv = \frac{Q\sqrt{GT}}{2.62\,F_L \cdot P_1}$
	Mass flow	Sub critical $\Delta P < F_L^2 \frac{P_1}{2}$	$Cv = \frac{4627W}{\sqrt{\Delta P\ (P_1+P_2)\ Gf}}$
		Critical $\Delta P \geqq F_L^2 \frac{P_1}{2}$	$Cv = \frac{5343W}{F_L \cdot P_1\sqrt{Gf}}$
Saturated vapour	Mass flow	Sub critical $\Delta P < F_L^2 \frac{P_1}{2}$	$Cv = \frac{7098W}{\sqrt{\Delta P\ (P_1+P_2)}}$
		Critical $\Delta P \geqq F_L^2 \frac{P_1}{2}$	$Cv = \frac{8206W}{F_L \cdot P_1}$
Super-heated vapour	Mass flow	Sub critical $\Delta P < F_L^2 \frac{P_1}{2}$	$Cv = \frac{7098W\ (1 + 0.00126Tsh)}{\sqrt{\Delta P\ (P_1+P_2)}}$
		Critical $\Delta P \geqq F_L^2 \frac{P_1}{2}$	$Cv = \frac{8206W\ (1 + 0.00126Tsh)}{F_L \cdot P_1}$

Symbol Legend

Symbol
Cv: Valve flow coefficient
F_L: Pressure recovery coefficient
G: Specific gravity (Air = 1)
Gf: Specific gravity at valve-inlet temperature (Water = 1 at 15 degrees C)
P1: Valve-inlet pressure (kPaA)
P2: Valve-outlet pressure (kPaA)
△P: Pressure difference across valve [P1 – P2] (kPa)
Pc: Critical pressure (kPaA)
Pv: Saturated vapour pressure of liquid at valve-inlet temperature (kPaA)
△PS: Max. DP for sizing

- Working conditions: Outlet pressure is higher than vapour pressure.

$\triangle PS = P_1 - Pv$ (kPa)

- Working conditions: Outlet pressure is equal to or lower than vapour pressure.

$DPS = P_1 - \left(0.96 - 0.28\sqrt{\frac{Pv}{PC}}\right) Pv$ (kPa)

q: Volume flow rate of liquid (m^3 / h)
Q: Volume flow rate of gas [At 15 degrees C, 1 atm] (m^3 / h)

$= Nm^3/h \times \frac{288}{273}$

T: Fluid temperature [273 + degrees C] (K)
Tsh: Degree of superheat (degrees C)
= T – Tc
Tc: Saturated vapour temperature at valve-inlet pressure (K)
W: Mass flow rate (T / h) = (1,000 kg / h)

Calculation for piping geometry factor

$$Fp = \left\{1 + \frac{\left\{0.5\left(1 - \left(\frac{d}{D1}\right)^2\right)^2 + 1.0\left(1 - \left(\frac{d}{D2}\right)^2\right)^2\right\} \times \left(\frac{Cv}{d^2}\right)^2}{0.00214}\right\}^{-\frac{1}{2}}$$

Fp: Piping geometry factor
Cv: Valve flow coefficient
d: Valve size (mm)
D1: Inlet pipe size (mm)
D2: Outlet pipe size (mm)

Calculation for modified Cv value

CvR = Fp Cv

CvR : Revised Cv value

Conversion Formula for Reference

Pressure loss coefficient ζ↔ Cv value

$$\zeta = 21.38 \times \frac{D^4}{Cv^2}$$

$$Cv = 4.624 \times \frac{D^2}{\sqrt{\zeta}}$$

D: Inside diameter of pipe (cm)

Cv value → Kv value

Kv value is used in Europe.
It shows the flow rate (m^3/h) of drinking water at a pressure of 1 bar and temperature of 5—30 degrees C.

$$Kv = \frac{Cv}{1.167}$$

Pressure loss coefficient ζ→ Kv value

$$Kv = 4.0 \times \frac{D^2}{\sqrt{\zeta}}$$

D: Inside diameter of pipe (cm)

Cv value → Av value

Av value is a SI unit.

$$Av = \frac{24}{10^6} \times Cv$$

Length of pipe

$$L = 8.5 \times \frac{D^{4.87}}{Q^{1.85}} \times \Delta P$$

D: Inside diameter of pipe (cm)
Q: Flow rate (ℓ/min)
△P: Pressure difference (kPaA)

Reference: For performance appraisal of fire safety and disaster prevention equipment, the equivalent pipe length is measured based on the flow rates in the table below.

Nominal dia.	Flow rate (ℓ/min)
50mm	800
65mm	900
80mm	1350
100mm	2100
125mm	3300
150mm	4800
200mm	8500
250mm	13000
300mm	19000

Pressure difference

$$\Delta P = \frac{1}{102} \cdot \zeta \cdot \frac{V^2}{2g} \gamma$$

ζ: Pressure loss coefficient
△P: Pressure difference (kPa)
g: Acceleration of gravity 9.8 m/sec^2
γ: Specific gravity (water = 1000) (kg/m^3)
V: Flow velocity (m/sec)

Formula for leak rate

①Find leak rate for seat leakage from the graph for the allowable seat leak standard by model
②Find flow conditions for:
P1: valve inlet pressure (kPaA)
P2: valve outlet pressure (kPaA)
△P: differencial pressure, P_1-P_2 (kPa)
Gf: density at inlet side (density for water in case of liquid, for air in case of gas)
G: density
T: fluid temperature (K)
Cv: factor for value at full open

In case of liquid

$$q = \frac{A}{11.6} \times \frac{1}{\sqrt{\frac{Gf}{\Delta P}}}$$

In case of gas

$$Q = \frac{3.01A}{\sqrt{\frac{GT}{\Delta P\ (P_1 + P_2)}}}$$

q = calculated leak rate for liquid (m^3/h)
Q = calculated leak rate for gas (m^3/h)
A = seat leak (1×10^{-5}Cv,1×10^{-4}Cv)

→ (sample) Cv value for 302Y 100mm = 432
Seat leak rate standard at temperature 150°C and valve inlet press 1.0Mpa = 1×10^{-5}
A = $1\times10^{-5}\times432 = 0.00432$

Guidance for Vacuum Use

Valve type	Nominal dia. range (mm)	Usable vacuum (kPaA)			Valve seat leak (kPa · ℓ/h)	Remark
		10 to 50 degrees C	50 to 80 degrees C	80 to 100 degrees C		
304A	80-200	0.133	0.133	1.33	1.0	
	250-300	1.33	1.33	2.66	8.0	
	350-600	2.66	3.99	5.32		
302A	80-200	1.33	1.33	2.66	8.0	
	250-300	1.33	3.99	5.32	14.0	
	350-600	2.66	3.99	5.32		Special gland structure required.
302Y	40-200	1.33	1.33	2.66	14.0	
	250-300	2.66	3.99	5.32		
337Y	50-200	1.33	1.33	2.66	14.0	
	250-300	2.66	3.99	5.32		
304Y	40-200	1.33	1.33	2.66	1.0	
	250-300	2.66	3.99	5.32	8.0	
846T	65-200	0.133	1.33	2.66	0.3	Leakage increases if heat cycle and open/close frequency is high.
847T	50-300					
731P 732P	50-200	0.133	1.33	13.3	0.3	
	250-300	0.133	2.66	26.6	3.0	
	350-600	2.66	13.3	N.A.	5.0	
700G	40-200	13.3	26.6	N.A.	3.0	
	250-300	26.6	53.2	N.A.	5.0	
	350-600	39.9	66.5	N.A.		
705G 704G	50-200	13.3	26.6	N.A.	3.0	
	250-300	26.6	53.2	N.A.	5.0	
	350-600	39.9	66.5	N.A.		
722F	125-300	26.6	53.2	N.A.	5.0	
	350-600	39.9	66.5	N.A.		
841T	250-300	26.6	53.2	N.A.	5.0	
	350-600	39.9	66.5	N.A.		
842T	350-600	39.9	66.5	N.A.		

Leak amounts are predicted values based on testing at room temperature with new valves. If you will be using in a range that exceeds the above table, please consult us.

Velocity Calculation

Velocity limitation

Velocity limitations are shown below:

Type of fluid		Velocity limitation (continuous operation)
Liquid	Replaceable rubber seat	3 m/s
	Vulcanized rubber seat	5 to 6 m/s
Gas, vapour		120 to 200 m/s
Steam	Saturated steam	50 to 80 m/s
	Superheated steam	80 to 120 m/s

* Velocity limitation varies depending on the valve models. Please consult us for further information.

Pipe line velocity calculation

For liquids

$$V=354\times\frac{Q}{D^2}$$

For gases and vapours

$$V=124.5\times\frac{Q(T+273)}{D^2\cdot P_2}$$

For steam

$$V=354\times\frac{Q\cdot U}{D^2}$$

Where:
V: Flow velocity (m/sec)
Q: Flow rate
Liquid (m^3/h)
Gas [At 15 degrees C, 101325 Pa] (m^3/h)

$$= Nm^3/h \times \frac{288}{273}$$

Steam (kg/h)
U: Specific volume of valve-outlet (m^3/kg)
D: Nominal size (mm)
P2: Valve-outlet pressure (kPaA)
T: Temperature (degrees C)

Noise Prediction Methods and Countermeasures

Noise measuring method

The following are methods recommended by ISA.

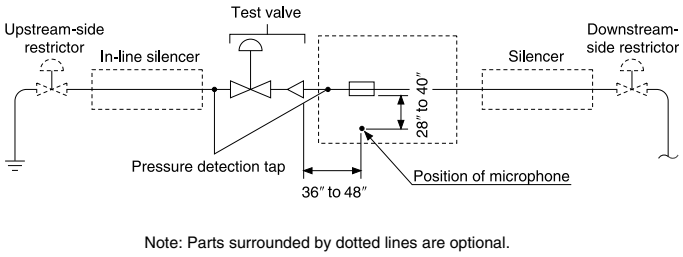

Fig. 1 Laboratory test unit by ISA-RP59.1

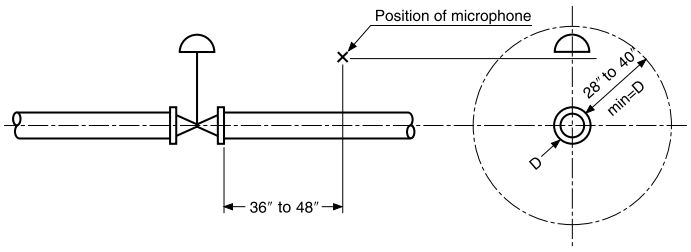

Fig. 2 Position of microphone in plant by ISA-RP59.2

Noise calculation formula for 507V and 508V Types

For gases

$$SP=-10.7+10Log(Cv\cdot FL\cdot P_1\cdot P_2)+18.5Log(D)-30Log(t/t40)+12Log(P_1/P_2-1.05)-10Log(no)+SG$$

For liquids

$$SP=10Log(Cv)+12Log(0.0102\times(P_2crit-P_2))+16Log(P_2-Pv)-10Log(no)+18.5Log(D)-30Log(t)+\divideontimes 26.5$$

Notes regarding liquids:

1. When the pressure difference across the valve $\triangle P$ (= $P_1 - P_2$) is smaller than 5% of P_1, the formula above cannot be applied.
2. For $0.7P_1 - P_2 \leqq 6.86$, substitute 0 dBA for 12Log (0.0102 × (P_2crit – P_2)) in the formula above, and also 12.7 for 26.5, the coefficient with *mark.

Where:

SP:	Noise value [sound pressure level at 91 cm]	(dBA)
Cv:	Flow coefficient in actual conditions	
P_1:	Valve upstream pressure	(kPaA)
P_2:	Valve downstream pressure	(kPaA)
F_L:	Pressure recovery coefficient (507V: 0.72)	
D:	Nominal pipe diameter	(mm)
t:	Pipe wall thickness	(mm)
t 40:	Pipe wall thickness of Sch #40	(mm)

no: Apparent valve orifice coefficient

50mm = 10	150mm = 18
80mm = 14	200mm to 400mm = 30
100mm = 16	

SG: Gas component modification coefficient

Saturated vapour = –2, overheated vapour = –3
Natural gas = –1, air = 0

P_2crit:	$P_1 - 0.3 (P_1 - Pv)$	(kPaA)
Pv:	Vapour pressure of liquid	(kPaA)

Noise calculation formula for valves other than 507V and 508V Types

Formulas are in accordance with those introduced by ISA.

For gases

$$SP=10Log(X\cdot\eta\cdot10^9\cdot Cv\cdot F_L\cdot2.105\cdot P_1\cdot P_2)-TL+SG+3$$

When liquid cavitation is generated

$$SP=10Log(Cv\cdot F_L)+8Log(0.1451\times(P_2crit-P_2))+20Log(0.1451\times(P_2-Pv))+33$$

Where:

SP: Noise value [sound pressure level at 91cm] (dBA)
Cv: Flow coefficient in actual conditions
F_L: Pressure recovery coefficient
P_1: Valve upstream pressure (kPaA)
P_2: Valve downstream pressure (kPaA)
m: Weight of pipe wall (kg/m^2)
η: Apparent valve orifice coefficient (butterfly valve: n = 1.4)
TL: Transmission loss → Except for valves releasing directly into the air.

$$=17Log_{10}\left(\frac{3\,072\times1.4m}{\sqrt{Cv\cdot F_L}}\right)-36\ (dBA)$$

*P^2crit: $P_1 - F_L^2\,(P_1 - Pv)$ (kPaA)
Pv: Vapour pressure of liquid (kPaA)
X: Conversion fraction of mechanical output

$$=\frac{P_1-P_2}{0.47P_1}$$ X = 1 even if X is bigger than 1.

SG: Gas property factor
η: Acoustical efficiency coefficient (Refer to page Data-11.)

Note: When the difference between Kc and F_L^2 exceeds 10% of Kc, substitute Kc for F_L^2.

Specific Gravity SG

Saturated steam	−2
Superheated steam	−3
Natural gas	−1
Hydrogen	−10
Oxygen	+0.5
Ammonia	−2
Air	0
Acetylene	−1
Carbon dioxide	+1
Carbon monoxide gas	0
Helium	−6.5
Methane liquid	−1
Nitrogen	0
Propane	+1
Ethylene	−1
Ethane	−1

Refer to the graph on left for fluids other than those above.

Specific Gravity SG

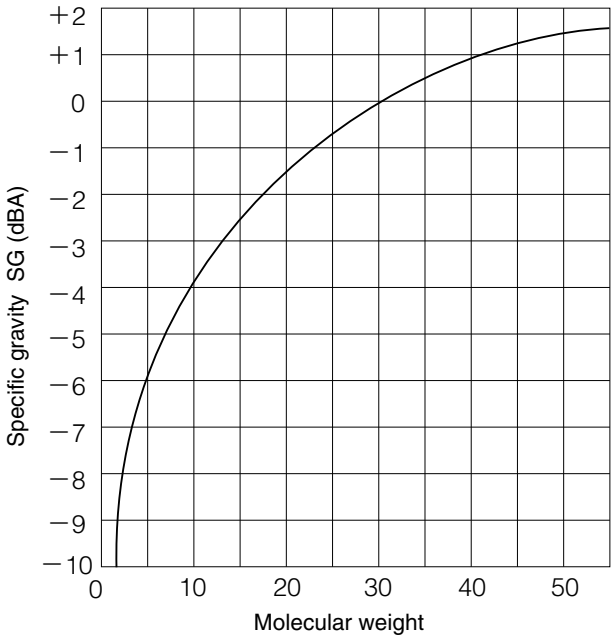

Weight of Pipe (m)

m=A×t

*A: Basic weight (kg/mm·m2)

[Steel pipe: 7.85, stainless steel pipe: 7.93]

t: Pipe thickness (mm)

(kg/m²)

Nominal dia.		outer diameter	SGP		STPY		Sch20		Sch40		Sch60		Sch80		Sch10S		Sch20S	
mm	inch	(mm)	thickness (mm)	m (kg/m²)	thickness (mm)	m (kg/m²)	thickness (mm)	m (kg/m²)	thickness (mm)	m (kg/m²)	thickness (mm)	m (kg/m²)	thickness (mm)	m (kg/m²)	thickness (mm)	m (kg/m²)	thickness (mm)	m (kg/m²)
40	1 1/2	48.6	3.5	27.5	—	—	—	—	3.7	29.0	4.5	35.3	5.1	40.0	2.8	22.0	3.0	23.6
50	2	60.5	3.8	29.8	—	—	3.2	25.1	3.9	30.6	4.9	38.5	5.5	43.2	2.8	22.0	3.5	27.5
65	2 1/2	76.3	4.2	33.0	—	—	4.5	35.3	5.2	40.8	6.0	47.1	7.0	55.0	3.0	23.6	3.5	27.5
80	3	89.1	4.2	33.0	—	—	4.5	35.3	5.5	43.2	6.6	51.8	7.6	59.7	3.0	23.6	4.0	31.4
100	4	114.3	4.5	35.3	—	—	4.9	38.5	6.0	47.1	7.1	55.7	8.6	67.5	3.0	23.6	4.0	31.4
125	5	139.8	4.5	35.3	—	—	5.1	40.0	6.6	51.8	8.1	63.6	9.5	74.6	3.4	26.7	5.0	39.3
150	6	165.2	5.0	39.3	—	—	5.5	43.2	7.1	55.7	9.3	73.0	11.0	86.4	3.4	26.7	5.0	39.3
200	8	216.3	5.8	45.5	—	—	6.4	50.2	8.2	64.4	10.3	80.9	12.7	99.7	4.0	31.4	6.5	51.0
250	10	267.4	6.6	51.8	—	—	6.4	50.2	9.3	73.0	12.7	99.7	15.1	118.5	4.0	31.4	6.5	51.0
300	12	318.5	6.9	54.2	—	—	6.4	50.2	10.3	80.9	14.3	112.3	17.4	136.6	4.5	35.3	6.5	51.0
350	14	355.6	7.9	62.0	7.9	62.0	7.9	62.0	11.1	87.1	15.1	118.5	19.0	149.2	—	—	—	—
400	16	406.4	7.9	62.0	7.9	62.0	7.9	62.0	12.7	99.7	16.7	131.1	21.4	168.0	—	—	—	—
450	18	457.2	7.9	62.0	7.9	62.0	7.9	62.0	14.3	112.3	19.0	149.2	23.8	186.8	—	—	—	—
500	20	508.0	7.9	62.0	9.5	74.6	9.5	74.6	15.1	118.5	20.6	161.7	26.2	205.7	—	—	—	—
550	22	558.8	—	—	9.5	74.6	9.5	74.6	15.9	124.8	22.2	174.3	28.6	224.5	—	—	—	—
600	24	609.6	—	—	9.5	74.6	9.5	74.6	17.5	137.4	24.6	193.1	31.0	243.4	—	—	—	—
650	26	660.4	—	—	12.7	99.7	12.7	99.7	18.9	148.4	26.4	207.2	34.0	266.9	—	—	—	—
700	28	711.2	—	—	12.7	99.7	—	—	—	—	—	—	—	—	—	—	—	—
750	30	762.0	—	—	12.7	99.7	—	—	—	—	—	—	—	—	—	—	—	—
800	32	812.8	—	—	12.7	99.7	—	—	—	—	—	—	—	—	—	—	—	—
850	34	863.6	—	—	12.7	99.7	—	—	—	—	—	—	—	—	—	—	—	—
900	36	914.4	—	—	12.7	99.7	—	—	—	—	—	—	—	—	—	—	—	—
1000	40	1016.0	—	—	15.9	124.8	—	—	—	—	—	—	—	—	—	—	—	—
1100	44	1117.6	—	—	15.9	124.8	—	—	—	—	—	—	—	—	—	—	—	—
1200	48	1219.2	—	—	15.9	124.8	—	—	—	—	—	—	—	—	—	—	—	—
1350	54	1371.6	—	—	15.9	124.8	—	—	—	—	—	—	—	—	—	—	—	—

η.....Acoustical efficiency factor

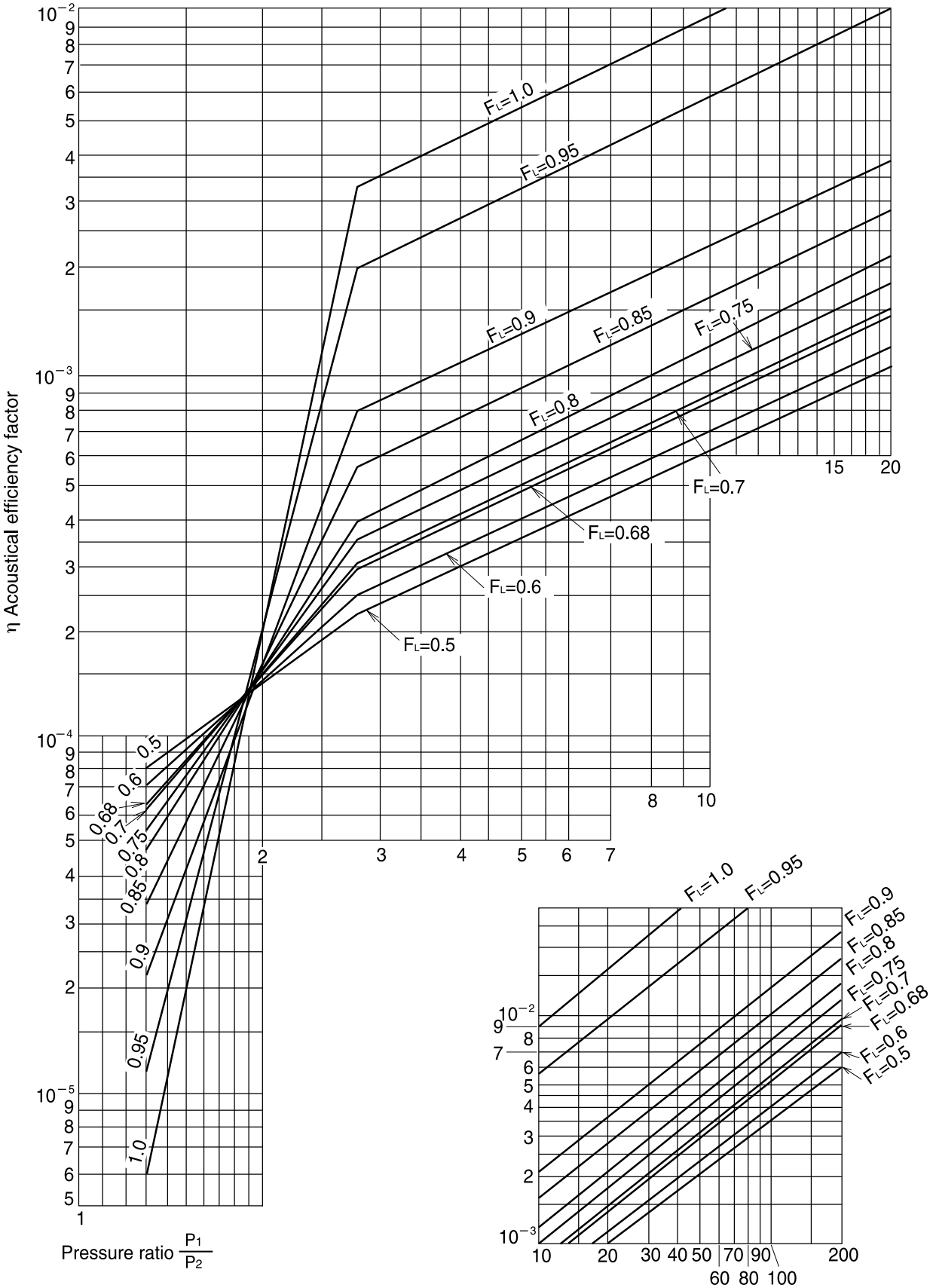

Valve noise reduction countermeasures

Aerodynamic noise is discussed here.
Noise can be reduced at the following points:

1 Noise source
2 Sound insulation

When selecting a countermeasure, controllability of process, initial cost and maintenance cost should be considered along with noise evaluation and noise type.
Various factors should be discussed between the customer and manufacturer. Please refer to the section "Calculation of Estimated Cavitation" and its countermeasure to reduce and prevent cavitation noise.

Countermeasures for noise source

There are two countermeasures for noise source.

(1) Adoption of low noise valve
① 507V and 508V types: Max. possible reduction is 10 dBA.
② Globe type low noise valve: Max. possible reduction is 15 to .30 dBA.

(2) Countermeasure at valve downstream side
① Insert resistance plate: Max. possible reduction is 15 dBA.

Example of low noise unit

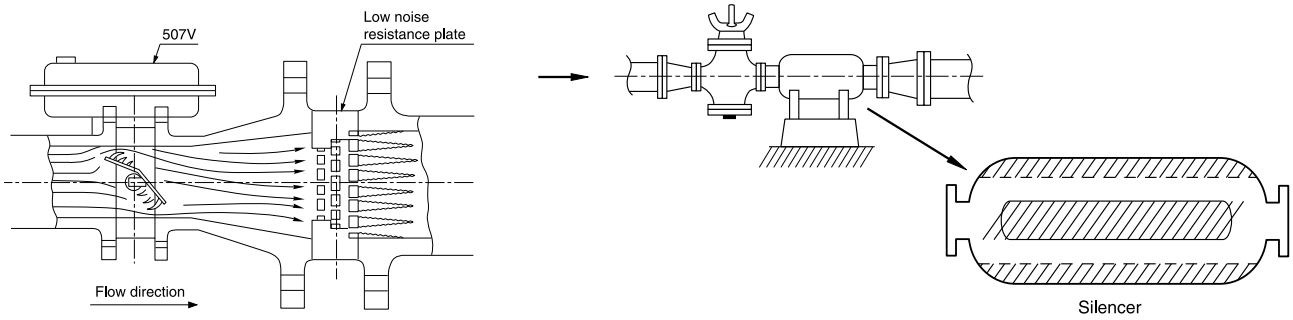

Sound insulation

This countermeasure does not reduce sound generation itself.

① Increase of pipe wall thickness (pipe schedule)
If it doubles, 5 dBA can be reduced.

② Soundproof lagging
In this countermeasure, piping is covered with layers of heat insulating materials (rock wool), lead plates, or iron plates, etc.

③ Prepare sound insulating box or wall
In order to reduce noise effectively, combine the various methods mentioned above.

Example: Pipe lagging materials

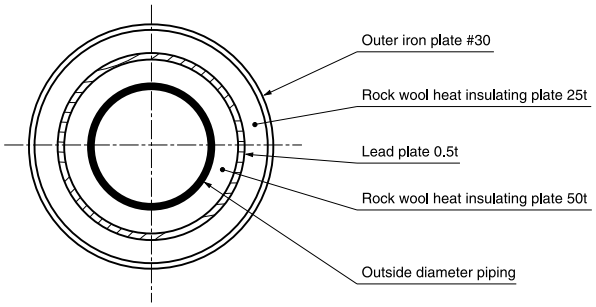

Calculation of Estimated Cavitation

Cavitation generation in butterfly valves

Cavitation is caused by low pressure areas in fluids. There are four causes of low pressure areas:

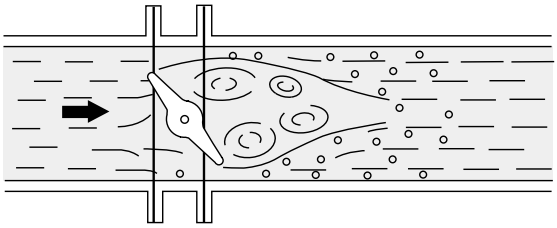

Fig. 1 Butterfly valves in nearly closed position

(1) Fluid is compressed, contraction flow exists, and flow velocity is increased. Then, pressure reduces.
(2) Low pressure area inside vortexes at valve-outlet side.
(3) Low pressure area is produced at the boundary between the fluid flowing at high velocity and objects such as the protruding portion of the valve-moulded surface, heads of taper pins, and hubs, etc.
(4) When the valve body or disc is vibrating at high frequency, the flow is disturbed and air bubbles form in the fluid.

The main causes of cavitation generation in butterfly valves are (1) and (2).
Thus, when the valve is nearly closed, the flow passes over the upper and lower edges of the disc as shown in figure. 1. The low pressure area can be caused when high flow velocity is created.

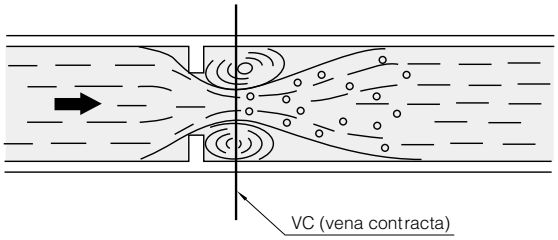

Fig. 2 Orifice flow

Figure 2 shows orifice flow corresponding to valve flow. The contracted part is called vena contracta. The relation between pressure and flow rate is shown in figure 3.

When fluids flow at high velocity and pressure drops below the saturated vapour pressure, air bubbles are produced. They are carried away toward the valve downstream side, and then, as surrounding water recovers its original pressure, air bubbles break instantaneously (approx. 1/1000 sec) and produce a strong impact force (200 to 500 atm). If air bubbles break near a substance, the impact applies great stress on both the outside and inside of the substance, and causes damage to the surface.

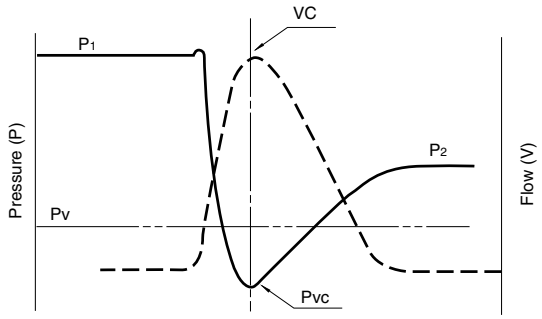

Fig. 3 Pressure and flow rate relation

Cavitation Generation Process in Butterfly Valves and Formula for Estimation

There are many stages in cavitation generation, as follows.

Flow conditions	Pressure conditions	Explanation
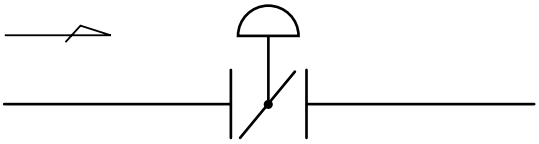 **Fig. 4 Normal flow** 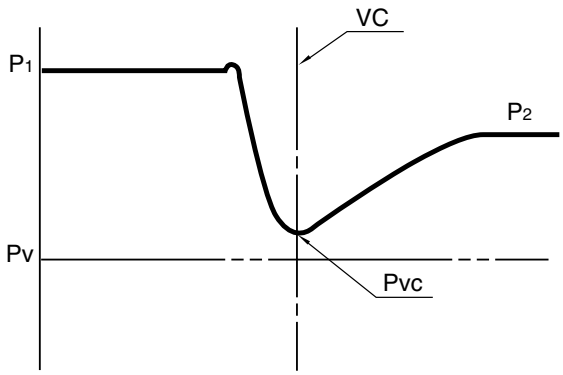 **Fig. 5 Cavitation flow** 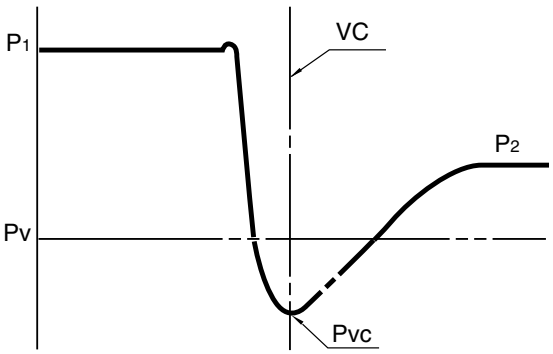 **Fig. 6 Flashing flow** 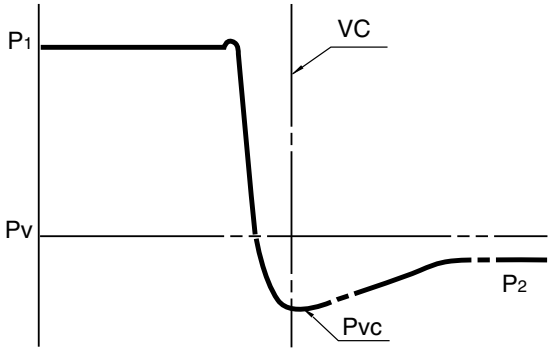 	$P_2 > Pv$ $Pvc > Pv$ $P_2 \leqq Pv$ $Pvc \leqq Pv$ $P_2 \leqq Pv$ $Pvc<Pv$	• Normal flow means turbulent flow. • In this stage, valve flow rate increases in proportion to the square root of the differential pressure. • Cavitation flow has three stages corresponding to the increase in differential pressure. a. Incipient cavitation stage b. Critical cavitation stage c. Full cavitation stage • Noise and oscillation may cause damage to the valve and downstream-side piping. • This occurs when pressure on the valve downstream side drops below the vapour pressure of the liquid. The fluid changes from liquid to gas, bringing rapid velocity change and volume expansion. These two factors are the main causes of a flashing noise. Flashing noise is of lower level than cavitation noise because gas acts as a cushion. • Attention must be paid to materials of the valve body (e.g., upgrading to stainless steel or chromium molybdenum steel) or the type of downstream-side piping.

Cavitation prediction

No cavitation

$\triangle P < Kc\ (P_1 - Pv)$

Incipient cavitation

$\triangle P = Kc\ (P_1 - Pv)$

Critical cavitation

$FL^2\ (P_1 - Pv) > DP > Kc\ (P_1 - Pv)$

Full cavitation

$\triangle P \geqq FL^2\ (P_1 - Pv)$

Flashing

$P_2 < Pv$
$FL^2\ (P_1 - Pv) > \triangle P$

$\triangle P$: Pressure difference across valve [$P_1 - P_2$] (kPa)
Kc: Cavitation coefficient
P_1: Valve-inlet pressure (kPaA)
P_2: Valve-outlet pressure (kPaA)
Pv: Vapour pressure of liquid (kPaA)
FL: Pressure recovery coefficient

Cavitation level and availability

Type of valve / Cavitation level	Rubber seated (700G, 702Z)	Double offset PTFE metal (302A, 304A) / 731P	507V / 508V
No cavitation	○	○	○
Incipient cavitation	○	○	○
Critical cavitation	△	○	○
Full cavitation	×	×	△ (Countermeasure is necessary)
Flashing	×	×	△ (Countermeasure is necessary)

○ — Suitable
△ — Consult us regarding usage.
× — Unsuitable

Note:
Normal operation material is stainless steel except when. critical cavitation is determined.

Cavitation reduction treatment

The following are the main methods for reducing or preventing cavitation damage to control valves.
(1) Install valves in series and control them. This method is for reducing the pressure load on each valve.
In this case, space valves out at least 4D (4 times the pipe diameter). The total Kc or F_L will be improved. In order to avoid full cavitation FL should satisfy the following condition:

$$FL > \sqrt{\frac{P_1 - P_2}{P_1 - P_V}}$$

In this case, however, valve control balance may be difficult.

Example:
When 507V and 508V types are nearly fully opened, FL is 0.72. When 507V and 508V types are installed in series, the combined F_L is 0.72 = 0.84 and the permissible pressure difference across the valve is increased by 36%. However, both valves should be operated under exactly the same conditions.

(2) Use a resistance plate (perforated orifice for pressure reduction) at the same time. If the flow rate fluctuates heavily, a good result cannot be expected.
(3) Use a valve with higher Kc or F_L .
(4) Lower the installation position of the valve; that is, lower the secondary pressure.
However, this method is hard to adopt in existing piping installations.
(5) Rectify the turbulent flow by using a rectifier grid.

Cavitation coefficient Kc and pressure recovery coefficient FL

Concentric type butterfly valve
700 and 800 series

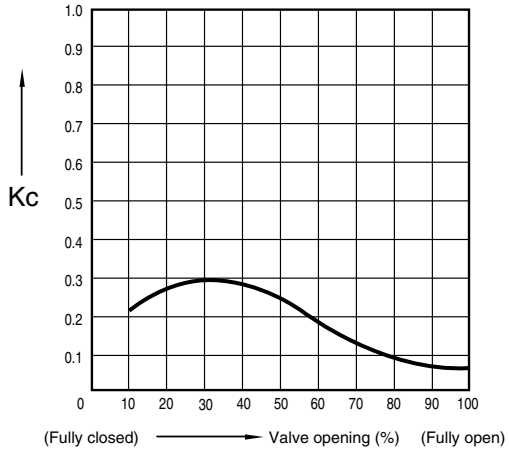

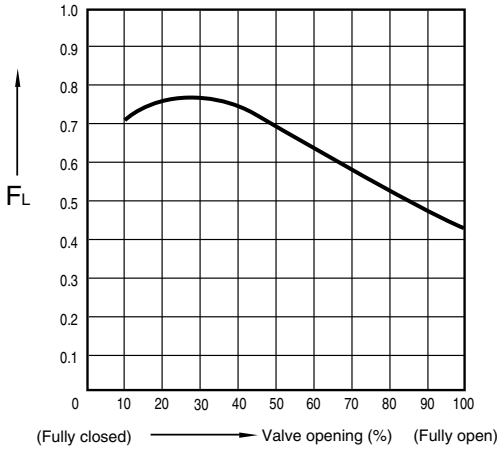

High performance butterfly valve
300 series

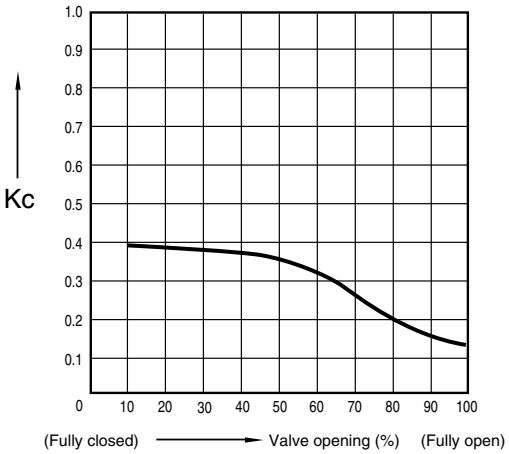

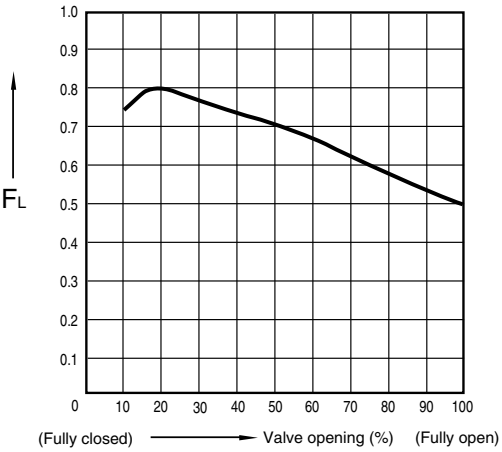

Rotary control valve
507V and 508V types

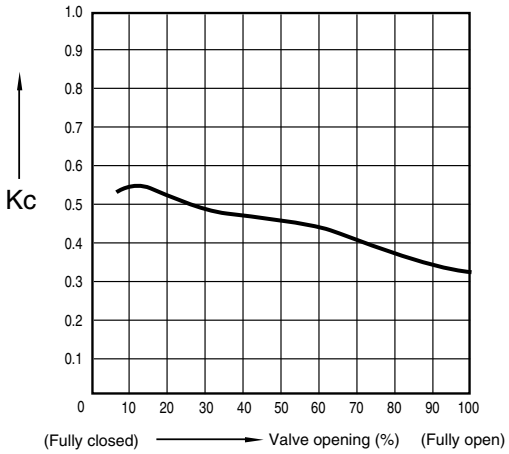

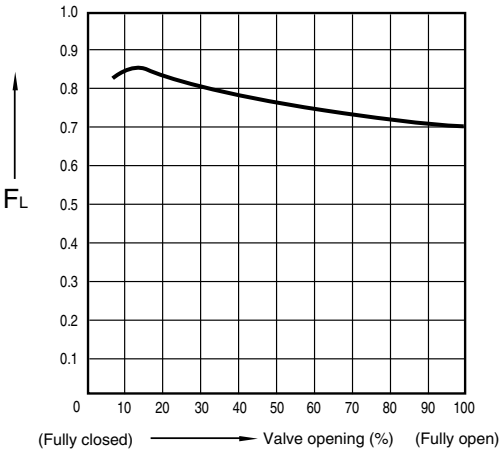

Face to Face Dimensions

Face to face Dimensions

Unit: mm

Series / Diameter	JIS B 2002 Wafer shape for tandard equipment 46		47	Wafer shape for ships 123	API594 Class150	API609 Category B Class150	API609 Category B Class300	JV-8	(Reference: Maker's face-to-face dimension								
40	33	35	—	—	—	—	—	—	—	—	—	—	—	—	35	—	—
50	43	43	—	—	54	—	—	60	56	—	40	40	45	45	35	—	43
65	46	46	—	—	60	—	—	67	56	—	46	—	45	45	35	—	46
80	46	46	—	—	67	48	48	73	60	—	56	40	50	50	40	—	64
100	52	52	—	—	67	54	54	73	66	—	56	40	50	50	40	—	64
125	56	56	—	100	83	—	—	86	70	—	62	—	55	55	45	—	70
150	56	56	—	100	95	57	59	98	76	—	76	52	60	60	50	90	76
200	60	60	—	100	127	64	73	127	95	—	85	62	65	65	60	100	89
250	68	68	—	110	140	71	83	146	108	—	96	89	90	80	—	110	114
300	78	78	—	110	181	81	92	181	144	—	120	89	90	90	—	110	114
350	78	78	92	120	—	92	117	—	—	184	—	89	100	100	—	120	—
400	102	102	102	130	—	102	133	—	—	190	—	108	110	110	—	130	—
450	114	114	114	150	—	114	149	—	—	200	—	—	120	120	—	150	—
500	127	127	127	160	—	127	159	—	—	—	—	—	140	140	—	160	—
600	154	154	154	170	—	154	181	—	—	—	—	—	160	160	—	200	—
Tomoe applicable types	302A/ 304A (80 to 300mm) 302Y/ 304Y 508V 846T/ 847T 731P/ 732P/ 702Z (discontinued)	700Z/ 775Z 700G/ 704G/ 705G	302A/ 304A (350 to 600mm)	722F	906C	334A Class150	334A Class300	MKT	903C/ 904C	901C	337Y	507V	841T/ 842T	700S (discontinued) 700E	700Z (discontinued)	107H/ 108H (discontinued)	337Y/ 338Y (discontinued)

Remark: For detalied dimensions, please refer to the individual dimensional drawings.

Unit Conversion

Cavitation prediction

Conversion from flow rate unit for each type to m^3/h

	m^3/h	Gas m^3/h (at 15℃ 101kPa)
Gas m^3/h	—	×A
Gas m^3/h (at 15℃ 101kPa)	×B	—
kg/h (at 0℃ 101kPa)	÷SG×0.001	×23.63÷MW
kℓ/h	—	×A
t/h (at 0℃ 101kPa)	÷SG	×1000×23.63÷MW
ℓ/h	×0.001	÷0.001×A
ℓ/min.	×0.06	×0.06×A
t/min. (at 0℃ 101kPa)	÷SG×60	×60×1000×23.63÷MW
Lb/h (at 0℃ 101kPa)	×0.4536÷SG×0.001	×0.4536×23.63÷MW
CFH (ft^3/h)	×0.02832	×0.02832×A
SCFH (Nft^3/h)	×0.02832×B	×0.02832
BBL/h (barrel)	×0.159	×0.159×A
BBL/min.	×0.159×60	×0.159×60×A
GPM (gallon/min.)	×0.2271	×0.2271×A
CFM ($ft^3/min.$)	×1.699	×1.699×A
SCFM	×1.699×B	×1.699
Nm^3/h (at 0℃ 101kPa)	$\times T_1 \times 0.1013 \div (P_1 \times 273)$	×288÷273

A = $P_1 \times 288 \div (T_1 \times 0.1013)$
B = $T_1 \times 0.1013 \div (P_1 \times 288)$
SG = Specific gravity

P_1 = Valve inlet pressure (MPaA)
T_1 = Temperature (°K)
MW = Molecular weight

Pressure unit conversion

Conversion from pressure unit for each type to MPaA

	MPa A
kgf/cm^2G	$\times 9.807 \times 10^{-2} + 0.1013$
Bar G	$\times 1 \times 10^{-1} + 0.1013$
Bar A	$\times 1 \times 10^{-1}$
mmH_2O or mmAq	$\times 9.807 \times 10^{-6} + 0.1013$
cmH_2O or cmAq	$\times 9.807 \times 10^{-5} + 0.1013$
mH_2O or mAq	$\times 9.807 \times 10^{-3} + 0.1013$
mmHg or Torr	$\times 1.333 \times 10^{-4}$
cmHg	$\times 1.333 \times 10^{-3}$
atm	$\times 1.013 \times 10^{-1}$
atg	$\times 9.807 \times 10^{-2} + 0.1013$
Pa G	$\times 1 \times 10^{-6} + 0.1013$
kPa G	$\times 1 \times 10^{-3} + 0.1013$
kPa A	$\times 1 \times 10^{-3}$
MPa G	+0.1013
MPa A	–
Lb/in^2 G (psi G)	$\times 6.895 \times 10^{-3} + 0.1013$
Lb/in^2 A (psi A)	$\times 6.895 \times 10^{-3}$
in Hg	$\times 3.386 \times 10^{-3}$

Temp. conversion table

Temperature conversion

$℃ = \frac{5}{9}(°F - 32)$

$°F = \frac{9}{5}℃ + 32$

℃ ←	°F ℃	→ °F
−28.9	−20	−4.5
−26.1	−15	−5.0
−23.3	−10	14.0
−20.6	− 5	23.0
−17.8	0	32.0
−15.0	5	41.0
−12.2	10	50.0
− 9.4	15	59.0
− 6.7	20	68.0
− 3.9	25	77.0
− 1.1	30	86.0
1.7	35	95.0
4.4	40	104.0
7.2	45	113.0
10.0	50	122.0
12.8	55	131.0
15.6	60	140.0
18.3	65	149.0
21.1	70	158.0
23.9	75	167.0
26.7	80	176.0
29.4	85	185.0
32.2	90	194.0
35.0	95	203.0
37.8	100	212.0
43.3	110	230.0
48.9	120	248.0
54.4	130	266.0
60.0	140	284.0
65.6	150	302.0
71.1	160	320.0
76.7	170	338.0
82.2	180	356.0
87.8	190	374.0
93.3	200	392.0
98.9	210	410.0
104.4	220	428.0
110.0	230	446.0
121.1	250	482.0
148.9	300	572.0
176.7	350	662.0
204.4	400	752.0
232.2	450	842.0
260.0	500	932.0
315.6	600	1112.0
317.0	700	1292.0

Pressure conversion table

Pa	kPa	MPa	bar	kgf/cm^2	atm	mH_2O	mHg	Lb/in^2
1	1×10^{-3}	1×10^{-6}	1×10^{-5}	1.02×10^{-5}	9.87×10^{-6}	1.02×10^{-4}	7.5×10^{-6}	1.45×10^{-4}
1×10^3	**1**	1×10^{-3}	1×10^{-2}	1.02×10^{-2}	9.87×10^{-3}	1.02×10^{-1}	7.5×10^{-3}	1.45×10^{-1}
1×10^6	1×10^3	**1**	1×10	1.02×10	9.87	1.02×10^2	7.5	1.45×10^2
1×10^5	1×10^2	1×10^{-1}	**1**	1.02	9.87×10^{-1}	1.02×10	7.52×10^{-1}	1.45×10
9.81×10^4	9.81×10	9.81×10^{-2}	9.81×10^{-1}	**1**	9.68×10^{-1}	1×10	7.7×10^{-1}	1.42×10
1.01×10^5	1.01×10^2	1.01×10^{-1}	1.01	1.03	**1**	1.03×10	7.6×10^{-1}	1.47×10
9.81×10^3	9.81	9.81×10^{-3}	9.81×10^{-2}	1×10^{-1}	9.68×10^{-2}	**1**	7.36×10^{-2}	1.42
1.33×10^5	1.33×10^2	1.33×10^{-1}	1.33	1.3	1.32	1.36×10	**1**	1.93×10
6.89×10^3	6.89	6.89×10^{-3}	6.89×10^{-2}	7.03×10^{-2}	6.8×10^{-2}	7.03×10^{-1}	5.17×10^{-2}	**1**

Torque conversion table

oz·in	Lb·in	Lb·ft	kg·cm	kg·m	N·cm	N·m
1	0.0625	0.005	0.072	0.0007	0.706	0.007
16	**1**	0.083	1.152	0.0115	11.3	0.113
192	12	**1**	13.83	0.138	135.6	1.356
13.89	0.868	0.072	**1**	0.01	9.807	0.098
1389	86.8	7.233	100	**1**	980.7	9.807
14.16	0.088	0.007	0.102	0.001	**1**	0.01
141.6	8.851	0.738	10.20	0.102	100	**1**

Specific gravity conversion

	Condition	Specific gravity G
kg/Nm^3	0 degrees C 1013mmbar	÷1.293
kg/m^3	15 degrees C 1013mmbar	÷1.225

Physical Properties

Physical properties of liquids

Fluid	Boiling point when air pressure is 1		Gravity			Molecular weight
			Temp.		Water = 1 at 4˚C	
	˚C	˚F	˚C	˚F		
Acetaldehyde	20.6	69	20	68	.782	44.05
Acetic acid	118.3	245	20	68	1.049	60.05
Acetone	56.1	133	20	68	.79	58.08
Aero motor oil (typical)	–	–	15.6	60	.895	–
	–	–	–	–	–	–
Alcohol, allyl-n	97.2	207	20	68	.855	58.05
Alcohol, butyl-n	117.2	243	20	68	.81	74.12
	117.2	243	70	158	.78	–
Alcohol, ethyl-n (grain)	77.8	172	20	68	.789	46.07
Alcohol, methy-n (wood)	66.1	151	20	68	.79	102.17
Alcohol, propyl-n	97.2	207	− 17.8	0	.804	60.09
Ammonia (liquid)	− 33.3	− 28	20	68	.662	17.31
Aniline	183.9	363	20	68	1.022	93.12
Automobile crankcase oils,						
SAE 10	–	–	15.6	60	.88 – .94	–
SAE 20	–	–	15.6	60	.88 – .94	–
SAE 30	–	–	15.6	60	.88 – .94	–
SAE 40	–	–	15.6	60	.88 – .94	–
SAE 50	–	–	15.6	60	.88 – .94	–
SAE 60	–	–	15.6	60	.88 – .94	–
SAE 70	–	–	15.6	60	.88 – .94	–
Automobile transmission lub,						
SAE 80	–	–	15.6	60	.88 – .94	–
SAE 90	–	–	15.6	60	.88 – .94	–
SAE 140	–	–	15.6	60	.88 – .94	–
SAE 250	–	–	15.6	60	.88 – .94	–
Beer	–	–	15.6	60	1.01	–
Benzol (Benzene)	80	176	20	68	.879	78.11
Brine, calcium chloride, 25%	–	–	15.6	60	1.23	–
Brine, sodium chloride, 25%	–	–	15.6	60	1.19	–
Bromine	61.1	142	20	68	2.9	159.83
Butyric acid-n	157.8	316	20	68	.959	88.10
Carbolic acid (phenol)	182.2	360	18.3	65	1.08	94.11
Carbon disulphide	46.1	115	20	68	1.263	76.14
Carbon tetrachloride	76.7	170	20	68	1.594	153.84
Castor oil	–	–	20	68	.96	–
Chloroform	61.1	142	20	68	1.489	119.39
Compounded steam cyl oil (5% tal, ow)	–	–	15.6	60	.90	–
	–	–	–	–	–	–
Decane-n	172.8	343	20	68	.73	142.28
Diethyl ether	34.7	94.4	20	68	.714	74.12
Ethyl acetate	77.2	171	20	68	.90	88.10
Ethyl biomide	38.3	101	15	59	1.45	108.98
Ethylene btomide	131.7	269	20	68	2.18	187.88
Ethylene chloride	83.9	183	20	68	1.246	98.97
Formic acid	100.6	213	20	68	1.221	46.03

Physical properties of liquids

Fluid	Boiling point when air pressure is 1		Gravity			Molecular weight
			Temp.		Water = 1 at 4°C	
	°C	°F	°C	°F		
Freon 11	–	–	21.1	70	1.49	–
Freon 12	–	–	26.1	79	1.33	–
Freon 21	–	–	21.1	70	1.37	–
Fuel oil, No.1	–	–	15.6	60	.82 – .95	–
No.2	–	–	15.6	60	.82 – .95	–
No.3	–	–	15.6	60	.82 – .95	–
No.5	–	–	15.6	60	.82 – .95	–
No.6	–	–	15.6	60	.82 – .95	–
Gasoline, typical (a)	–	–	– 14.4	6	.74	–
(b)	–	–	– 14.4	6	.72	–
(c)	–	–	– 14.4	6	.68	–
Glycerine, 100%	290	554	20	68	1.26	92.03
Glycerine and water. 50%	–	–	20	68	1.13	–
Glycol, Ethylene	–	–	20	68	1.125	62.07
Heptane-n	98.3	209	20	68	.684	100.20
Hexane-n	68.9	156	20	68	.66	86.17
Hydrochloric acid, 31.5%	–	–	20	68	1.05	–
Kerosene	–	–	15.6	60	.78 – .82	–
Lard oil	–	–	15.6	60	.91 – .92	–
Linseed oil (raw)	28.1	538	15.6	60	.92 – .94	–
Marine engine oil (20% blown rape)	–	–	15.6	60	.94	–
Methy acetate	57.2	135	20	68	.93	58.08
Methy iodide	42.2	108	20	68	2.28	141.94
Milk	–	–	20	68	1.02 – 1.04	–
Naphthelene	217.8	424	20	68	1.145	–
Neatsfoot oil	–	–	15.6	60	.91 – .92	–
Nitric acid, 60%	–	–	20	68	1.37	–
Nitrobenzene	211.1	412	20	68	1.203	–
Nonane-n	150	302	20	68	.718	128.6
Octane-n	125.6	258	20	68	.70	–
Olive oil	(298.9)	(570)	20	68	.91	–
Pentane-n	36.1	97	20	68	.63	123.11
Petroleum ether (benzine)	–	–	15.6	60	.64	128.25
Propionic acid	141.1	286	20	68	.99	114.22
Quenching oil (typical)	–	–	15.6	60	.86 – .89	–
Rapeseed oil	–	–	20	68	.91	72.09
Soya bean oil	–	–	15.6	60	.924	–
Sperm oil	(98.3)	(209)	25	77	.88	74.08
Sugar, 20%	–	–	20	68	1.08	–
40%	–	–	20	68	1.18	–
60%	–	–	20	68	1.29	–
Sulfuric acid, 100%	337.8	640	20	68	1.83	98.08
95%	–	–	20	68	1.83	–
60%	–	–	20	68	1.50	–
Turbine oil (typical medium)	–	–	15.6	60	.91	–
Turpentine	160	320	15.6	60	.86 – .87	136.23
Water (fresh)	100	212	15.6	60	1.0	–
Water (sea)	–	–	15.6	60	1.03	–
Xyolene-o	141.7	287	20	68	.87	–

Density of fluids

Fluid	Density g°/cm³	Density	Temp. °C
Acetone	0.792	49.4	20
Alcohol, ethyl	0.791	49.4	20
Alcohol, methyl	0.810	50.5	0
Benzene	0.899	56.1	0
Carbolic acid	0.950 – 0.965	59.2 – 60.2	15
Carbon disulfide	1.293	80.7	0
Carbon tetrachloride	1.595	99.6	20
Chloroform	1.489	93.0	20
Ether	0.736	45.9	0
Gasoline	0.66 – 0.69	41.0 – 43.0	—
Glycerin	1.260	78.6	0
Kerosene	0.82	51.2	—
Mercury	13.6	849.0	—
Milk	1.028 – 1.035	64.2 – 64.6	—
Naphtha, petroleum ether	0.665	41.5	15
Wood	0.848 – 0.810	52.9 – 50.5	0
Oils:			
Castor	0.969	60.5	15
Coconut	0.925	57.7	15
Cotton seed	0.926	57.8	16
Creosote	1.040 – 1.100	64.9 – 68.6	15
Linseed, boiled	0.942	58.8	15
Olive	0.918	57.3	15
Sea water	1.025	63.99	15
Turpentine (spirits)	0.87	54.3	—
Water	1.00	62.43	4

Critical pressures and temperatures

Fluid	Critical pressure Pc		Critical temperature Tc	
	kPaA	Bars (abs.)	˚F	˚C
Acetic acid	5798	58.0	612	322
Acetone	4764	47.6	455	235
Acetylene	6280	62.9	97	36
Air	3771	37.8	− 222	− 141
Ammonia	11297	113.0	270	132
Argon	4860	48.6	− 188	− 122
Benzene	4833	48.4	552	289
Butane	3647	36.5	307	153
Carbon dioxide	7390	74.0	88	31
Carbon monoxide	3543	35.5	− 218	− 139
Carbon tetrachloride	4557	45.6	541	283
Chlorine	7708	77.0	291	144
Ethane	4944	49.5	90	32
Ethyl alcohol	6391	64.0	469	243
Ethylene	5115	51.2	50	10
Ethyl ether	3599	36.0	383	195
Fluorine	2530	25.3	− 247	− 155
Helium	228.9	2.29	− 450	− 268
Heptane	2716	27.2	513	267
Hydrogen	1296	13.0	− 400	− 240
Hydrogen chloride	8266	82.6	124	51
Isobutane	3750	37.5	273	134
Isopropyl alcohol	5370	53.7	455	235
Methane	4640	46.4	− 117	− 83
Methyl alcohol	7970	79.6	464	240
Nitrogen	3392	34.0	− 233	− 147
Nitrous oxide	7267	72.7	99	37
Octane	2496	25.0	565	296
Oxygen	5033	50.4	− 182	− 119
Pentane	3344	33.5	387	197
Phenol	6129	61.3	786	419
Phosgene	5674	56.7	360	182
Propane	4254	42.6	207	97
Propylene	4557	45.6	198	92
Refrigerant 12	4012	40.1	234	112
Refrigerant 22	4915	49.2	207	97
Sulfur dioxide	7873	78.8	315	157
Water	22104	221.0	705	374

Physical properties of gases

Fluid	Density kg·m^{-3} (0°C, 101325 Pa)	Gravity Air = 1	Gravity Oxygen = 1	Molecular weight
Acetylene	1.173	0.9073	0.8208	26.04
Air	1.2929	1.0000	.9047	28.97
Ammonia	.7710	.5963	.5395	17.03
Argon	1.7837	1.3796	1.2482	39.944
Arsenic fluoride	7.71*	5.96*	5.40*	169.91
Arsenic hydride	3.484*	2.695*	2.438*	76.93
Boron fluoride	2.99*	2.31*	2.09*	61.82
Butane (n)	2.5190*	2.0854*	1.8868*	58.12
Butane, iso	2.673	2.067	1.870	58.12
Carbon dioxide	1.9769	1.5290	1.3834	44.01
Carbon monoxide	1.2504	.9671	.8750	28.01
Carbon oxysulfide	2.72	2.10	1.90	60.07
Chlorine	3.214	2.486	2.249	70.91
Chlorine dioxide	3.0911	2.3911	2.1611	67.46
Chlorine monoxide	3.89	3.01	2.72	86.91
Cyanogen	2.335*	1.806	1.634*	52.04
Dimethylamine	1.96617	1.52117	1.37617	45.08
Ethane	1.3566	1.0493	.9493	30.07
Ethylene	1.2604	.9749	.8820	28.05
Fluorine	1.696	1.312	1.187	38.00
Germanium hydride (digermane)	6.7420	5.2120	4.7220	151.25
Germanium tetrahydride	3.420	2.645	2.393	76.63
Helium	.17847	.13804	.12489	4.003
Hydrogen	.08988	.06952	.06290	2.016
Hydrogen bromide	3.6445	2.8189	2.5503	80.92
Hydrogen chloride	1.6392	1.2678	1.1471	36.47
Hydrogen iodide	5.7891	4.4776	4.0510	127.93
Hydrogen selenide	3.670	2.839	2.568	80.98
Hydrogen sulfide	1.539	1.190	1.077	34.08
Hydrogen telluride	5.81	4.49	4.07	129.63
Krypton	3.708	2.868	2.595	83.70
Methane	.7168	.5544	.5016	16.04
Methylamine	1.396	1.080	.9769	31.06
Methyl chloride	2.3076	1.7848	1.6148	50.49
Methyl ether	2.1098	1.6318	1.4764	46.07
Methyl fluoride	1.5452	1.1951	1.0813	34.03
Neon	.90036	.69638	.63004	20.18
Nitric oxide	1.3402	1.0366	.9378	30.01

Physical properties of gases

Fluid	Density $kg \cdot m^{-3}$ (0°C, 101325 Pa)	Gravity Air = 1	Gravity Oxygen = 1	Molecular weight
Nitrogen	1.25055	.96724	.87510	28.02
Nitrogen (atm.)	1.2568	.9721	.8795	—
Nitrosyl chloride	2.992	2.314	2.094	65.47
Nitrosyl fluoride	2.176*	1.683*	1.523*	49.01
Nitrous oxide	1.9778	1.5297	1.3840	44.02
Nitroxyl chloride	2.57*	1.99*	1.798*	81.47
Nitroxyl fluoride	2.90	2.24	2.03	65.01
Oxygen	1.42904	1.10527	1.0000	32.00
Ozone	2.144	1.658	1.500	48.00
Phosphine	1.5294	1.1829	1.0702	34.00
Phosphorus fluoride	3.907*	3.022*	2.734*	87.98
Phosphorus oxyfluoride	4.8	3.7	3.4	103.98
Phosphorus pentafluoride	5.81	4.494	4.066	125.98
Propane	2.0096	1.554	1.407	44.09
Radon	9.73	7.526	6.809	222.00
Silicane, chloro-	3.03	2.34	2.12	66.54
Silicane, chloromethyl	3.64	2.82	2.55	80.60
Silicane, dichloromethyl	5.3	4.1	3.7	115.02
Silicane, dimethyl	2.73	2.11	1.91	60.14
Silicane, methyl	2.08	1.61	1.46	46.12
Silicane, trifluoro-	3.86	2.99	2.70	86.07
Silicon fluoride	4.684	3.623	3.278	104.06
Silicon hexahydride	2.85	2.204	1.994	62.17
Silicon tetrahydride	1.44	1.114	1.008	32.09
Stibine (15° C, 754A)	5.30	4.10	3.71	125.00
Sulfur dioxide	2.9269	2.2638	2.0482	64.07
Sulfur fluoride	6.50*	5.03*	4.55*	146.07
Sulfuric oxyfluoride	3.72*	2.88*	2.60*	102.07
Trimethylamine	2.580	1.996	1.085	59.11
Trimethyl boron	2.52	1.95	1.76	55.92
Tungsten fluoride	12.9	9.98	9.03	297.92
Xenon	5.851	4.525	4.094	131.30

* Density at 20°C.

Physical properties of water

Water temperature ˚C	Water temperature ˚F	Vapour pressure kPaA	Gravitational weight kgf/m³	Gravity
0	32	0.6107	999.87	1.00
4	40	0.8385	1000.1	1.00
10	50	1.2268	999.81	1.00
16	60	1.7656	999.18	1.00
21	70	2.5020	998.13	1.00
27	80	3.4353	996.76	1.00
32	90	4.8129	995.10	1.00
38	100	6.5440	993.18	.99
43	110	8.7899	991.03	.99
49	120	11.6699	988.65	.99
54	130	15.3258	986.03	.99
60	140	19.9183	983.24	.98
66	150	25.6346	980.23	.98
71	160	32.6875	977.12	.98
77	170	41.3135	973.81	.97
82	180	51.7811	971.32	.97
88	190	64.3905	966.69	.97
93	200	79.4613	962.91	.96
99	210	97.3653	959.00	.96
100	212	101.313	958.19	.96
104	220	117.994	955.00	.96
116	240	172.136	946.48	.95
127	260	244.235	937.44	.94
138	280	339.192	927.94	.93
149	300	461.942	918.06	.92
177	350	927.974	890.49	.89
204	400	1704.59	859.44	.86
232	450	2913.07	824.50	.82
260	500	4694.25	784.15	.78
288	550	7207.3	736.22	.74
316	600	10639.2	677.66	.68
343	650	15224.8	599.04	.60
371	700	21332.4	437.46	.44

Saturated steam (Based on temperature)

Temp.	Pressure P		Specific volume m^3/kg	
°C	kPaA	mmHg	V′	V″
0	**0.61**	**4.6**	**0.00100022**	**206.305**
2	0.71	5.3	0.00100009	179.923
4	0.81	6.1	0.00100003	157.272
6	0.93	7.0	0.00100004	137.780
8	1.07	8.0	0.00100011	120.966
10	1.23	9.2	0.00100025	106.430
12	1.40	10.5	0.00100044	93.8354
14	1.60	12.0	0.00100069	82.8998
16	1.82	13.6	0.00100099	73.3843
18	2.06	15.5	0.00100133	65.0873
20	2.34	17.5	0.00100172	57.8383
22	2.64	19.8	0.00100216	51.4923
24	2.98	22.4	0.00100263	45.9260
26	3.36	25.2	0.00100315	41.0343
28	3.78	28.3	0.00100371	36.7276
30	4.24	31.8	0.00100431	32.9288
32	4.26	35.7	0.00100493	29.5724
34	5.32	39.9	0.00100560	26.6014
36	5.94	44.6	0.00100631	23.9671
38	6.62	49.7	0.00100704	21.6274
40	7.37	55.3	0.00100781	19.5461
42	8.20	61.1	0.00100861	17.6916
44	9.10	68.3	0.00100943	16.0365
46	10.09	75.6	0.00101030	14.5572
48	11.16	83.7	0.00101119	13.2329
50	12.33	92.5	0.00101211	12.0547
55	15.74	118.1	0.00101454	9.57887
60	19.92	149.4	0.00101714	7.67854
65	25.01	187.6	0.00101991	6.20228
70	31.16	233.7	0.00102285	5.04627
75	38.55	289.1	0.00102594	4.13410
80	47.36	355.2	0.00102919	3.40909
85	57.80	433.6	0.00103259	2.82881
90	70.10	525.9	0.00103614	2.36130
95	84.52	634.0	0.00103985	1.98222
100	101.32	760.0	0.00104371	1.67300
105	120.79	906.1	0.00104771	1.41928
110	143.26	1074.6	0.00105187	1.20994
120	198.53	1489.2	0.00106063	0.891524
130	270.12	2026.2	0.00107002	0.668136
140	361.35	2710.6	0.00108006	0.508494
150	475.96		0.00109078	0.392447
160	618.02		0.00110222	0.306756
170	791.97		0.00111445	0.242553
180	1002.57		0.00112752	0.193800
190	1255.07		0.00114150	0.156316
200	1554.74		0.00115649	0.127160
210	1907.66		0.00117260	0.104239
220	2319.71		0.00118995	0.0860378
230	2797.46		0.00120872	0.0714498
240	3347.57		0.00122908	0.0596544
250	3977.31		0.00125129	0.0500374
260	4694.03		0.00127563	0.0421338
270	5505.48		0.00130250	0.0355880
280	6419.79		0.00133239	0.0301260
290	7445.60		0.00136594	0.0255351
300	8592.12		0.00140406	0.0216487
310	9869.74		0.00144797	0.0183339
320	11288.67		0.00149950	0.0154798
330	12861.55		0.00156147	0.0129894
340	14604.08		0.00163871	0.0107804
350	16533.90		0.00174112	0.0087991
360	18673.57		0.0018599	0.0069398
370	21052.50		0.0022136	0.0049727
374.15	22118.41		0.0031700	0.0031700

Saturated steam (Based on pressure)

Pressure P		Temp.	Specific volume m^3/kg	
kPaA	mmHg	°C	V′	V″
0.98	7.4	6.699	0.00100006	131.62401
1.96	14.7	17.204	0.00100119	68.2556
3.92	29.4	28.645	0.00100390	35.4496
5.88	44.1	35.83	0.00100625	24.1820
7.84	58.8	41.16	0.00100872	18.4405
9.81	73.6	45.45	0.00101006	14.9467
19.61	147.1	59.66	0.00101696	7.79127
29.42	220.7	68.68	0.00102206	5.32592
39.22	294.2	75.42	0.00102621	4.06715
49.03	367.8	80.86	0.00102976	3.30001
58.84	441.3	85.45	0.00103291	2.78214
78.45	588.4	92.99	0.00103834	2.12544
98.06	735.6	99.09	0.00104299	1.72495
101.32	760.0	100.00	0.00104371	1.67300
147.09	1103.3	110.79	0.00105253	1.18041
196.12	1471.1	119.61	0.00106028	0.901776
294.18	2206.7	132.88	0.00107284	0.616754
392.24	2942.2	142.92	0.00108312	0.470785
490.30	3677.8	151.11	0.00109202	0.381632
588.36	4413.4	158.08	0.00109997	0.321345
686.42		164.17	0.00110723	0.277768
784.48		169.61	0.00111396	0.244751
882.54		174.53	0.00112026	0.218840
980.60		179.04	0.00112622	0.197945
1176.72		187.08	0.00113732	0.166284
1372.84		194.13	0.00114757	0.143394
1568.96		200.43	0.00115717	0.126047
1765.08		206.15	0.00116525	0.112434
1961.20		211.39	0.00117493	0.101455
2157.32		216.24	0.00118327	0.0924081
2353.44		220.76	0.00119133	0.0848196
2549.56		224.9	0.00119913	0.0783601
2745.68		228.98	0.00120674	0.0727929
2941.80		232.76	0.00121417	0.0679431
3137.92		236.35	0.00122145	0.0636793
3334.04		239.77	0.00122859	0.0599001
3530.16		243.04	0.00123562	0.0565266
3726.28		246.17	0.00124255	0.0534959
3922.40		249.18	0.00124938	0.0507578
4118.52		252.07	0.00125615	0.0482713
4314.64		254.86	0.00126284	0.0460028
4510.76		257.56	0.00126947	0.0439246
4706.88		260.17	0.00127606	0.0420132
4903.0		262.69	0.00128260	0.0402491
5393.3		268.69	0.00129882	0.0363798
5883.6		274.28	0.00131489	0.0331317
6373.9		279.53	0.00133089	0.0303641
6864.2		284.47	0.00134689	0.0279761
7844.8		293.61	0.00137912	0.0240593
8825.4		301.91	0.00141194	0.0209758
9806.0		309.53	0.00144575	0.0184791
10786.6		316.58	0.00148088	0.0164099
11767.2		323.15	0.00151774	0.0146594
12747.8		329.31	0.00155677	0.0131514
13728.4		335.10	0.00159853	0.0118316
14709.0		340.57	0.00164374	0.0106617
15689.6		345.75	0.00169345	0.0096151
16670.2		350.67	0.0017491	0.0086722
17650.8		355.35	0.0018139	0.0077945
18631.4		359.81	0.0018921	0.0069743
19612.0		364.07	0.0019902	0.0061872
20592.6		368.15	0.0021242	0.0053845
21573.2		372.05	0.0023668	0.0044231
22118.41		374.15	0.0031700	0.0031700

This data is provided by the Japan Mechanical Society.

Flange Standards

Nominal pressure 5K steel flange reference dimensions (JIS B2238-1996)

Nominal diameter		Flange outer diameter (mm)	Thickness (mm)	Bolt hole			Bolt nominal screw designation
mm	inch			Center diameter (mm)	Number	Diameter (mm)	
40	1 1/2	120	12	95	4	15	M12
50	2	130	14	105	4	15	M12
65	2 1/2	155	14	130	4	15	M12
80	3	180	14	145	4	19	M16
100	4	200	16	165	8	19	M16
125	5	235	16	200	8	19	M16
150	6	265	18	230	8	19	M16
200	8	320	20	280	8	23	M20
250	10	385	22	345	12	23	M20
300	12	430	22	390	12	23	M20
350	14	480	24	435	12	25	M22
400	16	540	24	495	16	25	M22
450	18	605	24	555	16	25	M22
500	20	655	24	605	20	25	M22
550	22	720	26	665	20	27	M24
600	24	770	26	715	20	27	M24
650	26	825	26	770	24	27	M24
700	28	875	26	820	24	27	M24
750	30	945	28	880	24	33	M30
800	32	995	28	930	24	33	M30
850	34	1045	28	980	24	33	M30
900	36	1095	30	1030	24	33	M30
1000	40	1195	32	1130	28	33	M30
1100	44	1305	32	1240	28	33	M30
1200	48	1420	34	1350	32	33	M30
1350	54	1575	34	1505	32	33	M30

Nominal pressure 10K steel flange reference dimensions (JIS B2238-1996)

Nominal diameter		Flange outer diameter (mm)	Thickness (mm)	Bolt hole			Bolt nominal screw designation
mm	inch			Center diameter (mm)	Number	Diameter (mm)	
40	1 1/2	140	16	105	4	19	M16
50	2	155	16	120	4	19	M16
65	2 1/2	175	18	140	4	19	M16
80	3	185	18	150	8	19	M16
100	4	210	18	175	8	19	M16
125	5	250	20	210	8	23	M20
150	6	280	22	240	8	23	M20
200	8	330	22	290	12	23	M20
250	10	400	24	355	12	25	M22
300	12	445	24	400	16	25	M22
350	14	490	26	445	16	25	M22
400	16	560	28	510	16	27	M24
450	18	620	30	565	20	27	M24
500	20	675	30	620	20	27	M24
550	22	745	32	680	20	33	M30
600	24	795	32	730	24	33	M30
650	26	845	34	780	24	33	M30
700	28	905	34	840	24	33	M30
750	30	970	36	900	24	33	M30
800	32	1020	36	950	28	33	M30
850	34	1070	36	1000	28	33	M30
900	36	1120	38	1050	28	33	M30
1000	40	1235	40	1160	28	39	M36
1100	44	1345	42	1270	28	39	M36
1200	48	1465	44	1380	32	39	M36
1350	54	1630	48	1540	36	45	M42

Nominal pressure 16K steel flange reference dimensions (JIS B2238-1996)

Nominal diameter		Flange outer diameter (mm)	Thickness (mm)	Bolt hole			Bolt nominal screw designation
mm	inch			Center diameter (mm)	Number	Diameter (mm)	
40	1 1/2	140	16	105	4	19	M16
50	2	155	16	120	8	19	M16
65	2 1/2	175	18	140	8	19	M16
80	3	200	20	160	8	23	M20
100	4	225	22	185	8	23	M20
125	5	270	22	225	8	25	M22
150	6	305	24	260	12	25	M22
200	8	350	26	305	12	25	M22
250	10	430	28	380	12	27	M24
300	12	480	30	430	16	27	M24
350	14	540	34	480	16	33	M30×3
400	16	605	38	540	16	33	M30×3
450	18	675	40	605	20	33	M30×3
500	20	730	42	660	20	33	M30×3
600	24	845	46	770	24	39	M36×3

Nominal pressure 20K steel flange reference dimensions (JIS B2238-1996)

Nominal diameter		Flange outer diameter (mm)	Thickness (mm)	Bolt hole			Bolt nominal screw designation
mm	inch			Center diameter (mm)	Number	Diameter (mm)	
40	1 1/2	140	18	105	4	19	M16
50	2	155	18	120	8	19	M16
65	2 1/2	175	20	140	8	19	M16
80	3	200	22	160	8	23	M20
100	4	225	24	185	8	23	M20
125	5	270	26	225	8	25	M22
150	6	305	28	260	12	25	M22
200	8	350	30	305	12	25	M22
250	10	430	34	380	12	27	M24
300	12	480	36	430	16	27	M24
350	14	540	40	480	16	33	M30×3
400	16	605	46	540	16	33	M30×3
450	18	675	48	605	20	33	M30×3
500	20	730	50	660	20	33	M30×3
600	24	845	54	770	24	39	M36×3

Nominal pressure 30K steel flange reference dimensions (JIS B2238-1996)

Nominal diameter		Flange outer diameter (mm)	Thickness (mm)	Bolt hole			Bolt nominal screw designation
mm	inch			Center diameter (mm)	Number	Diameter (mm)	
50	2	165	22	130	8	19	M16
65	2 1/2	200	26	160	8	23	M20
80	3	210	28	170	8	23	M20
100	4	240	32	195	8	25	M22
125	5	275	36	230	8	25	M22
150	6	325	38	275	12	27	M24
200	8	370	42	320	12	27	M24
250	10	450	48	390	12	33	M30×3
300	12	515	52	450	16	33	M30×3

ANSI class 150 steel flange reference dimensions (ANSI/ASME B16.5-1996)

Nominal diameter		Flange outer diameter (mm)	Thickness (mm)	Bolt hole			Bolt nominal screw designation
mm	inch			Center diameter (mm)	Number	Diameter (mm)	
40	1 1/2	127	17.5	98.5	4	16	U1/2-13UNC
50	2	152	19.1	120.6	4	20	U5/8-11UNC
65	2 1/2	178	22.3	139.7	4	20	U5/8-11UNC
80	3	191	23.9	152.4	4	20	U5/8-11UNC
100	4	229	23.9	190.5	8	20	U5/8-11UNC
125	5	254	23.9	215.9	8	23	U3/4-10UNC
150	6	279	25.4	241.3	8	23	U3/4-10UNC
200	8	343	28.6	298.4	8	23	U3/4-10UNC
250	10	406	30.2	361.9	12	26	U7/8- 9UNC
300	12	483	31.8	431.8	12	26	U7/8- 9UNC
350	14	533	35.0	476.2	12	29	U1 - 8UNC
400	16	597	36.6	539.7	16	29	U1 - 8UNC
450	18	635	39.7	577.8	16	32	U1 1/8-8UN
500	20	698	42.9	635.0	20	32	U1 1/8-8UN
600	24	813	47.7	749.3	20	35	U1 1/4-8UN

ANSI class 300 steel flange reference dimensions (ANSI/ASME B16.5-1996)

Nominal diameter		Flange outer diameter (mm)	Thickness (mm)	Bolt hole			Bolt nominal screw designation
mm	inch			Center diameter (mm)	Number	Diameter (mm)	
50	2	165	22.3	127.0	8	20	U5/8-11UNC
65	2 1/2	191	25.4	149.4	8	23	U3/4-10UNC
80	3	210	28.6	168.1	8	23	U3/4-10UNC
100	4	254	31.8	200.2	8	23	U3/4-10UNC
125	5	279	35.0	235.0	8	23	U3/4-10UNC
150	6	318	36.6	269.7	12	23	U3/4-10UNC
200	8	381	41.3	330.2	12	26	U7/8- 9UNC
250	10	444	47.7	387.4	16	29	U1 - 8UNC
300	12	521	50.8	450.9	16	32	U1 1/8-8UN



Note:

- We will not take any responsibility for casualties or property damages caused by improper use of the products exceeding applicable range indicated in this catalog.
- The products are subject to be discontinued or redesigned without notice.
- This catalog may be revised without notice.
- All the contents of this catalog is protected by copyrights, and any unauthorized reproduction is strictly prohibited.

GENERAL CATALOG

Valves & Actuator Selection Guide

TOMOE VALVE CO., LTD. www.tomoevalve.com

●**Head Office**
3-11-11 Shinmachi, Nishi-ku, Osaka 550-0013, Japan
Telephone: +81-6-6110-2101/2102/2103 Telefax: +81-6-6110-2105/2106 E-mail:sales@tomoevalve.com

Global Sales Operations

SHANGHAI TOMOE VALVE CO., LTD.
No.2755 Bao An Road, Malu Town, Jiading District Shanghai 201801, China
Telephone: +86-21-69155067 Telefax: +86-21-69155068

TOMOE VALVE ASIA PACIFIC PTE. LTD. www.tomoe.com.sg/index.php
No 2, International Business Park, The Strategy, Tower 2, #03-27 609930, Singapore
Telephone: +65-68995060 Telefax: +65-68995061 E-mail:sales@tomoe.com.sg

TOMOE VALVE LIMITED www.tomoeeurope.co.uk
Clearwater Road, Queensway Meadows Industrial Estate, Newport, South Wales NP19 4ST, United Kingdom
Telephone: +44-1633-636800 Telefax: +44-1633-636801 E-mail:sales@tomoe.co.uk

TOMOE USA Inc.
14411 Inter Drive West, Houston, Texas 77032, USA
Telephone: +1-281-351-7571 Telefax: +1-281-358-7861

PT. TOMOE VALVE BATAM www.tomoe-batam.com
Block F2 Latrade Industrial Park, Tanjung Uncang, Batam Kepulauan Riau 29422, Indonesia
Telephone: +62-778-395466 Telefax: +62-778-396475

Cat.No.EC1072-② | 2015.06.01-3Yn